Organization for Relief Development (ORD)

INVITATION TO BID

ITB No:. AFG/ORD/19/09

Bid Documents for

Construction of Water Supply Network

(Pipe Scheme)

in Khatoon qala village, Jawzjan and Cheelangum village, Sar-e- Pul Provinces, Afghanistan

DATE: 02 May, 2019

(Deadline for Submission of Bid): 19 May 2019, 16:00hr (Afghanistan local time).

REQUIRED SEALED BIDS IN TWO ENVELOPES MARKED,

"TECHNICAL BID" AND "FINANCIAL BID"

IN SEPARATE ENVELOPES

Please ensure to sign the registration sheet at the ORD office while submitting sealed Bid!

Subject: Invitation to Bid

Projects Name: Construction of water supply network (Pipe Scheme).

Invitation to Bid No.: AFG/ORD/19/09

Location: Jawzjan and Sar-e- Pul provinces.

Date: May 02, 2019

I. INTRODUCTION:

1. The Introduction of ORD

Organization for Relief Development-ORD is non-governmental, non-profit and non-political Organization that has been established in 2010, registered in Afghanistan Kabul, with the Islamic Republic of Afghanistan. ORD plays a critical role in providing management services for peace building, humanitarian assistance and development operations. These activities help suffering people in troubled parts of the Afghanistan. ORD's mission is to expand the capacity of its partners to implement peace building, humanitarian and development operations that matter for people in need. Working in some of the Afghanistan's most challenging environments, ORD vision is to always satisfy stakeholders with management services that meet better standards of quality, speed and cost effectiveness. By assisting its development partners, ORD makes significant, tangible contributions to results on the ground.

2. Invitation to Bid:

The Organization for Relief Development (ORD) is implementing partner of the Office of the United Nations High Commissioner for Refugees (UNHCR) for the above mentioned project (part of the Access to Opportunities & Support PSN with implementation of CPM projects in N/NE regions).

The Organization for Relief Development-ORD invites companies duly registered with the government of Afghanistan to submit sealed bid for the above mentioned project "construction of water supply network (Pipe Scheme)" on the basis of the following terms and conditions.

3. Acknowledge:

You are kindly requested to confirm by an email to: procurement.ord@gmail.com that you will be submitting a bid.

4. Eligible Bidders:

4.1 This Invitation for Bids is open for all interested companies who have registered with the government of Afghanistan and have valid license.

4.2 The company, organization or individual is not listed in the sanction and embargo list of the UN Security Council1.

4.3 The company, organization or individual is not legally barred from the procurement process on the grounds of previous violations of regulations on fraud and corruption.

4.4 The company, organization or individual to will not be contracted for considerable portions of the contract is an enterprise economically intertwined with persons conducting the tender.

4.5 The bidder shall be an Afghan company registered with the government of Afghanistan.

5. Cost of Bidding

The bidders shall bear all costs associated with the preparation and submission of their respective bids and the Employer will in no case be responsible or liable for those costs, regardless of the conduct or outcome of the bidding process.

6. Period of performance:

All works for this project shall be completed within 96 calendar days after date of singing of the contract.

II. Bidding Documents:

1. Bidding Documents

The Bidding Documents, in addition to invitation for bids, are those stated below and all documents shall be signed /stamped by the bidder or his legally authorized representative and returned to the address according to the Bidding Data Sheet.

(a) Invitation to Bid (applied to this document)
(b) Criteria for Technical Bid of the Annex -1
(c) Bid Form in accordance of the annex - 2
(d) Declaration of undertaking in accordance of the annex -3.
(e) Price offering Sheet (Bill of Quantities) in accordance of annex - 4.
(f) Drawings of the annex - 5
(g) Additional a copy of each Circular Letter issued to bidders by the Employer (if applicable). The Bidder must endorse each copy of such Circular Letter.

Prices must be quoted for all items in the Bill of Quantities.

The bidders are expected to examine carefully the contents of all the above documents.
Failure to comply with the requirements of bid submission will be at the Bidder's own risk, bids that are not substantially responsive to the requirements of the Bidding Documents will be rejected.

2. Clarification of Bidding Documents

Any prospective bidder requiring any clarification in respect of the Bidding Documents may notify the Employer in writing at procurement.ord@gmail.com.The request for clarification must reach the Employer not later than 5 days before the closing date of the bid. The Employer will respond to any request for clarification which he receives earlier than 5 days prior to the deadline for submission of bids.

The Employer will respond by e-mail providing clarification on the bidding documents. Written copies of the Employer's response including a description of the enquiry but without identifying its source will be communicated to all prospective Bidders, who had received the bidding documents and acknowledged their participation to the above mentioned email.

III. PREPARATION OF BID:

1. Language of Bid

The bid and all correspondence and documents related to the bid exchanged by a bidder and the Employer shall be in English language only as specified in the Bidding Data (BD).

2. Documents Comprising the Bid

The bid documents should be enclosed two parts (i) Technical bid and (ii) Financial bid and must be submitted separately in two sealed envelopes.

The submitted bid must include the following formation. Failure to supply all requested information or comply with the specific formats may disqualify the bidder from consideration.

1. Bid Form in accordance of the annex - 2.
2. Declaration of undertaking in accordance of the annex - 3.
3. Copy of valid business license.
4. Past Performance and experience (list and copy of contract for similar completed projects).
5. Proposed time schedule and the timeframe that the contractor should be completed the project.
6. List of machinery and equipment of the company.
7. List of qualification and experience of the key and technical personnel of the company.
8. Financial capability.
9. Other important documents, bidders feel need to be attached to support their bid.

3. Bid Prices

3.1 All prices shall be stated with applicable tax (in accordance with the current tax laws of the Islamic Republic of Afghanistan, and all other relevant provisions of the same law).

3.2 All unit prices shall be indicated in the spaced provided in the price sheet (BoQ). The bidder must sign and officially stamp the price sheet.

4. Bid Currencies

The offer should follow the given structure and prices shall be quoted in Afghani (AFN) as specified in the Bidding Data sheet (BD).

5. Bid Validity Period

Bids shall be valid for 90 days after the Date of Bid Opening specified in the BD.

In exceptional circumstances, prior to expiry of the original bid validity period, the Employer may request that the bidders extend the period of validity for a specified additional period which shall in no case be more than the original bid validity period. The request and the responses there to shall be made in writing.

7. Bid Security

Bid Security equal amount is (120,000 AFN) must provide in a form of Bank Guarantee from a recognized Bank of Afghanistan, otherwise bidders will be disqualified for the technical evaluation.

8. Format and Signing of Bid

8.1 Bidders are particularly directed that the amount entered on the Form of Bid shall be for performing the Contract strictly in accordance with the Bidding Documents.

8.2 All appendices to Bid are to be properly completed, signed and stamped.

8.3 Each bidder shall prepare by filling out the forms completely and without alterations one

(1) Original specified in the Bidding Data, of the documents comprising the bid and clearly mark them "ORIGINAL"

8. Alternative Bid

Alternative bids are not allowed to be attached.

IV. SUBMISSION OF BID:

1. Deadline for submission of bid:

a. The closing date for submission of bids is:

The 19th of May 2019, 16:00h (Afghanistan local time). Late bids shall be rejected and electronic submission is not allowed.

b. Bids must be received by the Employer at the address specified no later than the deadline.

c. Bids with charge payable will not be accepted, nor will arrangements be undertaken to collect the bids from any delivery point other than that specified above. Bidders shall bear all expenses incurred in the preparation and delivery of bids. No claims will be entertained for refund of such expenses.

d. Where delivery of a bid is by mail and the bidder wishes to receive an acknowledgment of receipt of such bid, he/she shall make a request for such acknowledgment in a separate letter attached to but not included in the sealed bid package.

2. Submission, Sealing and Marking of Bids:

Technical bid and the Price bid must be submitted separate sealed envelopes.
The signed and stamped bid one original including with its all attachments shall be submitted in a sealed envelope.
The envelope of your bidding documents shall be marked as following:

a. Bidding documents - Technical Bid for:
Construction of water supply network (Pipe Scheme) in Jawz Jan and Sar-e-Pul provinces

b. Bidding documents - price Bid for:
Construction of water supply network (Pipe Scheme) Jawz Jan and Sar-e-Pul provinces
Invitation to Bid No.: AFG/ORD/19/09

3. The Employer's address for submission of bids is:

ORD Regional Office, Mazar-e-Sharif, House # 176, Street # 2 Toman, Barakat Square,
district -4, Mazar-e-Sharif (city), Afghanistan.

9. Modification, Substitution and Withdrawal of Bids

The bidder may modify, or withdraw its bid after bid's submission, provided that the written notice of the modification, including substitution or withdrawal of the bids, received by the Employer prior to the deadline for submission of bids.

The Bidder's modification or withdrawal notice shall be prepared, sealed, marked, and dispatched. No bid may be modified by a bidder after the deadline for submission of bids.

V. BID OPENING AND EVALUATION:

1. Bid Opening:

The opening of the bid will be held with ORD members only. The bid opening will take place at:

ORD Regional Office, Mazar-e-Sharif:

2. Process to be Confidential

Information relating to the examination, clarification, evaluation and post-qualification of bids and recommendations for the award of a contract shall not be disclosed to bidders or any other person not officially concerned with such process before the announcement of bid evaluation report.

Any effort by a bidder to influence ORD in the examination, evaluation, comparison, and post qualification of the bids or contract award decisions may result in the rejection of its bid.

3. Examination of Bids and Determination of Responsiveness

Prior to the detailed evaluation of bids, the Employer will determine whether each bid is substantially responsive to the requirements of the Bidding Documents.

A substantially responsive bid is one, which meets the eligibility criteria; has been properly signed; and conforms to all the terms, conditions and specifications of the Bidding Documents, without material deviation or reservation.

4. Evaluation and Comparison of Bid:

Bids will be evaluated in accordance with the following technical criteria:

Eligibility of Bids for Evaluation Process:

#	Eligibility Terms	Yes	No
1	Bidders must have a valid business license registered with Ministry of Commerce.		
2	Bank account under company name.		

Technical Criteria for Award:

#	Parameter	Scoring %
1.0	**Past Performance/ Work experience:** List of ongoing and completed projects with provable evidence documents. (At least one of the completed project value shall not be less than 100,000.00 USD in last three years).	10
2.0	**Similar Projects:** Completed at least 2 similar projects in water supply network (Pipe Scheme) with indication of provable evidence documents in the past three years).	10
3.0	**work plan (time schedule):** Provide a comprehensive work plan / time schedule for implementation of the intended project.	10

4.0	**Machinery and Equipment:** The bidder must submit details of the available technical equipment and machinery with submission of the provable evidences as it is own or rented including its purchase agreements, manufacturing of equipment.	10
5.0	**Technical Staff:** Bidder must submit suitably qualified personnel to fill as a minimum the following the key and technical positions in the last three years and their Certificates and CV's.	5
6.0	**Revenues**: Average revenues of the last three years reach at least 100,000.00 USD.	5
7.0	**Financial Capability:** The bidder must submit updated original bank statement which should show source of the support project, which implemented by related construction company. If bank statement is not original otherwise the scoring will be deduct.	10
	Total	**60**

Financial Bid:

1.0	Price bid as per the price sheet (lowest bid price) but technically is acceptable	40
	Total	**40**

4. Notification of Award

Prior to the expiration of the period of bid validity, the Employer will notify the successful bidder in writing or where necessary by phone that his/her bid has been accepted.

VI. BIDDING DATA SHEET (BDS):

A. General	
1.1	The Employer is Organization for Relief Development (ORD). The Work is: Construction of water supply network (Pipe Scheme) Jawz Jan and Sar-e-Pul provinces
1.2	The project is funded by: Office of the United Nations High Commissioner for Refugees (UNHCR).
1.3	The Intended Completion period is 96 calendar days from date of signing of contract.
1.4	The qualification criteria are modified in technical criteria.
B. Bidding Documents	
2.1	The Employer's address for clarification is: ORD Regional Office, Mazar-i-Sharif, House # 176, Street# 2 Toman, Barakat Square, district-4, Mazar-i-Sharif Afghanistan Phone No.: + 93 (0) 78 283 7700 E-mail add: procurement.ord@gmail.com
2.2	All questions in regard to that tender please send in written no later than 5 days before the closing date of the bid.

C. Preparation of Bids	
3.1	The language of the bid shall be English.
3.2	Any additional materials required to completed and submitted by the Bidders are: **None**
3.3.	The Bid prices shall be quoted in **Afghani** (AFN)
3.4	**The bid shall be valid for 90 days**
3.5	The number of copies of the Bid to be completed and returned shall be one original and one copy (comprising all sections of the bid).
3.6	Alternative Bids shall not be considered.
D. Submission of Bids	
4.1	Bids received by fax and electronically shall not be accepted.
4.2	The Employer's address for the purpose of Bid submission is: ORD Regional Office, Mazar-i-Sharif, House #176, Street #2 Toman, Barakat Square, district-4, Mazar-i-Sharif (city), Afghanistan.
4.3	Name and code of the project has given in ITB.
4.4	**The closing date for submission of bid is:** **19th of May 2019, 16:00h** (Afghanistan local time).
4.5	Late bids shall be rejected.
E. Bid Opening	
5.1	The bid opening will take place at: ORD Regional Office in Mazar-i-Sharif.
F. Evaluation of Bids	
6.1	Technical Evaluation: Bids shall be evaluated accordance with the given technical criteria in ITB. Bidders who pass in the technical through will be qualify for the financial.
6.2	The financial evaluation shall be execute according to the given criteria in ITB
E. Award of Contract	
7.1	Prior to the expiration of the period of bid validity, ORD shall send the successful bidder the contract / purchase order which constitute the notification of award.
Performance Guarantee	
7.2	Standard form amount of performance bond acceptable the employer shall be a Bank Guarantee. The successful bidder shall furnish to the Employer a performance Bond in the form of with the amount of 10 % value of the contract.

Attachments:

Annex 1: Technical Criteria / Post Qualification

Annex 2: Bid Form

Annex 3: Declaration of Undertaking

Annex 4: Bill of Quantity (Price Sheet)

Annex 5: Drawings

Annex-1

Criteria for Technical Bid

All bidders shall provide the technical Bid and bids will be evaluated in accordance with the below technical criteria as:

1. Bidder must be a registered with the government of Afghanistan (evidence of the updated valid business license is mandatory).
2. Bidder must provide documented evidence of three (2) years of similar experience in Implementation in construction of water supply network (Pipe Scheme) as a prime contractor. Provide a list of similar projects completed by bidder that include the items set forth.

a. The name and location of each such project.
b. The owner of each such project and its contact information.
c. The scope of work of each such project.
d. The date the work began.
e. The scheduled completion date.
f. The actual completion date.
g. The contract amount of the supply work.
h. Copy of contracts or completion certificate.

3 Bidder must provide documented evidence of successfully completed similar works, materials equipment/tools that included vertical similar to the size and scope of this proposed project. Include a list of projects meeting this criterion.
4. Bidder must provide the list of key and technical staff and qualification of them with their CVs.
5. Proposed Time Schedule (work plan) for implementation of the intended project.
6. Company financial capability. Bidder shall provide evidence that they have access to financial resources, to this end; bidder shall provide specific evidence, in form of Bank Letters and / or notarized statements and / or other information, to show that this requirement is met.
7. Bidder must provide documented technical machinery and equipment for implementation of the projects.
8. Even though the bidders may meet the above qualifying criteria, they can be subject to disqualification if they have made misleading or false representations in the forms, statements and attachments submitted in proof of the qualification requirements, and /or record of poor performance such as, not properly completing contract, inordinate delays in completion, litigation history, financial failures, etc.

Technical Bid Forms

The Bidder should provide the requested information / documents as per the below provided tables.

1. Contact Information

Contact Information	
Name of Company	
Contact Person	
Physical Address Street City Province	
Telephone Numbers	
E-mail address (mandatory)	
Signature of contact person	

2. Additional offices – List all additional regional / district offices:

Province	District	City/area

3. Company Registration License

Number:

Issue date:

Expiry date:

Note: copy of current company business license (front & back) shall be attached.

4. Bank Account Details – Name of commercial bank used:

Address:

Name of account:

Account #:

5. **Organization History –** Company was founded in (year): _____

Technical Competence & Resources

6. **Personnel Resources** – Please list your organization's key personnel in the below tables **Table (1):**

1.1 Number of Staff:

	Managerial	**Technical**	**Operative**	**Administrative**	**Other (specify)**
Nos.					

1.2 List the key and technical staff (not more than five persons)

Key and technical Personnel				
No	Name	Position	Date of Joining company	Year of Experience

Proposed staff for completion of the intended project			
Name	title	Years with company	Experience & Job responsibility

7. **Staff CVs** – Please provide your company organization chart and CVs for all key and technical personnel (CVs for the listed personnel in Table 1.2 is mandatory).

1	Name:	
2	Gender	
3	Date of Birth:	
4	Nationality	
5	Position in the organization:	

6	Education	
7	Professional affiliation/membership of professional bodies.	
8	Professional trainings (Indicate significant training since degrees under 7/above)	
9	Language skills	
10	Work experience [Starting with present position, list in reverse order with name of organization and position held by staff)	

8. Equipment and Machinery: please provide the list with submission of provable evidence.
Table (3)

Equipment					
Type / Description / Model	Size /Capacity	Number	Current Location	Own or Leased	Age

Note: add additional row if needed.

Experience& Satisfactory Experience

9. Works Experience–List at minimum 3 to maximum 6 projects, which has completed and under construction by your company (including at minimum 2 similar projects over the past three or five years).

For ongoing projects, copy of contract needed and for those projects, which are already completed the completion certificate must be provided – or documents which indicates that work was successfully completed.

Table (4)

1. Project Name	
Type of Contract/Agreement	
Description	
Location	Province: District:
Client	Name: Tell: Email(official):
Value	Award Value: Paid amount:
Start / End Dates	Start: End:
Completion	On Schedule ( ) yes ( ) no Certificate of Completion: ( ) yes ( )no
Comments	

2. Project Name	
Type of Contract/Agreement	
Description	
Location	Province: District:
Client	Name: Tell: Email (official):
Value	Award Value: Award Value:
Start / End Dates	Start: End:
Completion	On Schedule ( ) yes ( ) no Certificate of Completion: ( ) yes ( )no
Comments	

3. Project Name	
Type of Contract/Agreement	
Description	
Location	Province: District:
Client	Name: Tell: Email (official):

Value	Award Value: Paid amount:
Start / End Dates	Start: End:
Completion	On Schedule ( ) yes ( ) no Certificate of Completion: ( ) yes ( )no
Comments	

4. Project Name	
Type of Contract/Agreement	
Description	
Location	Province: District:
Client	Name: Tell: Email (official):
Value	Award Value: Paid amount:
Start / End Dates	Start: End:
Completion	On Schedule ( ) yes ( ) no Certificate of Completion: ( ) yes ( )no
Comments	
5. Project Name	
Type of Contract/Agreement	
Description	
Location	Province: District:
Client	Name: Tell: Email (official):
Value	Award Value: Paid amount:
Start / End Dates	Start: End:
Completion	On Schedule ( ) yes ( ) no Certificate of Completion: ( ) yes ( )no
Comments	

Note: add up to 5 more if needed.

Financial Status

10. Revenues

Table (5)

Total Annual Company Revenues		
Year	US$	Afghanis
2018		
2017		
2016		

11. Applicants shall provide bank reference and / or letters of credit to demonstrate that they have access to lines of credit to the amount stated in Article B.4.

12. Financial Statement: these shall be the followings:

- Financial statements (balance sheets, included related notes, and income statements) for last three years.
- Bank reference and / or letters of credit.
- Statement regarding cash flow

Annex - 2

Bid FORM

ITB No.:

Project Name: Company Name:

To:

Dear Sir or Madam,

1. Having examined the Conditions of Contract, Scope of Work, Specifications, Bill of Quantities and all other documents received with the Invitation to Bid for the execution of the Works in connection with the above named Project, we, the undersigned offer to execute and complete such Works and remedy any faults and defects therein in conformity with the conditions spelled out in the afore-mentioned documents for the sum of as mentioned in Price Proposal.

   or such other sums as may be ascertained in accordance with the said conditions.

2. We undertake, if our Tender is accepted, to commence the Works within the time required in the contract conditions, and to complete the whole of the Works comprised in the contract within the time stated in the Contract Conditions.
3. We agree to abide by this Bid for the period of _____ days from the submission/opening date stated in the Invitation to Bid and it shall remain binding upon us and may be accepted at any time before the expiration of that period.
4. Unless and until a Contract Agreement is signed, this Bid, together with your written acceptance thereof, shall constitute a binding contract between us.
5. We understand that you are not bound to accept the lowest or any Bid you may receive.

Dated this : ..... day of .....

Signature : ..... in the capacity of .....

duly authorized to sign Bid for and on behalf of

.....

.....

(Bidder name and address in block capitals)

Annex-3

Declaration of Undertaking

Invitation to Bid No.:

Project Name:

We underscore the importance of a free, fair and competitive procurement process that precludes fraudulent use. In this respect we have neither offered nor granted, directly or indirectly, any inadmissible advantages to any public servants or other persons in connection with our bid, nor will we offer or grant any such incentives or conditions in the present procurement process or, in the event that we are awarded the contract, in the subsequent execution of the contract.

We also underscore the importance of adhering to minimum social standards ("Core Labour Standards") in the implementation of the project. We undertake to comply with the Core Labour Standards ratified by the country of Afghanistan.

We will inform our staff about their respective obligations and about their obligation to fulfill this declaration of undertaking and to obey the laws of the country of Afghanistan.

We also declare that our company/all members of the consortium has/have not been included in the list of sanctions of the United Nations, nor of the EU, nor in any other list of sanctions and affirm that our company/all members of the consortium will immediately inform the client if this situation should occur at a later stage.

We acknowledge that, in the event that our company (or a member of the consortium) is added to a list of sanctions that is legally binding upon the client, the client is entitled to exclude our company/the consortium from the procurement procedure and, if the contract is awarded to our company/the consortium, to terminate the contract immediately if the statements made in the Declaration of Undertaking were objectively false or the reason for exclusion occurs after the Declaration of Undertaking has been issued.

(Place) ... ., this ..... day of ……...

Name of company:_____

Signature:_____

Seal:_____

BILL OF QUANTITIES

Date: 05 /04/2019

Project Code: AFG/ORD/19/09

Annex -4

Project Title: Construction of Water Supply Network (Pipe Scheme)

Location: Khatoon qala village, Jawzjan Province, Afghanistan

Subject: Price Sheet (BoQ)

No.	Description	Unit	Quantity	Unit cost [AFN]	Amount [AFN]
1	**Water supply Network, Stand Taps, and Boundary Wall**				
1.01	**Excavation for pipe line:** Excavation for pipe line including taking out the waste materials from the site with it's all related activities according to the drawings.	M3	891.92		
1.02	**PCC:** PCC (1:2:4) with it's all related activities in accordance of the attached drawings. Concrete 28 days compressive strength: 200 kg/cm2 (1:2:4). W/C ratio: 0.5 (max).	M3	12.67		
1.03	**(RCC) Reinforced Cement Concrete** (1:1.5:3) with it's all related activities according to the drawing. Install concrete with suitable concrete placing equipment (pump, or similar), compact concrete with vibrators Crush should be used in concrete ,concrete mix by a mixer).	M3	15.83		
1.04	Stone masonry: Stone masonry for foundation, ramp, stair and supper structure with 1:5 mortar of cement and sand with it's all related activities according to the drawing and technical specification.	M3	50.59	-	
1.05	Brick work with Mortar (250,1:5)	M3	36.75		
1.06	Pointing for out side face with 1:3 cement and sand mortar with it's all related activities according to the drawing.	M2	92.8		
1.07	Back filling: In the back filling the excavation materials should be used.	M3	835		
1.08	Door according to the drawing.	PCS	1.00		
1.09	Signe Board for project (1.2x0.8)m	M2	0.96		
1.10	**Piping and fitting works:** Pipe HDPE d=50mm (که قابلیت برداشت 10بار فشار را داشته باشد)	M	1570		
1.11	Pipe HDPE d=40 mm(که قابلیت برداشت 10 بار فشار را داشته باشد)	M	58		
1.12	Pipe HDPE d=32 mm (که قابلیت برداشت 10 بار فشار را داشته باشد یعنی در مقابل 100 متر ارتفاع مقاومت داشته باشد)	M	52		
1.13	Pipe GI , d=20mm with for 3stand taps top	M	3		
1.14	Gate valve 50mm	PCS	1		
1.15	Gate Valve GI 32mm for Stand Tap	PCS	3		
1.16	Gate Valve Box for ever Stand	PCS	3		
1.17	HDPE Tee50.x32x50	PCS	1		

No.	Description	Unit	Quantity	Unit cost [AFN]	Amount [AFN]
1.18	HDPE Tee40.x32x40	PCS	1		
1.19	Change 50mm ,40mm	PCS	1		
1.20	Change 40mm ,32mm	PCS	1		
1.21	Joint d=50 mm (for 1570m pipe)	PCS	16		
1.22	Joint d=40 mm (for 58m pipe)	PCS	1		
1.23	Joint d=32 mm (for 52m pipe)	PCS	1		
1.24	HDPE Tee two(20x20) (ELBOW) for stand taps	PCS	3		
1.25	HDPE Socket fitting (20x32) for each stand tap	PCS	3		
1.26	Ball valves (20x20)mm for3 stand tap	PCS	3		
	Sub Total (1) Water supply Network, Stand Taps, and Boundary Wall				
2	**Water Tank**				
2.01	Excavation of foundation in ground type 3	M3	23.05		
2.02	Stone masonry with cement sand mortar M 1:4	M3	3.9		
2.03	PCC M150kg/cm2 (1:2:4)	M3	2.85		
2.04	RCC M 200kg/cm2 including steel bar and shuttering according to the drawings	M3	15.04		
2.05	Supply and installation of plate Iron (50x50)cm with hooks 12mm thickness	No.	4		
2.06	Supply and installation of complete set 20m3 (20000 lit) Elevated steel water according to attached map including transportation.	Set	1		
2.07	Supply and installation of galvanized GI pipe inside dia 2" with flange	M	32		
2.08	Supply and installation of galvanized Iron socket dia 2"	No.	6		
2.09	Supply and installation of galvanized galvanized iron Nipple, dia 2"	No.	10		
2.10	Supply and installation of galvanized Iron Elbow, dia 2"	No.	5		
2.11	Supply and installation of galvanized Iron Union 2"	No.	2		
2.12	Supply and installation of end cap for the wash out pipe 2"	No.	1		
	Sub Total (2) Water Tank				
3	**Supply and Installation of Solar System**				
3.01	Water pump, SP9-16. Product No: 98809281	Each	1		
3.02	GF 270w 99299012 Solar Panels Made in EU	Each	22		
3.03	Solar panel stand steel 25 and 45 degree Large	Each	1		
3.04	Inverter IPP66, Product No: 99044349 RSI 3x380v IP66 3kw 8.01	Each	1		
3.05	Metal box for inverter	Each	1		
3.06	Submersible power cable (4*3mm)	M	100		
3.07	Conduit pipe for wiring	M	50		
3.08	Cable (2*4mm2) for switch	M	50		
3.09	Ground rod with copper cable	Each	1		
3.1	Float switch start/ stop water storage tank	Each	1		

No.	Description	Unit	Quantity	Unit cost [AFN]	Amount [AFN]
3.11	Supply and installation of solar pump set and solar panels	Each	1		
3.12	Safety rope for holding of solar water pump borehole	Each	180		
3.13	Pipe PE 1 1/4 Inch 16 bar	Each	80		
3.14	Transportation charges	Each	1		
	Sub Total (3) Supply and Installation of Solar System				
4	**Water Well**				
4.01	Well drilling with rotary drilling rig with diameter of (13'') in all soil stratums and sampling from every geological formations.	M	80		
4.02	Supply and installation of PVC casing pipe with diameter of 8'' Class D.	M	50		
4.03	Supply and Installation of PVC filter pipe with diameter 8'' Class D.	M	30		
4.04	Gravel back filling around filter (gravel packing) from rounded, cleaned and river gravel, and the size of gravel will be considered according to the geological formations grain size.	M^3	6		
4.05	Clay (mud) or cement blocking around the casing for prevention the well from contaminations sources and entering surface water to the well.	M^3	1.04		
4.06	Compressor test for well cleaning and developing till the water be completely clear from fine material.	Job	1		
4.07	Pumping test with submersible pump for specifying water discharging rate of well and water sampling for quality analysis.	Hour	8		
4.08	Providing technical report of well by company to RuWatSIP (Rural Water, Sanitation and Irrigation Program).	Job	1		
	Sub Total (4) Water Well				
	GRAND TOTAL IN WORDS (AFN)				

BILL OF QUANTITIES

Date: 05/04/2019

Project Code: AFG/ORD/19/09 Annex -4

Project Title: Construction of Water Supply Network (Pipe Scheme)

Location: Cheelangum village, Sar-e- Pul Province, Afghanistan

Subject: Price Sheet (BoQ)

No.	Description	Unit	Quantity	Unit cost [AFN]	Amount [AFN]
1	**Water supply Network and Stand Taps**				
1.01	**Excavation for pipe line:** Excavation for pipe line including taking out the waste materials from the site with it's all related activities according to the drawings.	M3	704.18		
1.02	**PCC:** PCC (1:2:4) with it's all related activities in accordance of the attached drawings. Concrete 28 days compressive strength: 200 kg/cm2 (1:2:4). W/C ratio: 0.5 (max).	M3	0.58		
1.03	**(RCC) Reinforced Cement Concrete** (1:1.5:3) with it's all related activities according to the drawing. Install concrete with suitable concrete placing equipment (pump, or similar), compact concrete with vibrators Crush should be used in concrete ,concrete mix by a mixer).	M3	2.37		
1.04	**Stone masonry:** Stone masonry for foundation, ramp, stair and supper structure with 1:5 mortar of cement and sand with it's all related activities according to the drawing and technical specification.	M3	4.34	-	
1.05	**Pointing** for out side face with 1:3 cement and sand mortar with it's all related activities according to the drawing.	M2	15.48		
1.06	**Steel Bars:** Rusty steel bar is not allowed to be used, the tensile stress of the steel will not be less then 2400 kg/cm2	Kg	118.87		
1.07	**shuttering:** shuttering should be checked by field engineer that it is well tied, flat and no hole or space between two adjacent planks	M2	6.48		
1.08	**Back filling:** In the back filling the excavation materials should be used.	M3	700		
1.09	Signe Board for project (1.2x0.8)m	M2	0.96		
1.10	**Piping and fitting works:** Pipe HDPE d= 75 mm (که قابلیت برداشت 16 بار فشار را داشته باشد یعنی در مقابل 160 متر ارتفاع مقاومت داشته باشد)	M	65		
1.11	Pipe HDPE d=50mm (که قابلیت برداشت 16 بار فشار را داشته باشد)	M	315		
1.12	Pipe HDPE d=25 mm(که قابلیت برداشت 16 بار فشار را داشته باشد)	M	670		
1.13	Pipe HDPE d=32 mm(که قابلیت برداشت 16 بار فشار را داشته باشد)	M	350		
1.14	Pipe GI , d=20mm with for 9 stand taps top	M	2.5		
1.15	Pipe GI , d=70mm (for reservoir)	M	1.5		
1.16	Pipe GI , d=50mm (for spring Box valves)	M	1.5		
1.17	Gate valve 75mm	PCS	1		

No.	Description	Unit	Quantity	Unit cost [AFN]	Amount [AFN]
1.18	Gate Valve GI 25mm for Stand Tap	PCS	9		
1.19	Gate Valve Box for every Stand Tap	PCS	9		
1.20	HDPE Tee 50.x50x25	PCS	4		
1.21	HDPE Tee 50x25x25	PCS	4		
1.22	HDPE Four Tee 25x25x32	PCS	2		
1.23	HDPE Tee 32x50x32	PCS	2		
1.24	Joint d=50 mm (for 315m pipe)	PCS	3		
1.25	Joint d=25 mm (for 670m pipe)	PCS	4		
1.26	Joint d=75 mm (for 65m pipe)	PCS	1		
1.27	Joint d=32 mm (for 350m pipe)	PCS	2		
1.28	HDPE Tee two(20x20) (ELBOW) for stand taps	PCS	18		
1.29	HDPE Socket fitting (20x20)	PCS	9		
1.30	Ball valves (20x20)mm for 9 stand tap	PCS	9		
	Sub Total (1) Water supply Network, and Stand Taps				
2	**Water Tank**				
2.01	Excavation of foundation in ground type	M3	26.89		
2.02	Stone masonry with cement sand mortar M 1:4	M3	3.9		
2.03	PCC M150kg/cm2 (1:2:4)	M3	2.85		
2.04	RCC M 200kg/cm2 including steel bar and shuttering according to the drav	M3	15.04		
2.05	Supply and installation of plate Iron (50x50)cm with hooks 12mm thicknes	No.	4		
2.06	Supply and installation of complete set 20m3 (20000 lit) Elevated steel water according to attached map including transportation.	Set	1		
2.07	Supply and installation of galvanized GI pipe inside dia 2" with flange	M	32		
2.08	Supply and installation of galvanized Iron socket dia 2"	No.	6		
2.09	Supply and installation of galvanized galvanized iron Nipple, dia 2"	No.	10		
2.10	Supply and installation of galvanized Iron Elbow, dia 2"	No.	5		
2.11	Supply and installation of galvanized Iron Union 2"	No.	2		
2.12	Supply and installation of end cap for the wash out pipe 2"	No.	1		
	Sub Total (2) Water Tank				
3	**Supply and Installation of Solar System**				
3.01	Water pump, SP9-16. Product No: 98809281	Each	1		
3.02	GF 270w 99299012 Solar Panels Made in EU	Each	22		
3.03	Solar panel stand steel 25 and 45 degree Large	Each	1		
3.04	Inverter IPP66, Product No: 99044349 RSI 3x380v IP66 3kw 8.01	Each	1		
3.05	Metal box for inverter	Each	1		
3.06	Submersible power cable (4*3mm)	M	100		
3.07	Conduit pipe for wiring	M	50		

No.	Description	Unit	Quantity	Unit cost [AFN]	Amount [AFN]
3.08	Cable (2*4mm2) for switch	M	50		
3.09	Ground rod with copper cable	Each	1		
3.1	Float switch start/ stop water storage tank	Each	1		
3.11	Supply and installation of solar pump set and solar panels	Each	1		
3.12	Safety rope for holding of solar water pump borehole	Each	180		
3.13	Pipe PE 1 1/4 Inch 16 bar	Each	80		
3.14	Transportation charges	Each	1		
	Sub Total (3) Supply and Installation of Solar System				
4	**Water Well**				
4.01	Well drilling with rotary drilling rig with diameter of (13'') in all soil stratums and sampling from every geological formations.	M	80		
4.02	Supply and installation of PVC casing pipe with diameter of 8'' Class D.	M	50		
4.03	Supply and Installation of PVC filter pipe with diameter 8'' Class D.	M	30		
4.04	Gravel back filling around filter (gravel packing) from rounded, cleaned and river gravel, and the size of gravel will be considered according to the geological formations grain size.	M^3	6		
4.05	Clay (mud) or cement blocking around the casing for prevention the well from contaminations sources and entering surface water to the well.	M^3	1.04		
4.06	Compressor test for well cleaning and developing till the water be completely clear from fine material.	Job	1		
4.07	Pumping test with submersible pump for specifying water discharging rate of well and water sampling for quality analysis.	Hour	8		
4.08	Providing technical report of well by company to RuWatSIP (Rural Water, Sanitation and Irrigation Program).	Job	1		
	Sub Total (4) Water Well				
	GRAND TOTAL IN WORDS (AFN)				

Working Drawings

For

Construction of Pipe Scheme

Khatoon Qala Village, Jawzjan Province, Afghanistan

Date: April, 2019		Organization for Relief Development

SCHEDULE OF DRAWINGS

SHEET NO	DWG CODE	SHEET REFERENCE NO	DESCRIPTION	SHEET NO	DWG CODE	SHEET REFERENCE NO	DESCRIPTION
			SITE PLAN				
1		C-01	**SITE PLAN**				
2		C-02	**GPS Points**				
3		C-03	**Well Plan**				
4		C-04	**Well Section**				
5		C-05	**Stand Tap Plan**				
6		C-06	**Stand Tap Section**				
7		C-07	**Boundary Wall Plan**				
8		C-08	**Boundary Wall Section**				
9		C-09	**Pressure**				
10		C-10	**Elevation**				
11		C-11	**Length**				
12		C-12	**Diameter**				
13		C-13	**Velocity**				

ORGANIZATION FOR RELIEF DEVELOPMENT
(ORD)

No.	Revision/ Issue	Date

PROJECT NAME:
Construction of Pipe Scheme

LOCATION:
Khatoon Qala Village,
Jawzjan Province - Afghanistan

INDEX SHEET

Ar. Designed by:	
St. Designed by:	
Drawn by:	
Checked by:	
Approved by:	

Drawing Title:	Index of Drawings	Sheet No.: XX/00
Drawing No.:	xxx	
Scale:	xxx	

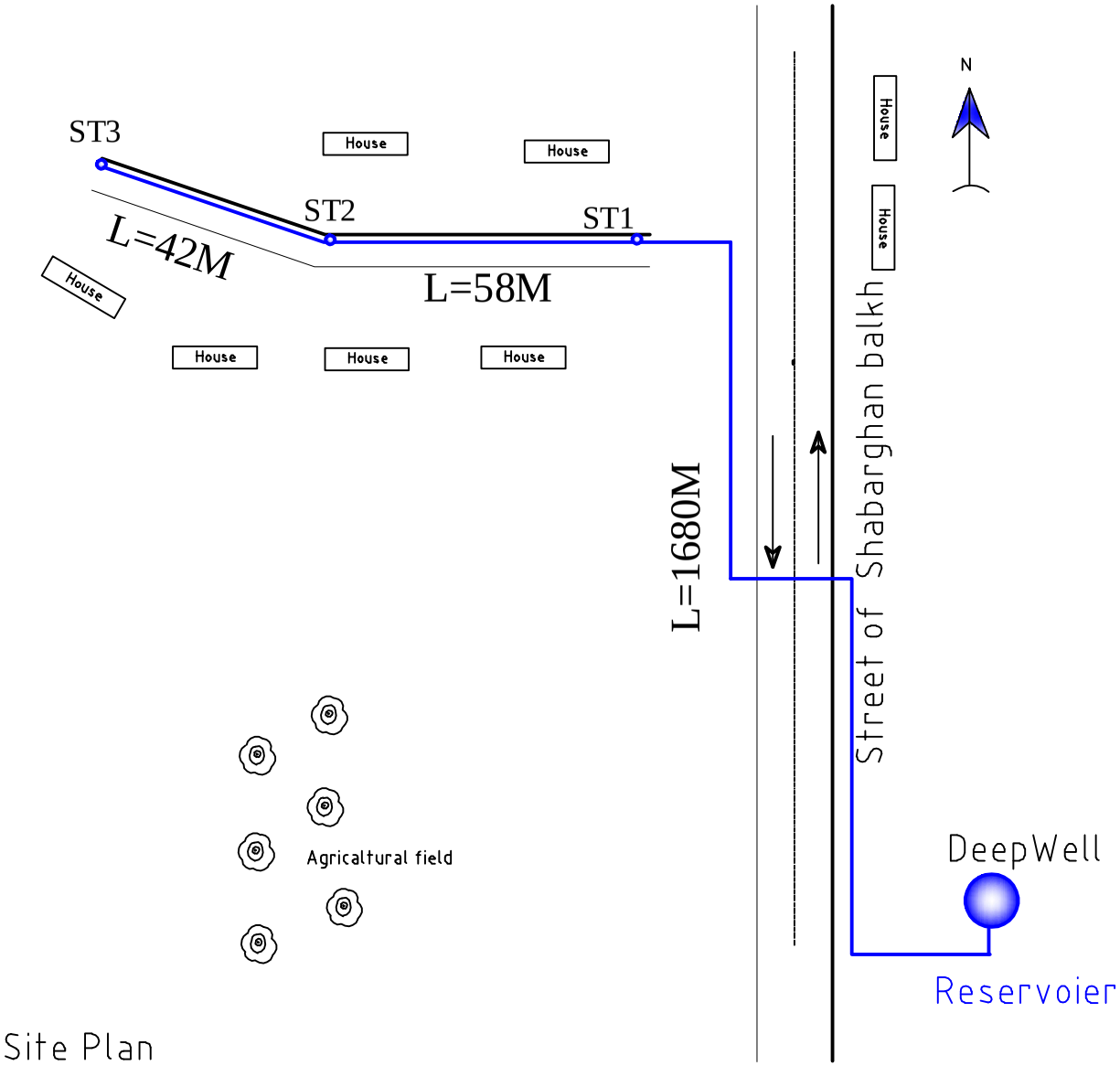

Site Plan
Scale: 1:50

ORGANIZATION FOR RELIEF DEVELOPMENT
(ORD)

No.	Revision/ Issue	Date

PROJECT NAME:
Construction of Pipe Scheme
LOCATION:
Khatoon Qala Village,
Jawzjan Province - Afghanistan

Site Plan

Ar. Designed by:	
St. Designed by:	
Drawn by:	Eng. Mujeb
Checked by:	Eng. Yar Muhamud
Approved by:	

Drawing Title:	Site Plan	Sheet No.: 01/13
Drawing No.:	C-01	
Scale:	1: 10	

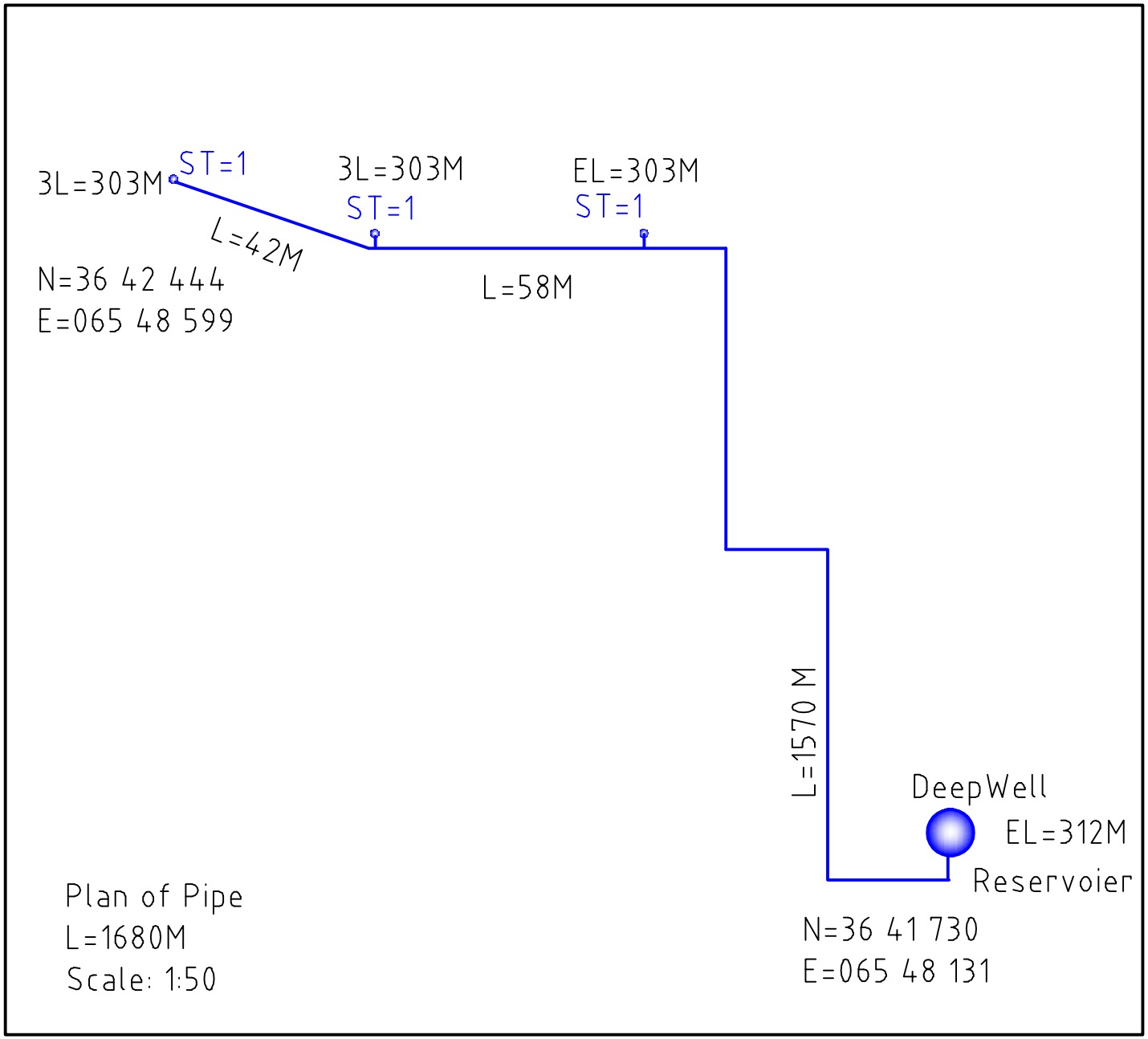

ORGANIZATION FOR RELIEF DEVELOPMENT
(ORD)

No.	Revision/ Issue	Date

PROJECT NAME:
Construction of Pipe Scheme

LOCATION:
Khatoon Qala Village,
Jawzjan Province - Afghanistan

GPS Points

Ar. Designed by:	
St. Designed by:	
Drawn by:	Eng. Mujeb
Checked by:	Eng. Yar Muhamad
Approved by:	

Drawing Title:	GPS Points	Sheet No.: 02/13
Drawing No.:	C-02	
Scale:	1:50	

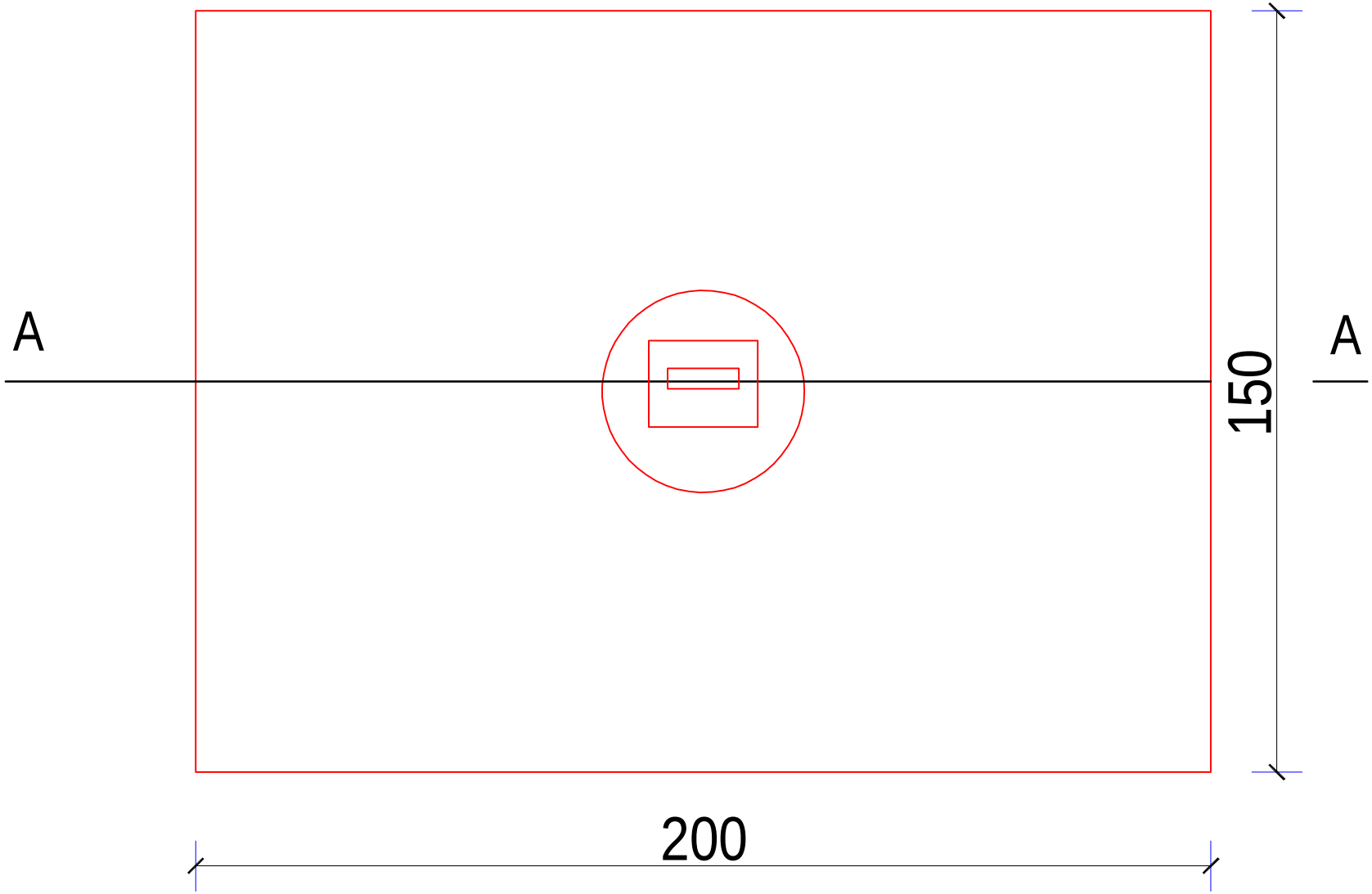

Plan

Scale: 1:2

ORGANIZATION FOR RELIEF DEVELOPMENT
(ORD)

No.	Revision/ Issue	Date

PROJECT NAME:
Construction of Pipe Scheme

LOCATION:
Khatoon Qala Village,
Jawzjan Province - Afghanistan

Well Plan

Ar. Designed by:	
St. Designed by:	
Drawn by:	Eng. Jawed Asaee
Checked by:	Eng. Yar Muhamud
Approved by:	

Drawing Title:	Well Plan	Sheet No.: 03/13
Drawing No.:	C-03	
Scale:	1:2	

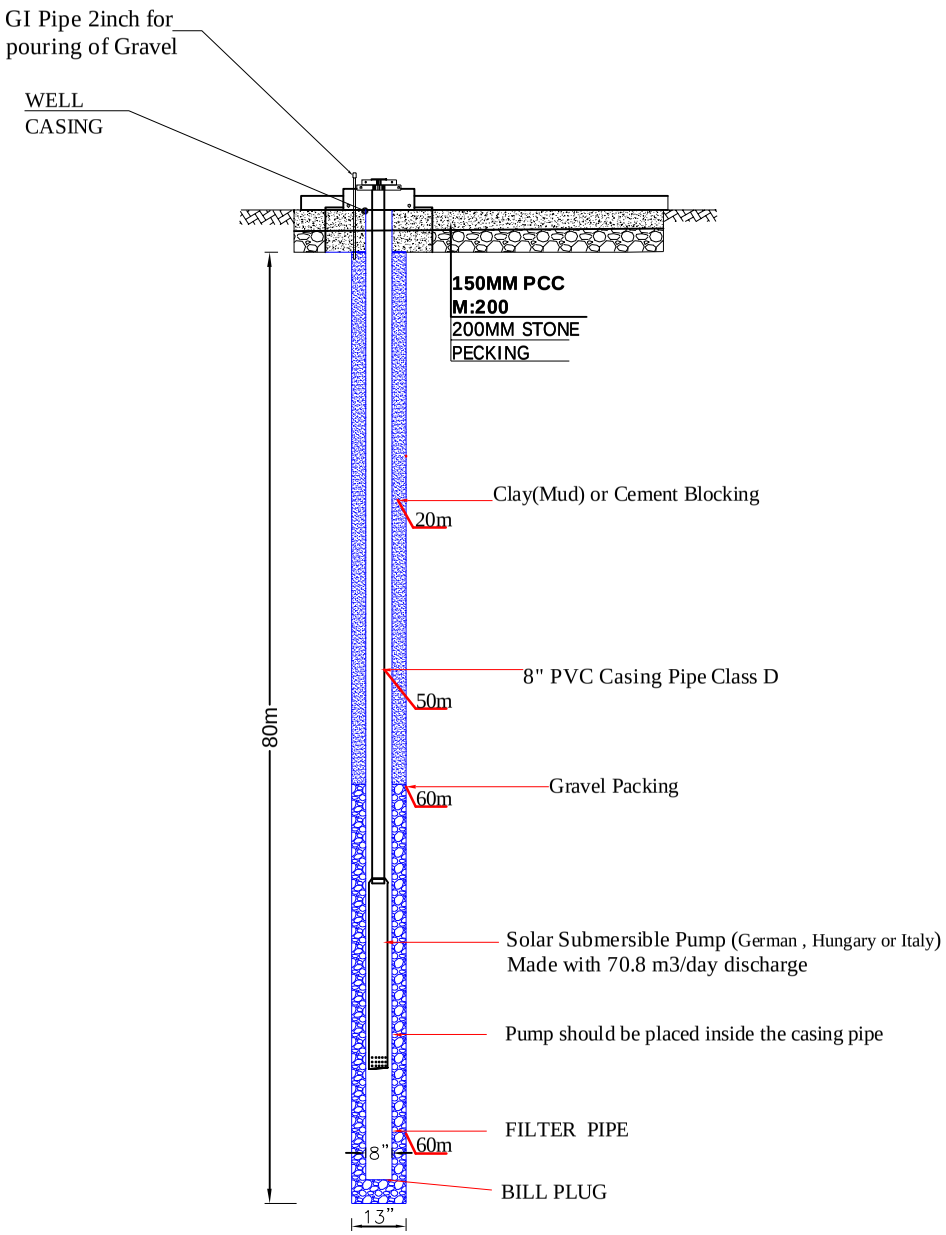

Section A-A
Scale: 1:75

Notes

2-The working pressure for pipes and valves will be 16 or 20 bar (290 PSI)

3- If the ground stratum are made of bed rocks it no need for installation of casing pipes. if the stratum are made of Loss soil it should be stablized by installation casing pipes.

4-Each drilled strata depth should be noted and soil sample should be kept in a sample box separately .

5-Pump test for 8 hours.

6-the depth of filter pipe has considered based on the previous experience . the true depth will be determined after well practical drilling.

ORGANIZATION FOR RELIEF DEVELOPMENT
(ORD)

No.	Revision/ Issue	Date

PROJECT NAME:
Construction of Pipe Scheme

LOCATION:
Khatoon Qala Village,
Jawzjan Province - Afghanistan

Section A-A

Ar. Designed by:	
St. Designed by:	
Drawn by:	Eng. Jawed Ataee
Checked by:	Eng. Yar Muhamad
Approved by:	

Drawing Title:	Section	Sheet No.: 04/13
Drawing No.:	C-04	
Scale:	1:75	

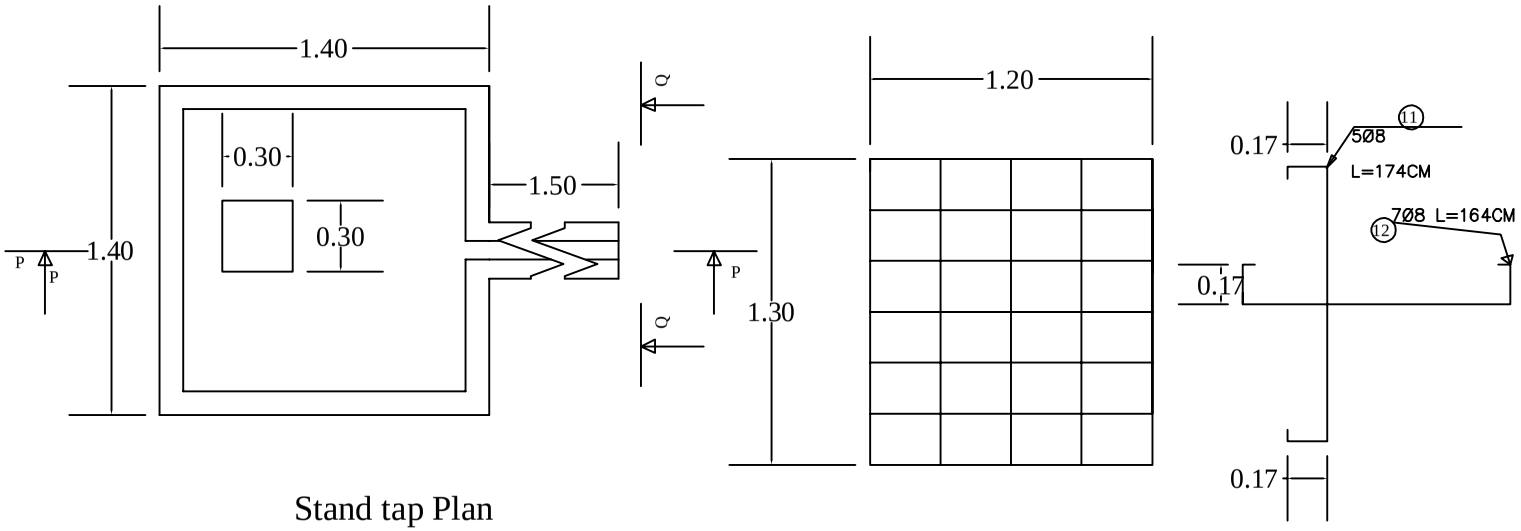

Stand tap Plan
Scale: 1:30

Note:
1. Drawings are not in scale as shown.
2. All dimensions are in meter(M)
3. The elevation of each points as shown in drawings,
4. diameters and pressure in each pipe are calculated By EPANET 2 programme's.

ORGANIZATION FOR RELIEF DEVELOPMENT
(ORD)

No.	Revision/ Issue	Date

PROJECT NAME:
Construction of Pipe Scheme
LOCATION:
Khatoon Qala Village,
Jawzjan Province - Afghanistan

Stand Tap Plan

Ar. Designed by:	
St. Designed by:	
Drawn by:	Eng. Jawed Asaee
Checked by:	Eng. Yar Muhamud
Approved by:	

Drawing Title:	Plan	Sheet No.: 05/13
Drawing No.:	C-05	
Scale:	1:30	

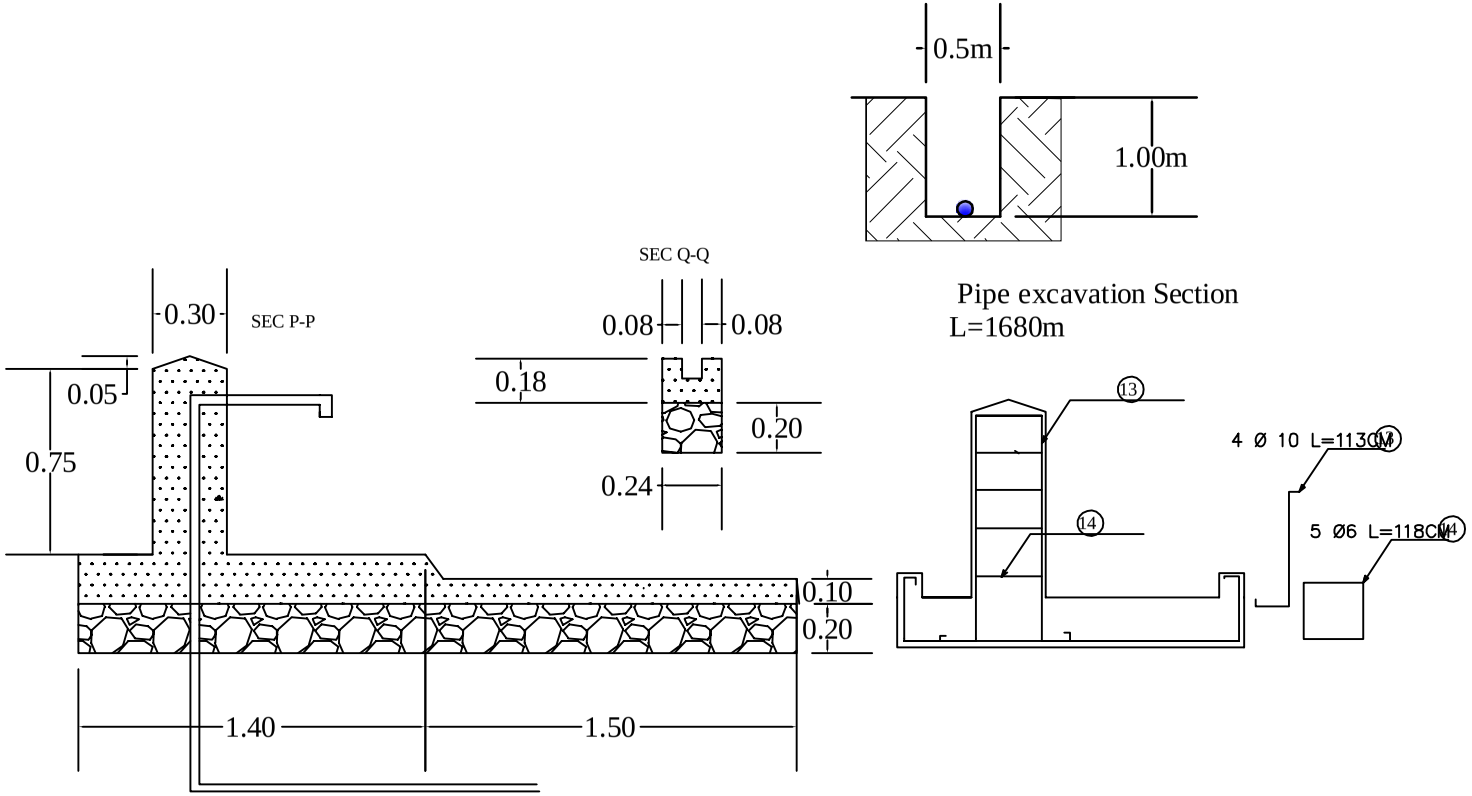

Pipe excavation Section
L=1680m

Stand tap Section
Scale: 1:30

ORGANIZATION FOR RELIEF DEVELOPMENT
(ORD)

No.	Revision/ Issue	Date

PROJECT NAME:
Construction of Pipe Scheme

LOCATION:
Khatoon Qala Village,
Jawzjan Province - Afghanistan

SECTION

Ar. Designed by:	
St. Designed by:	
Drawn by:	Eng. Jawed Azaee
Checked by:	Eng. Yar Muhamud
Approved by:	

Drawing Title:	Section	Sheet No.: 06/13
Drawing No.:	C-06	
Scale:	1:30	

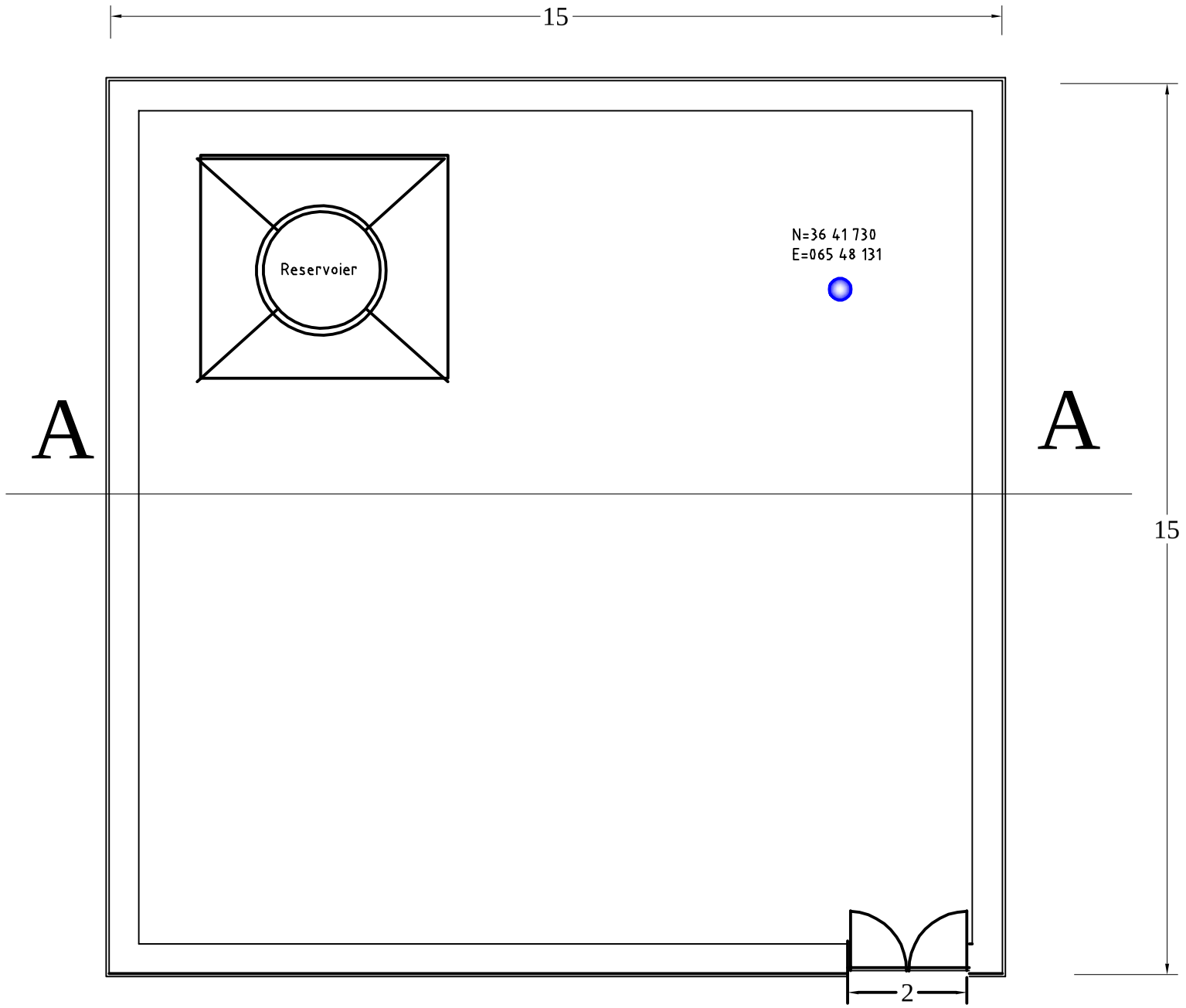

plan

Scale: 1:50

ORGANIZATION FOR RELIEF DEVELOPMENT
(ORD)

No.	Revision/ Issue	Date

PROJECT NAME:
Construction of Boundary Wall
LOCATION:
Khatoon Qala Village,
Jawzjan Province - Afghanistan

Boundary Wall Plan

Ar. Designed by:	
St. Designed by:	
Drawn by:	Eng. Mujeb
Checked by:	Eng. Yar Muhamud
Approved by:	

Drawing Title:	Plan	Sheet No.: 07/13
Drawing No.:	C-07	
Scale:	1:50	

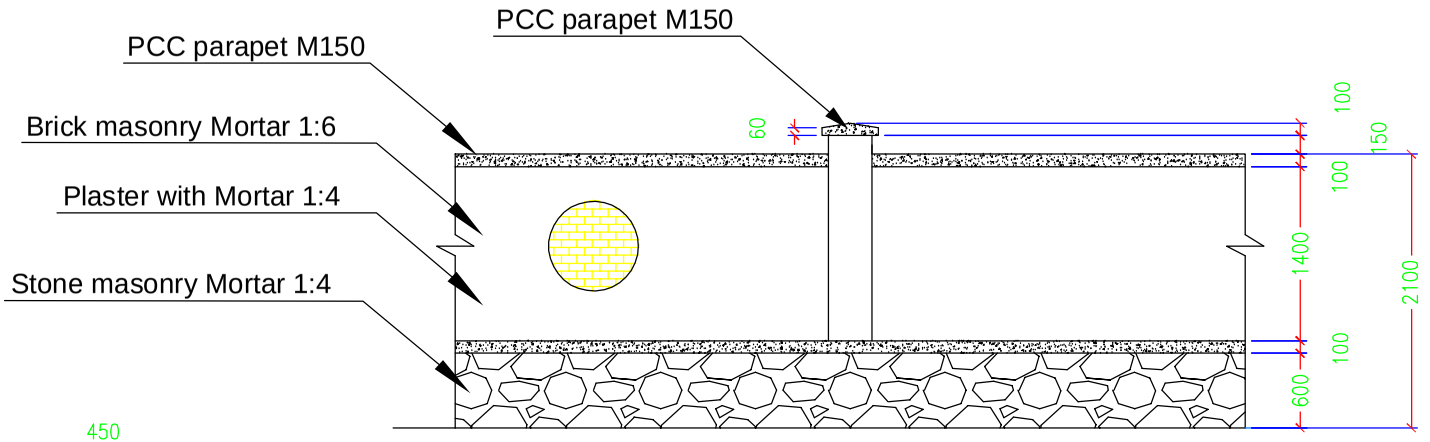

FRONT ELEVATION

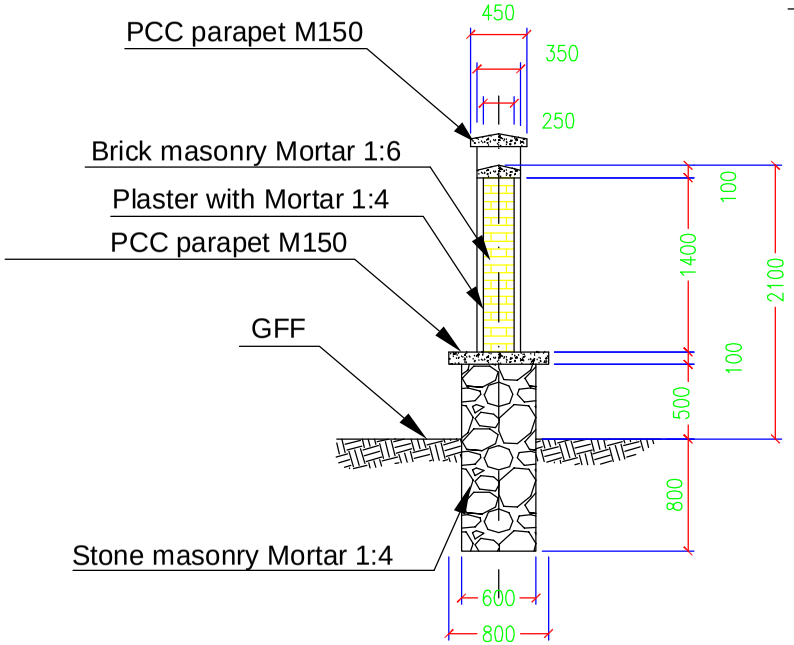

SECTION B-B

Scale: 1:75

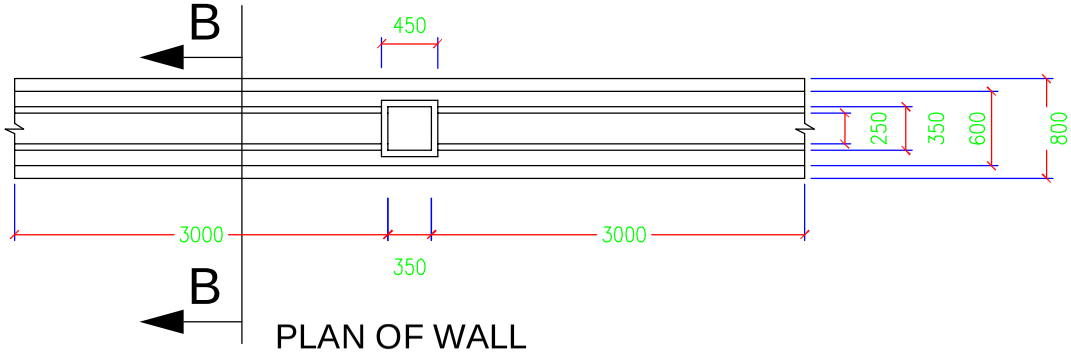

PLAN OF WALL

ORGANIZATION FOR RELIEF DEVELOPMENT
(ORD)

No.	Revision/ Issue	Date

PROJECT NAME:
Construction of Boundary Wall
LOCATION:
Khatoon Qala Village,
Jawzjan Province - Afghanistan

SECTION B-B

Ar. Designed by:	
St. Designed by:	
Drawn by:	Eng. Jawed Azaee
Checked by:	Eng. Yar Muhamad
Approved by:	

Drawing Title:	Section	Sheet No.: 08/13
Drawing No.:	C-08	
Scale:	1:75	

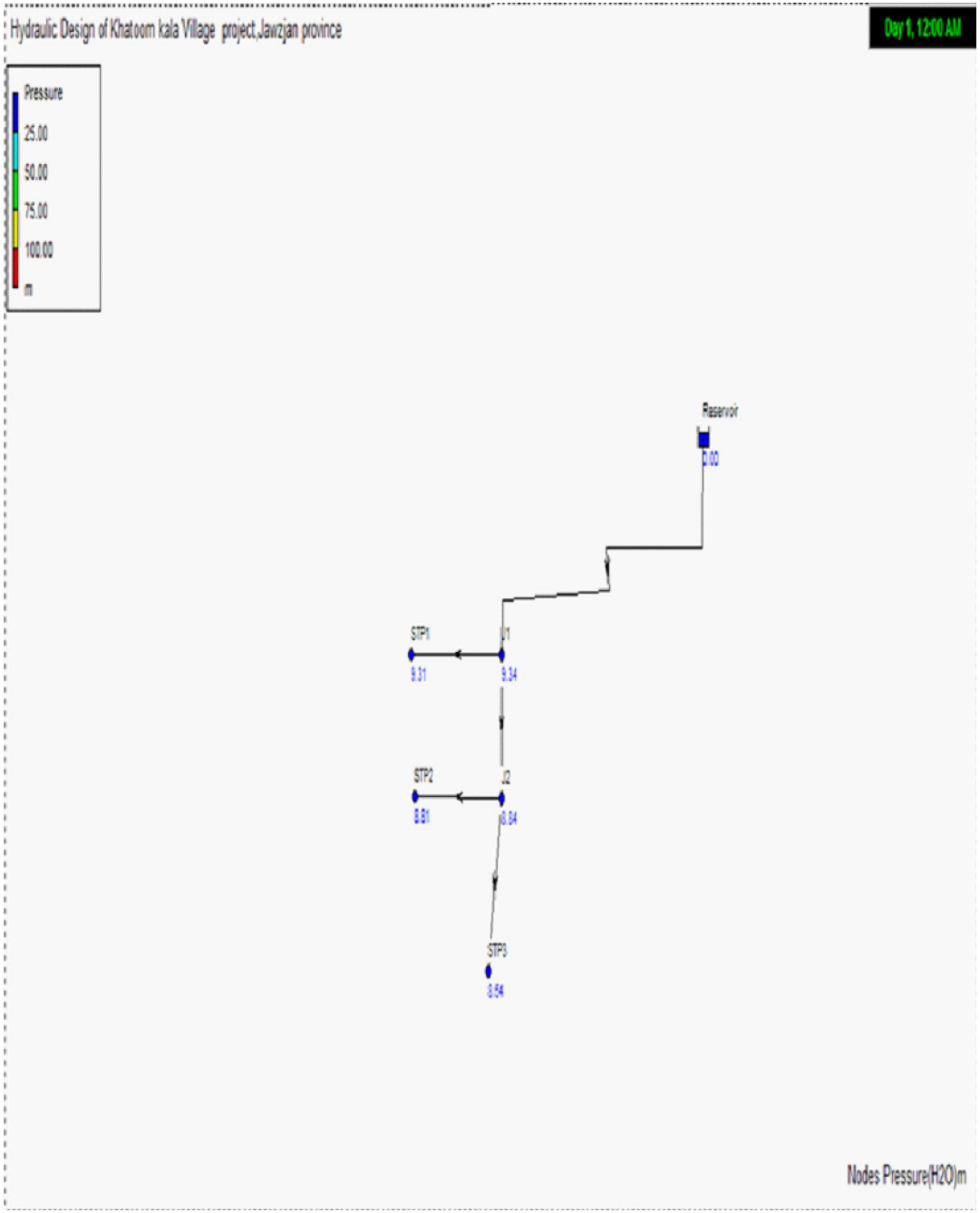

ORGANIZATION FOR RELIEF DEVELOPMENT
(ORD)

No.	Revision/ Issue	Date

PROJECT NAME:
Construction of Pipe Scheme

LOCATION:
Khatoon Qala Village,
Jawzjan Province - Afghanistan

Pressure

Ar. Designed by:	
St. Designed by:	
Drawn by:	Eng. Hasiburahman
Checked by:	Eng. Yar Muhamad
Approved by:	

Drawing Title:	Pressure	Sheet No.: 09/13
Drawing No.:	C-09	
Scale:		

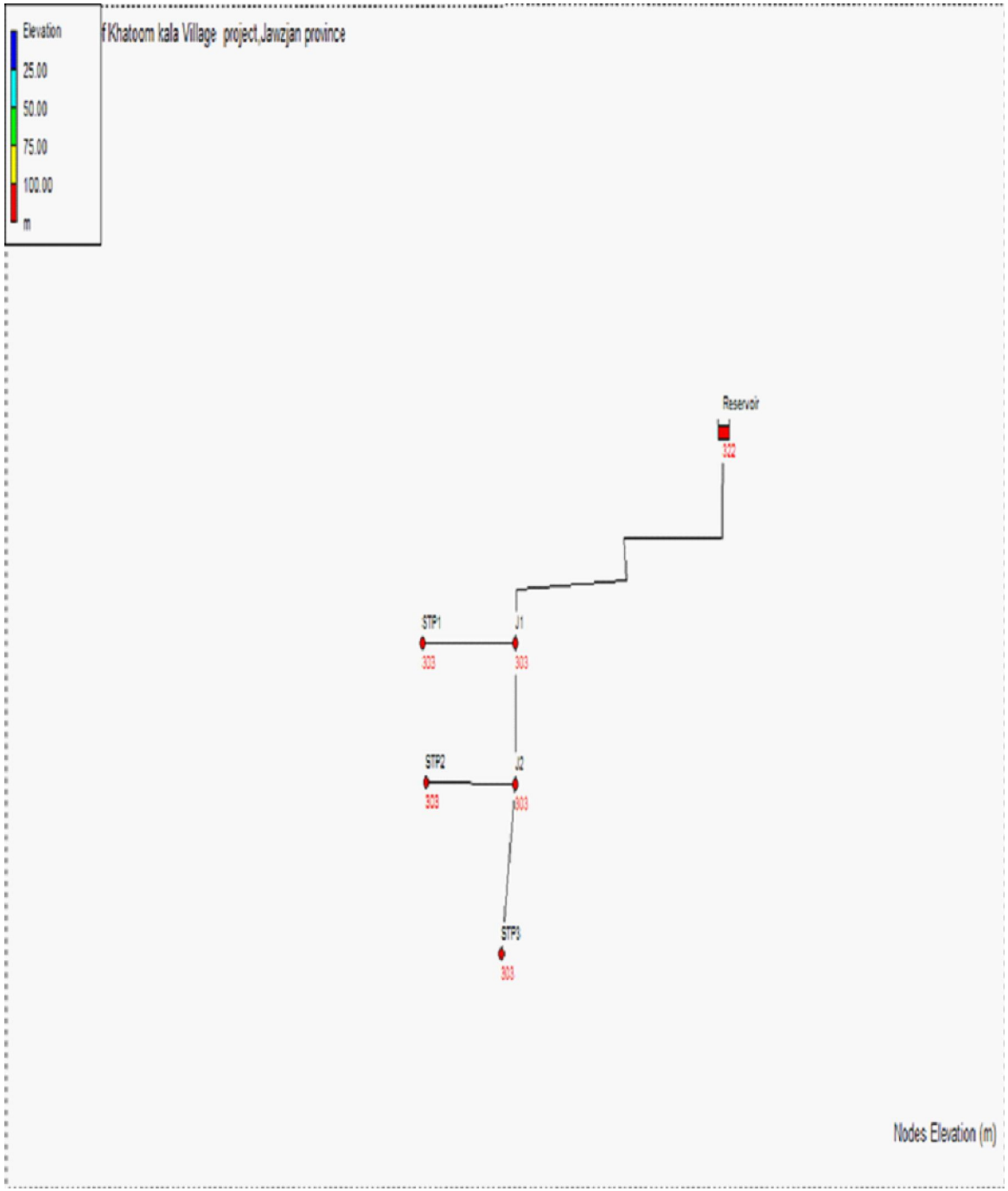

ORGANIZATION FOR RELIEF DEVELOPMENT
(ORD)

No.	Revision/ Issue	Date

PROJECT NAME:
Construction of Pipe Scheme

LOCATION:
Khatoon Qala Village,
Jawzjan Province - Afghanistan

Elevation Points

Ar. Designed by:	
St. Designed by:	
Drawn by:	Eng. Hasiburahman
Checked by:	Eng. Yar Muhamud
Approved by:	

Drawing Title:	Section	Sheet No.: 10/13
Drawing No.:	C-10	
Scale:		

Hydraulic Design of Khatoom kala Village project,Jawzjan province

Day 1, 12:00 AM

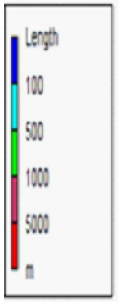

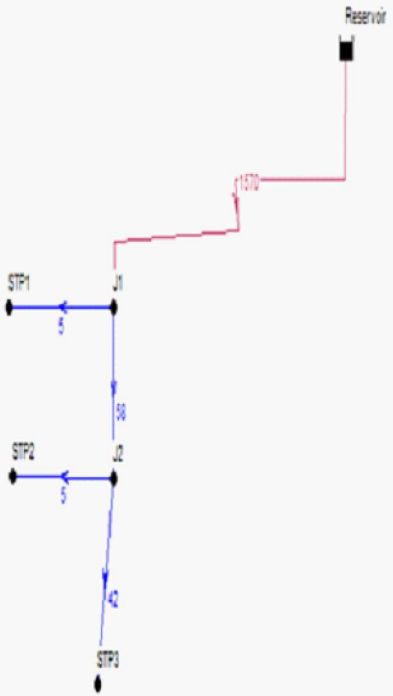

Pipe Lenght (m)

ORGANIZATION FOR RELIEF DEVELOPMENT
(ORD)

No.	Revision/ Issue	Date

PROJECT NAME:
Construction of Pipe Scheme

LOCATION:
Khatoon Qala Village,
Jawzjan Province - Afghanistan

Length Measure

Ar. Designed by:	
St. Designed by:	
Drawn by:	Eng. Hasiburahman
Checked by:	Eng. Yar Muhamad
Approved by:	

Drawing Title:	notes	Sheet No.:
Drawing No.:	C-11	11/13
Scale:		

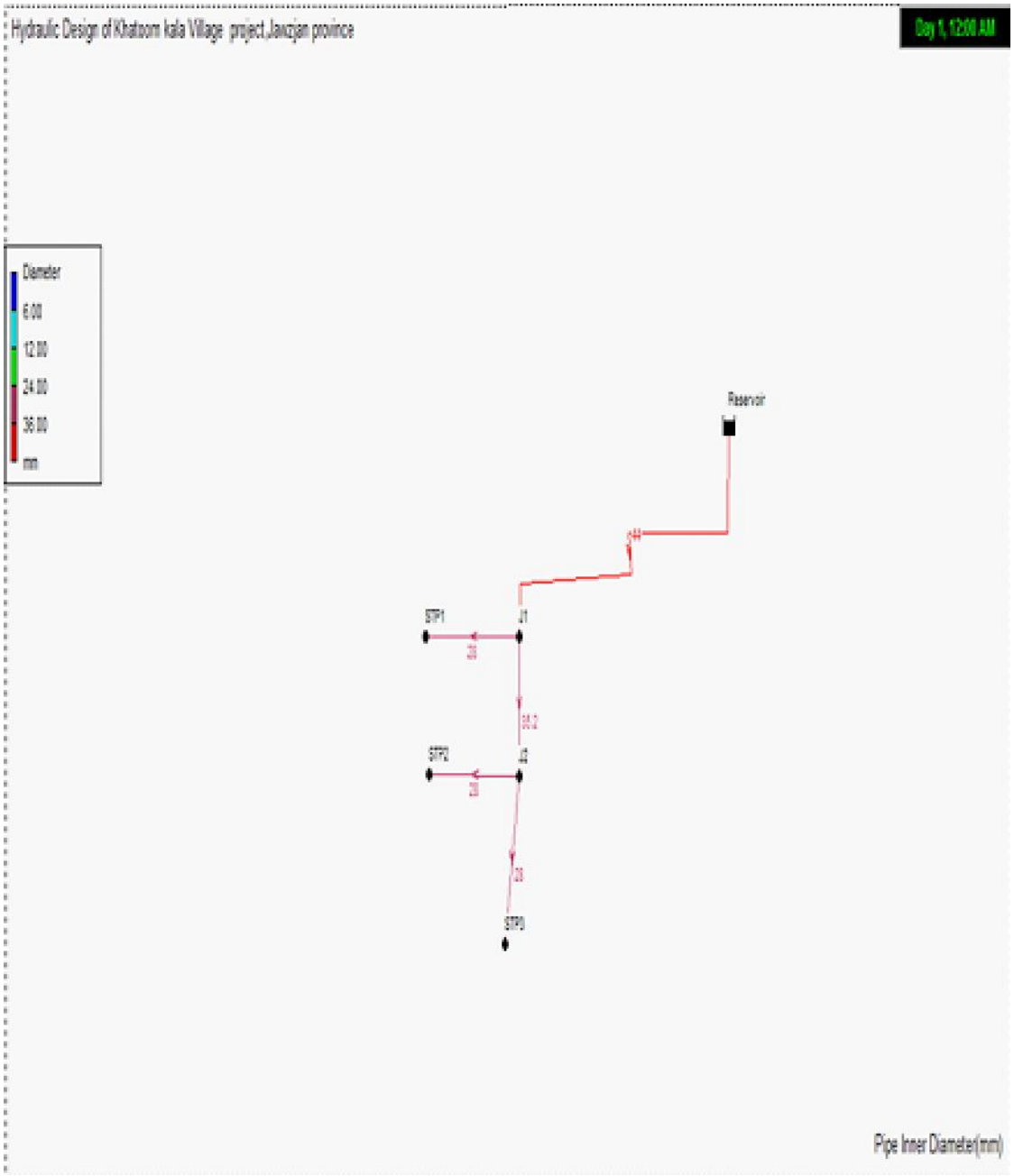

ORGANIZATION FOR RELIEF DEVELOPMENT
(ORD)

No.	Revision/ Issue	Date

PROJECT NAME:
Construction of Pipe Scheme

LOCATION:
Khatoon Qala Village,
Jawzjan Province - Afghanistan

Diameter

Ar. Designed by:	
St. Designed by:	
Drawn by:	Eng. Hasiburahman
Checked by:	Eng. Yar Muhamud
Approved by:	

Drawing Title:	Section	Sheet No.: 12/13
Drawing No.:	C-12	
Scale:		

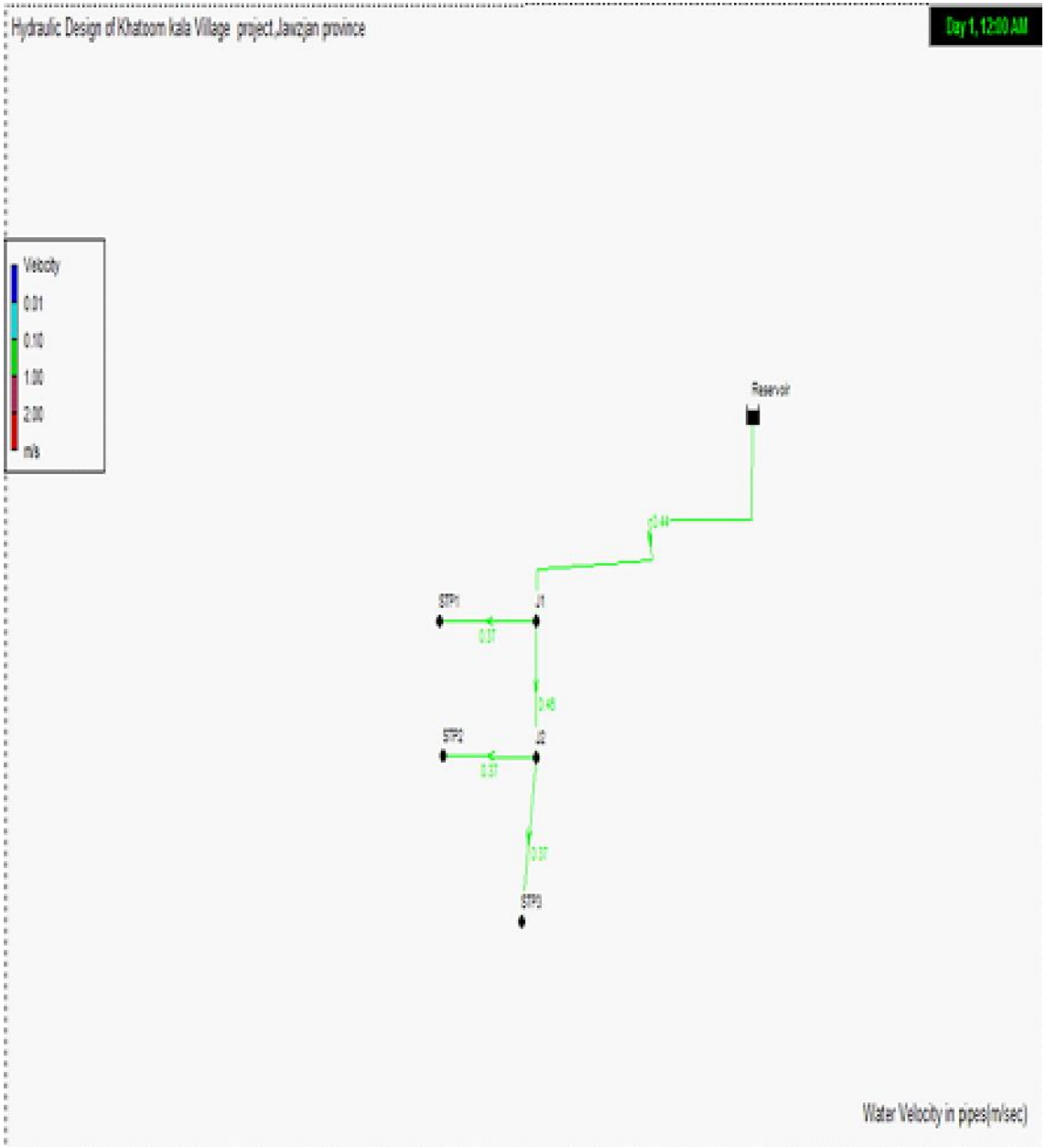

ORGANIZATION FOR RELIEF DEVELOPMENT
(ORD)

No.	Revision/ Issue	Date

PROJECT NAME:
Construction of Pipe Scheme

LOCATION:
Khatoon Qala Village,
Jawzjan Province - Afghanistan

Velocity

Ar. Designed by:	
St. Designed by:	
Drawn by:	Eng. Hasiburahman
Checked by:	Eng. Yar Muhamad
Approved by:	

Drawing Title:	notes	Sheet No.: 13/13
Drawing No.:	C-13	
Scale:		

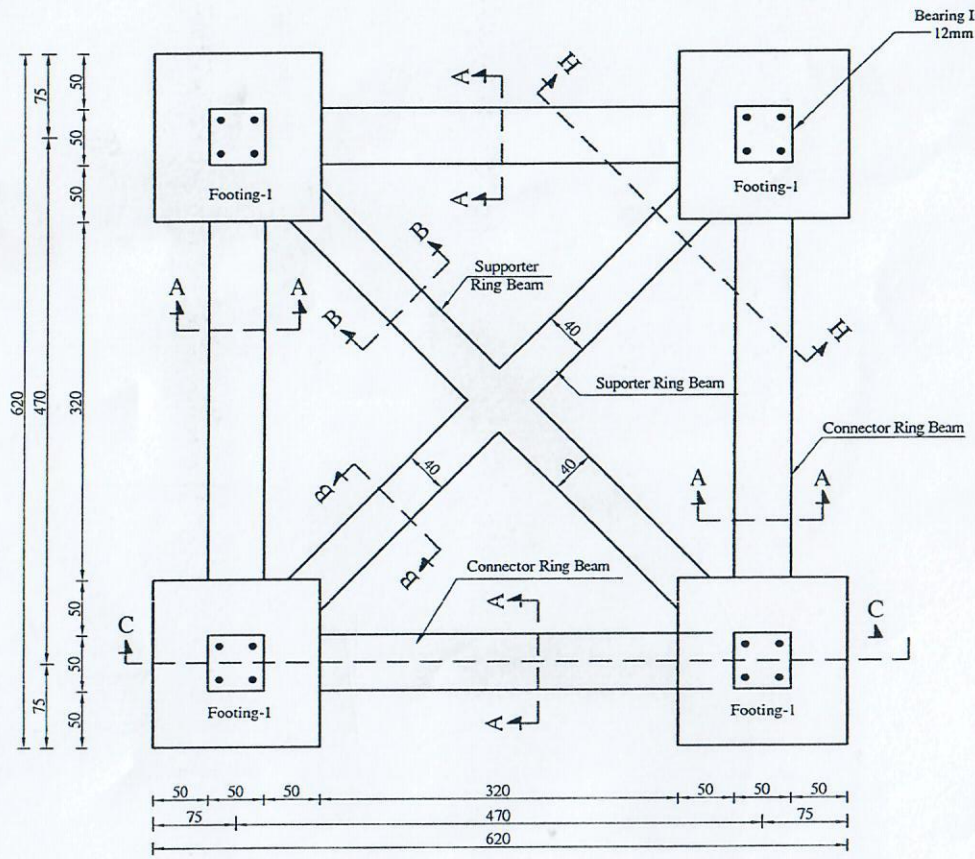

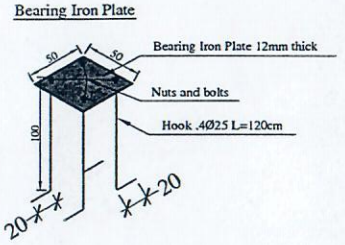

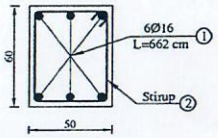

Section A-A

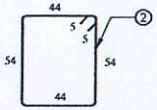

4x37Ø8@15 c/c L=206cm

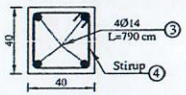

Section B-B

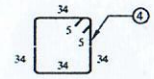

2x43Ø8@15 c/c L=146cm

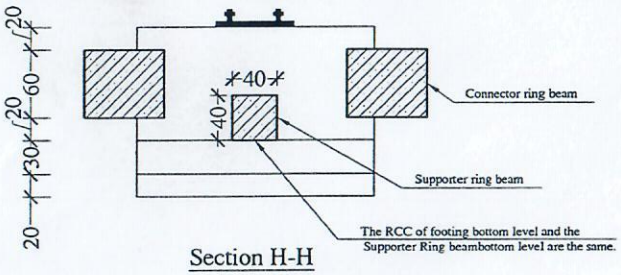

Section H-H

FOUNDATION PLAN FOR ELEVATED WATER TANK

TIS AFGHANISTAN Ministry of Rural Rehabilitation and Development WatSIP	SURVEYED BY	Balkh RRD Engineer	CHECKED BY	Eng. Mahmood	SCALE		SHEET NO.	1/5	PROVINCE	Balkh
	DESIGNED BY	Egn. Najibullah	REVIEWED BY	Eng. Fazel Omer "Zahid"	DATE	01.05.2017			DISTRICT	Charbulak
	DRAWN BY	Egn. Najibullah	APPROVED BY	Eng. Ghulam Qader	DRAWING NO.				VILLAGE	Qawrachi Watani

PROJECT NAME: *Water Supply Project*

DRAWING TITLE: 20 m3 Elevated Steel Water Tank

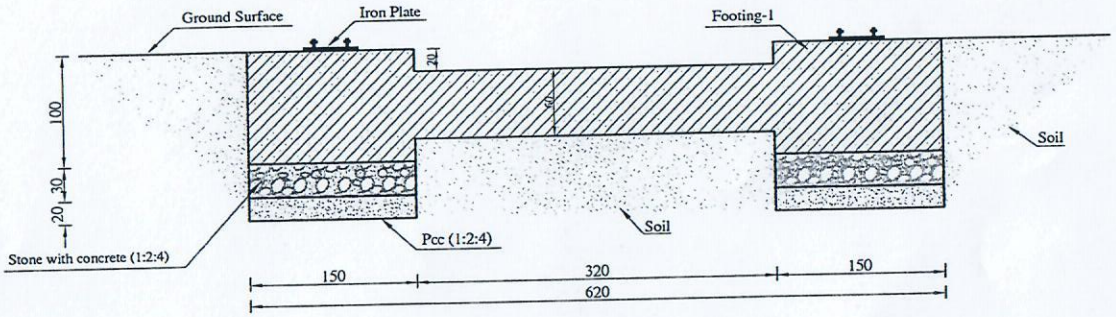

Section C-C

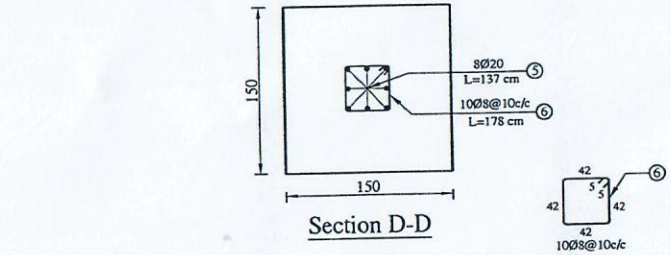

Section D-D

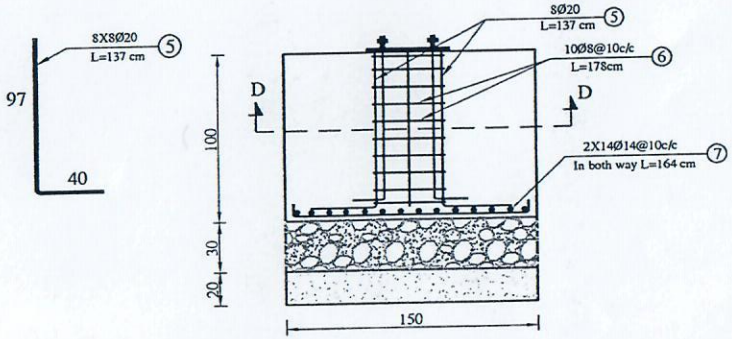

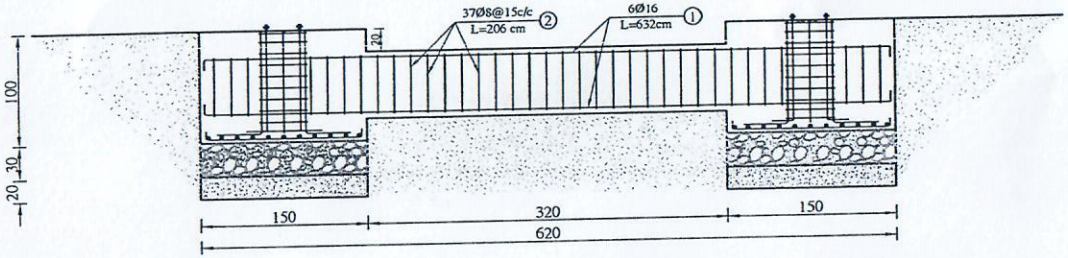

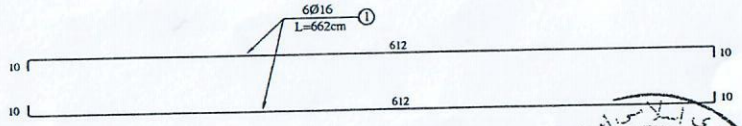

Section C-C
Rienforcement

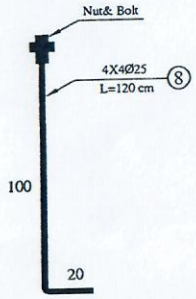

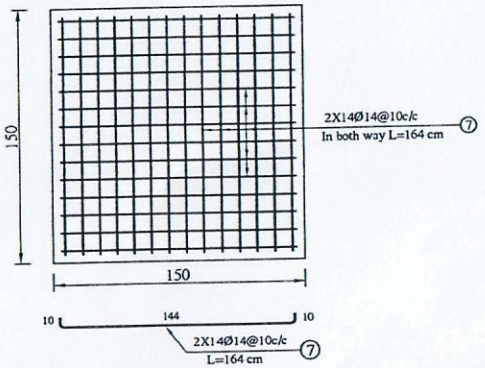

Footing-1

TIS AFGHANISTAN Ministry of Rural Rehabilitation and Development WatSIP	SURVEYED BY	Balkh RRD Engineer	CHECKED BY	Eng. Mahmood	SCALE		SHEET NO. 2/5	PROVINCE	Balkh	PROJECT NAME: Water Supply Project
	DESIGNED BY	Egn. Najibullah	REVIEWED BY	Eng. Fazel Omer "Zahid"	DATE	01.05.2017		DISTRICT	Char bulak	DRAWING TITLE: 20 m3 Elevated Steel Water Tank
	DRAWN BY	Egn. Najibullah	APPROVED BY	Eng. Ghulam Qader	DRAWING NO.			VILLAGE	Qawrachi Watani	

Section G-G

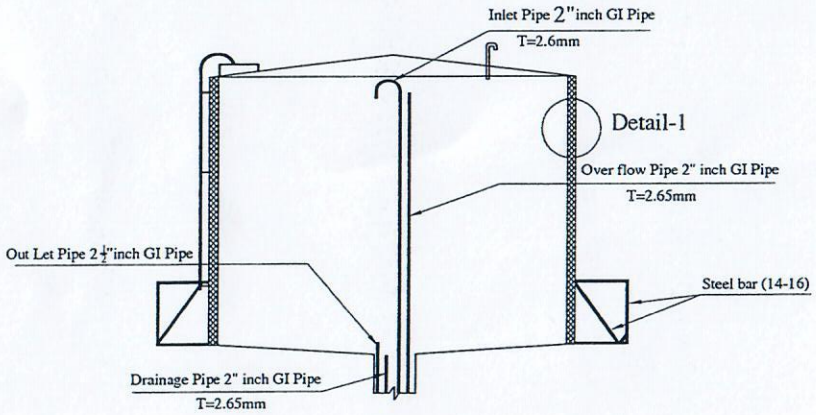

Detail-1

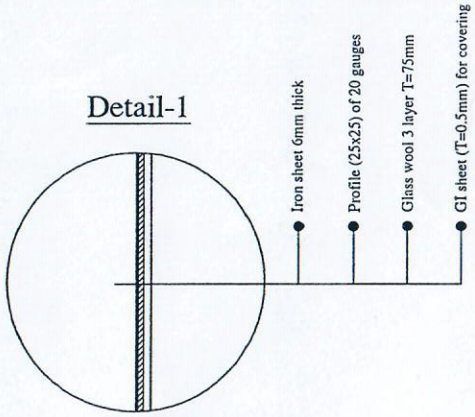

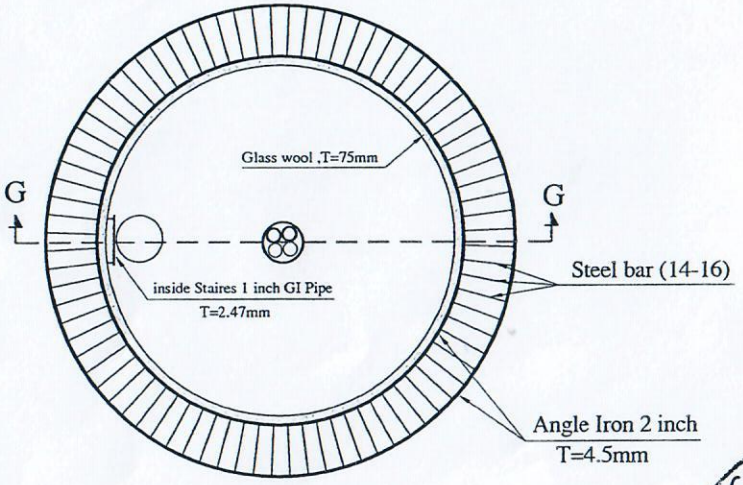

Section F-F

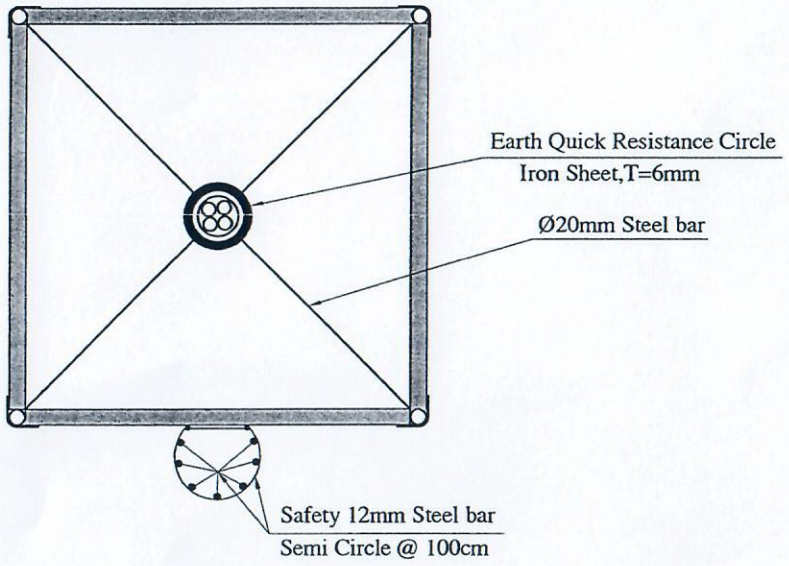

Section E-E

TIS AFGHANISTAN Ministry of Rural Rehabilitation and Development WatSIP	SURVEYED BY	Balkh RRD Engineer	CHECKED BY	Eng. Mahmood	SCALE		SHEET NO.	5/5	PROVINCE	Balkh	PROJECT NAME: Water Supply Project
	DESIGNED BY	Egn. Najibullah	REVIEWED BY	Eng. Fazel Omer "Zahid"	DATE	01.05.2017			DISTRICT	Char bulak	DRAWING TITLE: 20 m3 Elevated Steel Water Tank
	DRAWN BY	Egn. Najibullah	APPROVED BY	Eng. Ghulam Qader	DRAWING NO.				VILLAGE	Qawrachi Watani	

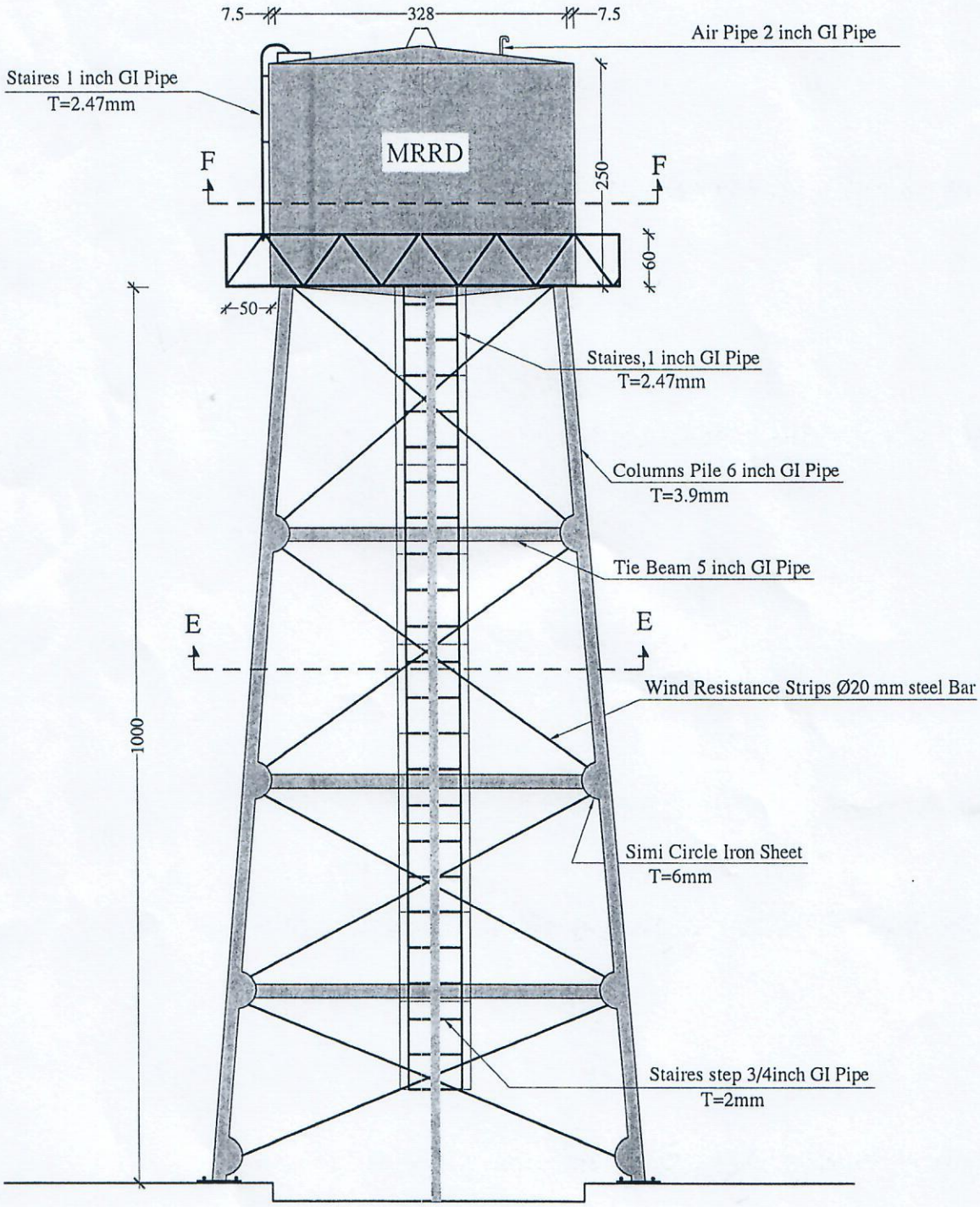

TIS AFGHANISTAN Ministry of Rural Rehabilitation and Development WatSIP	SURVEYED BY	Balkh RRD Engineer	CHECKED BY	Eng. Mahmood	SCALE		SHEET NO. 3/5	PROVINCE	Balkh	PROJECT NAME Water Supply Project
	DESIGNED BY	Egn. Najibullah	REVIEWED BY	Eng. Fazel Omer "Zahid"	DATE	01.05.2017		DISTRICT	Char bulak	DRAWING TITLE 20 m3 Elevated Steel Water Tank
	DRAWN BY	Egn. Najibullah	APPROVED BY	Eng. Ghulam Qader	DRAWING NO.			VILLAGE	Qawrachi Watani	

Working Drawings

For

Construction of Pipe Scheme

Cheelangum Village, Sare Pul Province, Afghanistan

Date: March, 2019		Organization for Relief Development

SCHEDULE OF DRAWINGS

SHEET NO	DWG CODE	SHEET REFERENCE NO	DESCRIPTION	SHEET NO	DWG CODE	SHEET REFERENCE NO	
			SITE PLAN				
1		C-01	GENERAL SITE PLAN				
2		C-02	GPS Points				
3		C-03	GPS Elevation Points				
4		C-04	Well Apron Plan				
5		C-05	SECTION A–A				

ORGANIZATION FOR RELIEF DEVELOPMENT
(ORD)

No.	Revision/ Issue	Date

PROJECT NAME:
Construction of Pipe Scheme

LOCATION:
Cherlangum Village,
Sari-i-Pul Province - Afghanistan

INDEX SHEET

Ar. Designed by:	
St. Designed by:	
Drawn by:	
Checked by:	
Approved by:	

Drawing Title:	Index of Drawings	Sheet No.:
Drawing No.:	xxx	XX/00
Scale:	xxx	

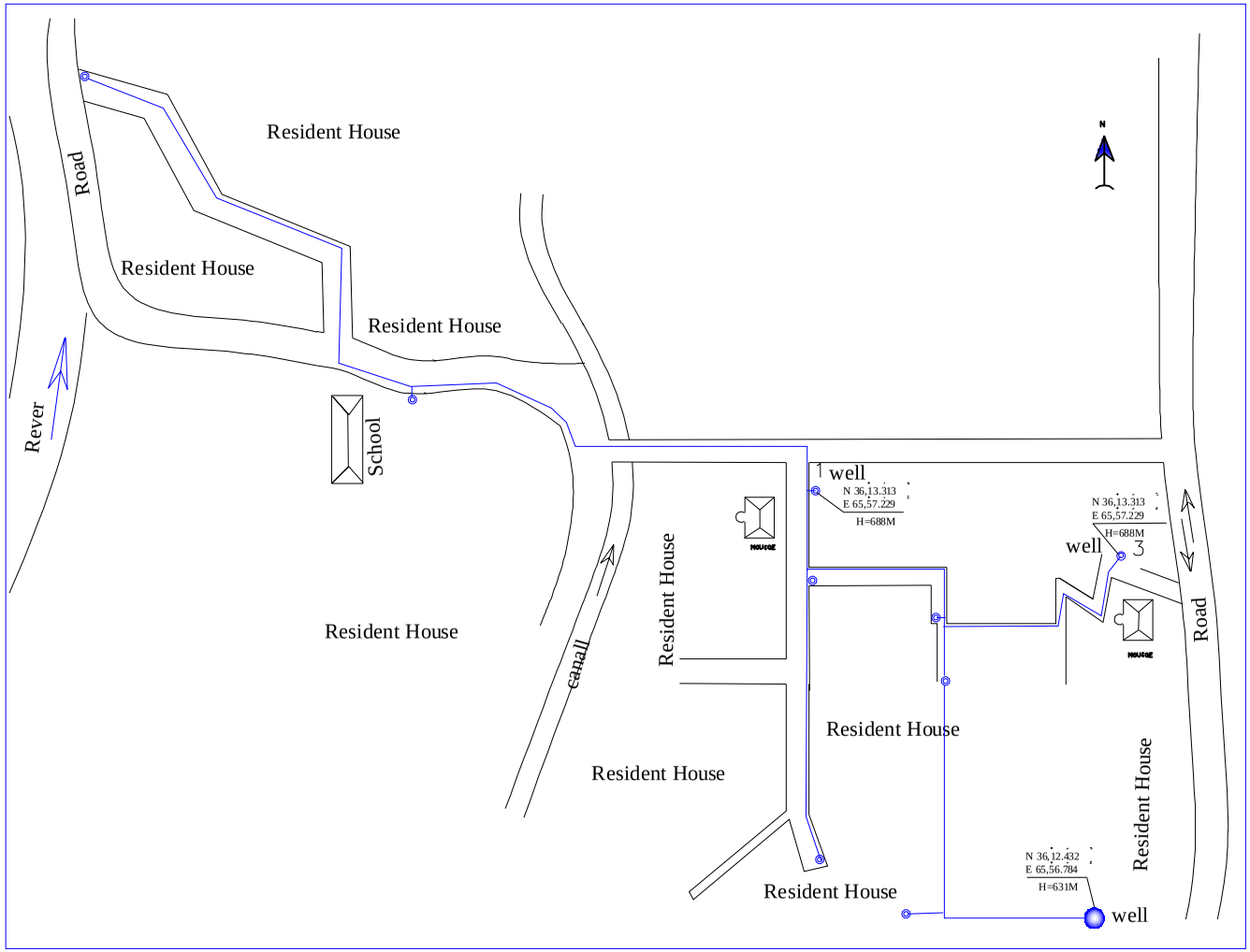

ORGANIZATION FOR RELIEF DEVELOPMENT
(ORD)

No.	Revision/ Issue	Date

PROJECT NAME:
Construction of Pipe Scheme

LOCATION:
Cheelangom Village,
Sare Pul Province, Afghanistan

Site Plan

Ar. Designed by:	
St. Designed by:	
Drawn by:	Eng. Mujeb Rashidi
Checked by:	Eng. Yar Muhamud
Approved by:	

Drawing Title:	Site Plan	Sheet No.: 01/05
Drawing No.:	C-01	
Scale:	1:100	

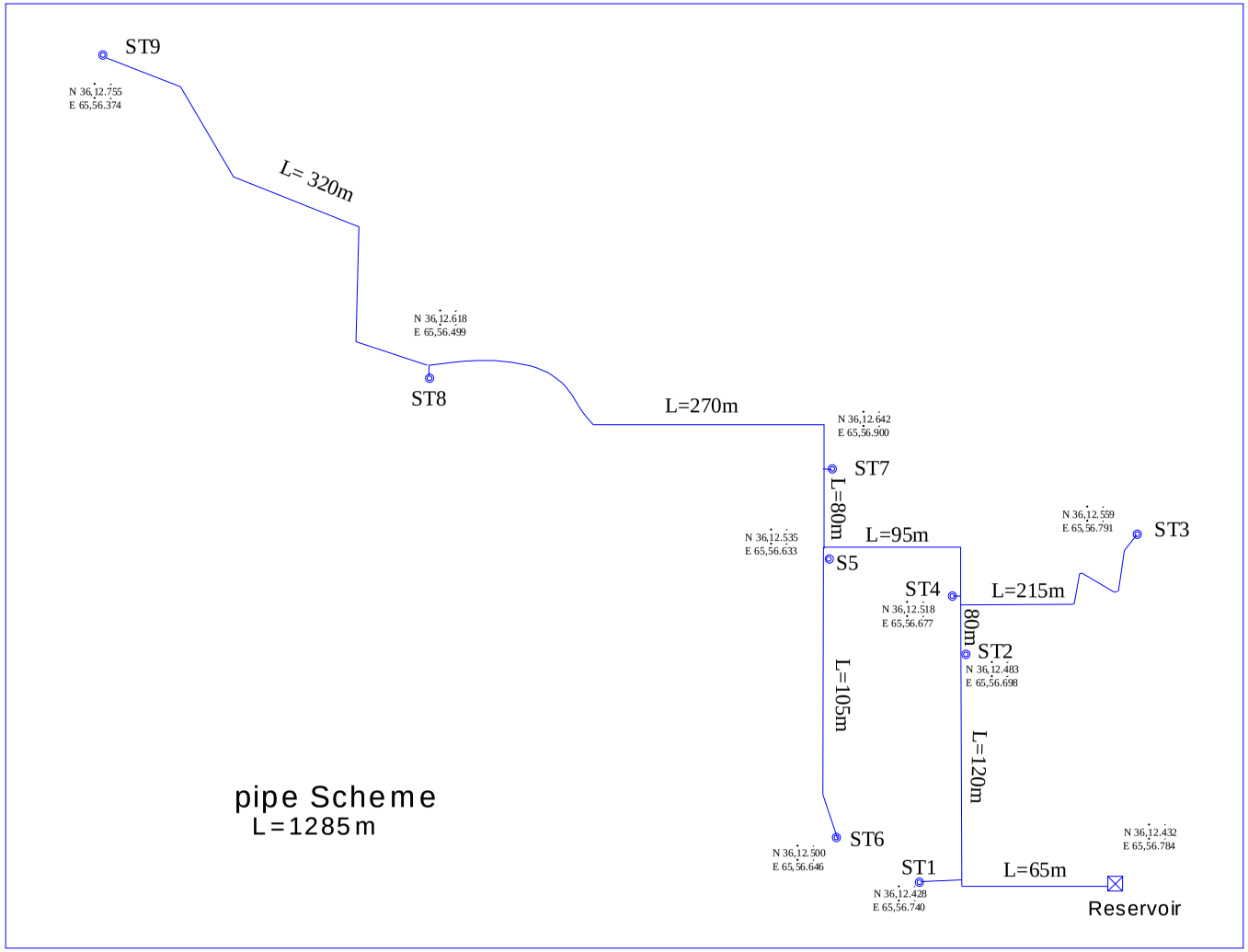

ORGANIZATION FOR RELIEF DEVELOPMENT
(ORD)

No.	Revision/ Issue	Date

PROJECT NAME:
Construction of Pipe Scheme

LOCATION:
Cheelangom Village,
Sare Pul Province, Afghanistan

GPS Points

Ar. Designed by:	
St. Designed by:	
Drawn by:	
Checked by:	Eng. Yar Muhamud
Approved by:	

Drawing Title:	Site Plan	Sheet No.: 02/05
Drawing No.:	C-03	
Scale:	1:100	

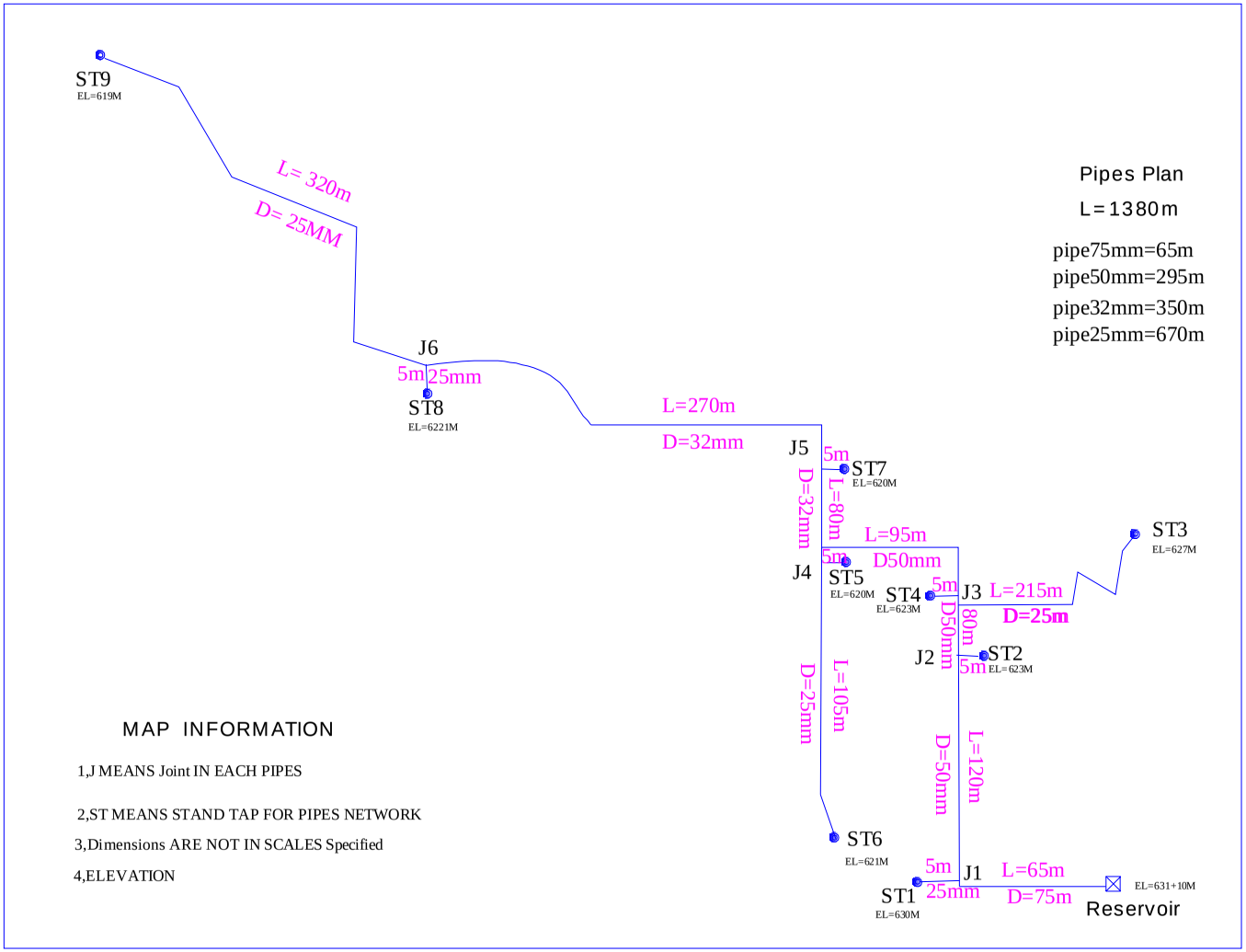

No.	Revision/ Issue	Date

PROJECT NAME:
Construction of Pipe Scheme
LOCATION:
Cheelangum Village,
Sare Pul Province, Afghanistan

GPS Elevation Points

Ar. Designed by:	
St. Designed by:	
Drawn by:	Eng. Mujib Rashidi
Checked by:	Eng. Yar Muhamud
Approved by:	

Drawing Title:	Site Plan	Sheet No.: 03/05
Drawing No.:	C-03	
Scale:	1:100	

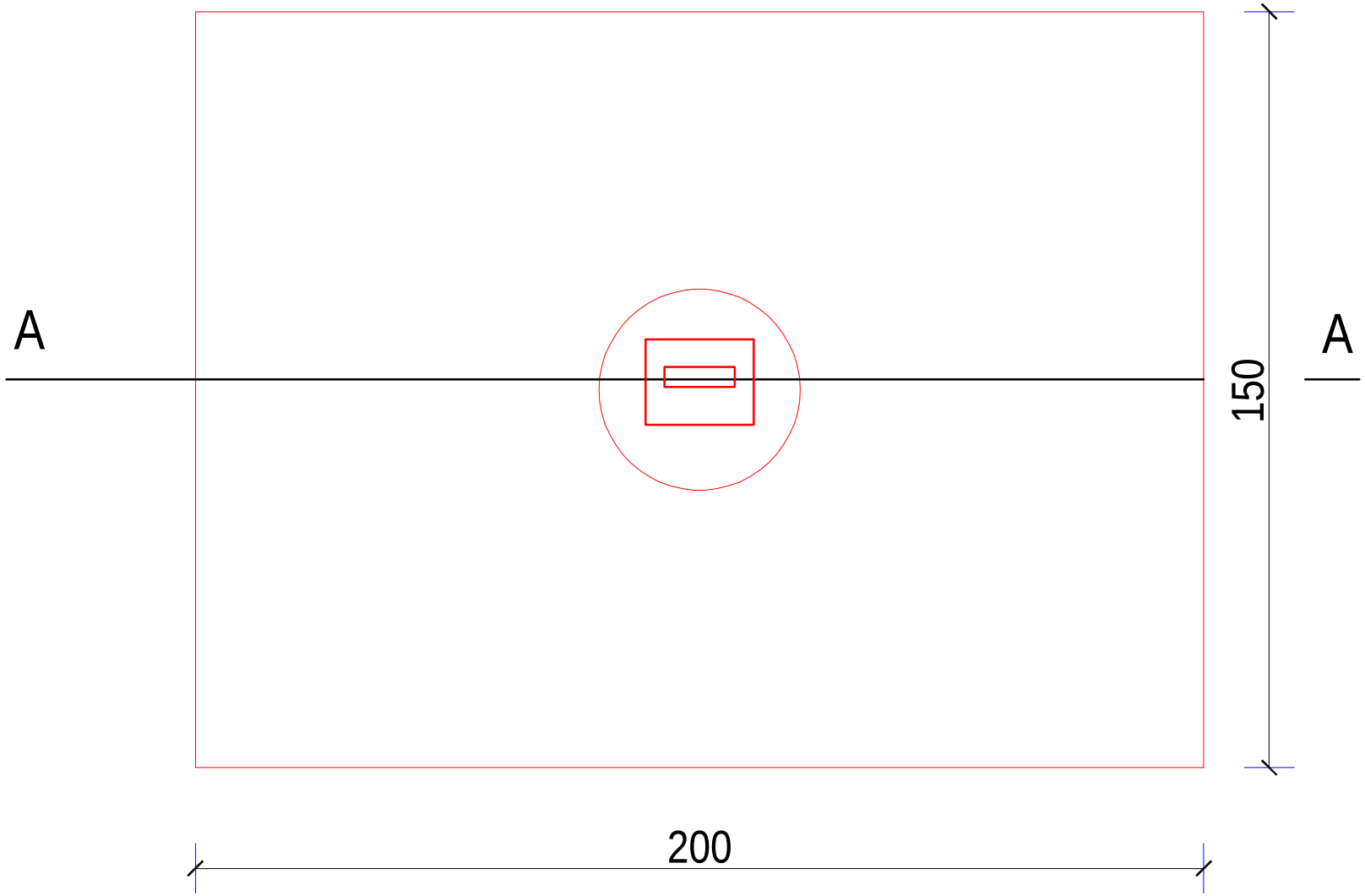

No.	Revision/ Issue	Date

PROJECT NAME:
Construction of Pipe Scheme

LOCATION:
Cheelangom Village,
Sare Pul Province, Afghanistan

Well Apron Plan

Ar. Designed by:	
St. Designed by:	
Drawn by:	Eng. Jawed Asaee
Checked by:	Eng. Yar Muhamud
Approved by:	

Drawing Title:	Site Plan	Sheet No.: 04/05
Drawing No.:	C-04	
Scale:	1:03	

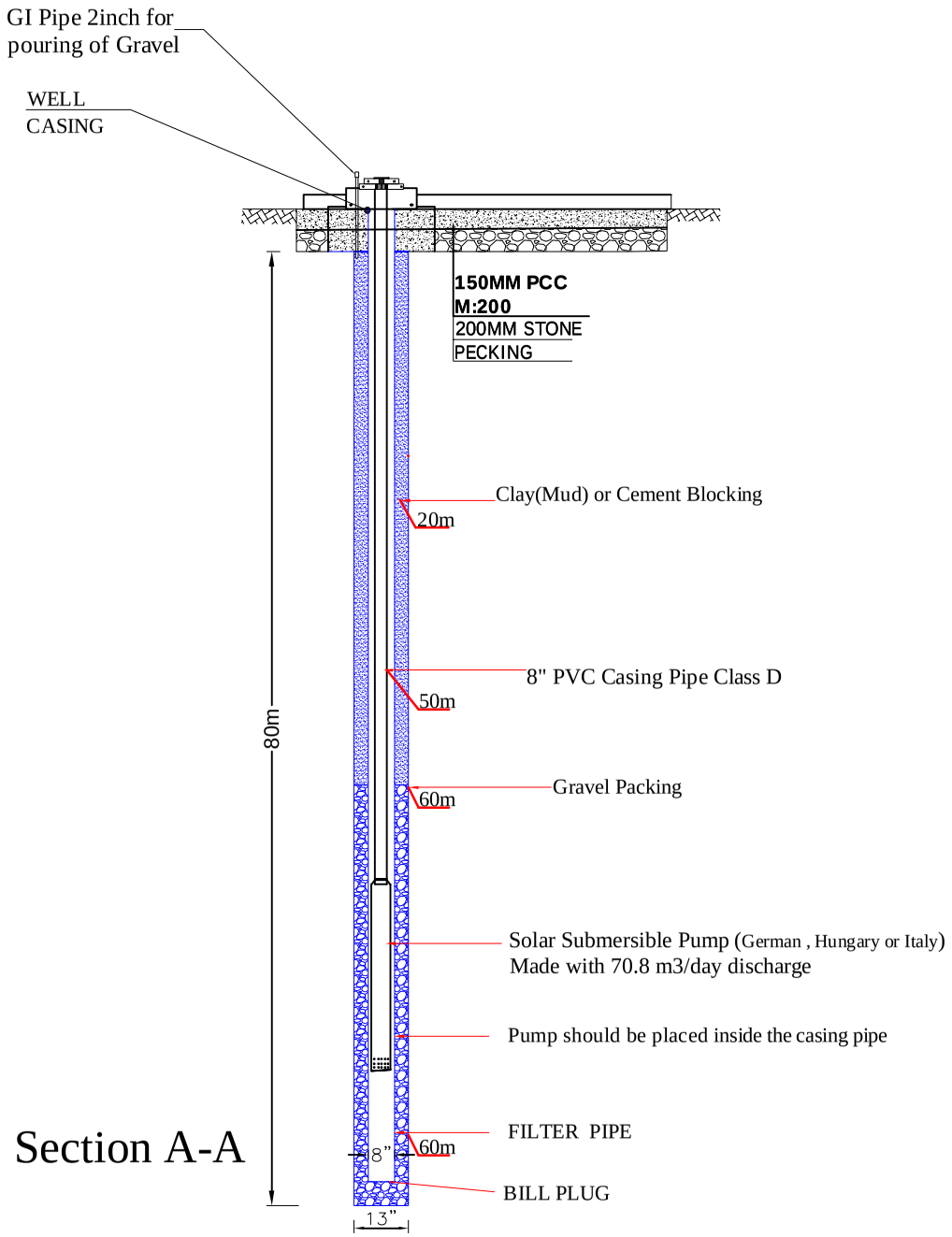

Section A-A

Notes

2-The working pressure for pipes and valves will be 16 or 20 bar (290 PSI)

3- If the ground stratum are made of bed rocks it no need for installation of casing pipes. if the stratum are made of Loss soil it should be stablized by installation casing pipes.

4-Each drilled strata depth should be noted and soil sample should be kept in a sample box separately .

5-Pump test for 8 hours.

6-the depth of filter pipe has considered based on the previous experience . the true depth will be determined after well practical drilling.

ORGANIZATION FOR RELIEF DEVELOPMENT
(ORD)

No.	Revision/ Issue	Date

PROJECT NAME:
Construction of Pipe Scheme

LOCATION:
Cheelangom Village,
Sare Pul Province, Afghanistan

Section A-A

Ar. Designed by:	
St. Designed by:	
Drawn by:	Eng. Jawed Asaee
Checked by:	Eng. Yar Mohamud
Approved by:	

Drawing Title:	Section	Sheet No.: 03/07
Drawing No.:	C-03	
Scale:	1:75	

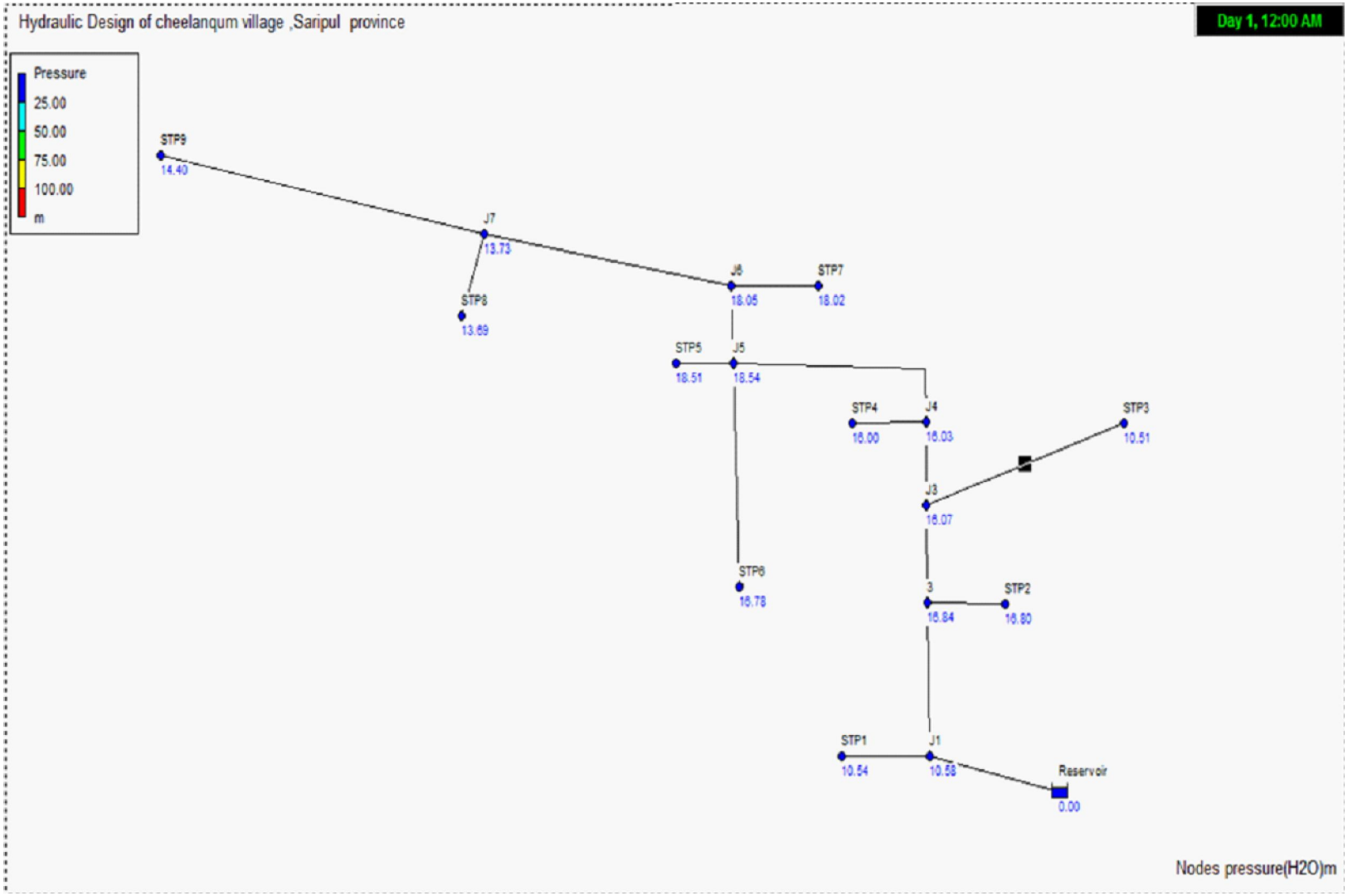

ORGANIZATION FOR RELIEF DEVELOPMENT
(ORD)

No.	Revision/ Issue	Date

PROJECT NAME:
Construction of Pipe Scheme

LOCATION:
Chelanqum Village,
Sare Pul Province - Afghanistan

Pressure

Ar. Designed by:	
St. Designed by:	
Drawn by:	Eng. Hasiburahman
Checked by:	Eng. Yar Muhamad
Approved by:	

Drawing Title:	Pressure	Sheet No.:
Drawing No.:		
Scale:		

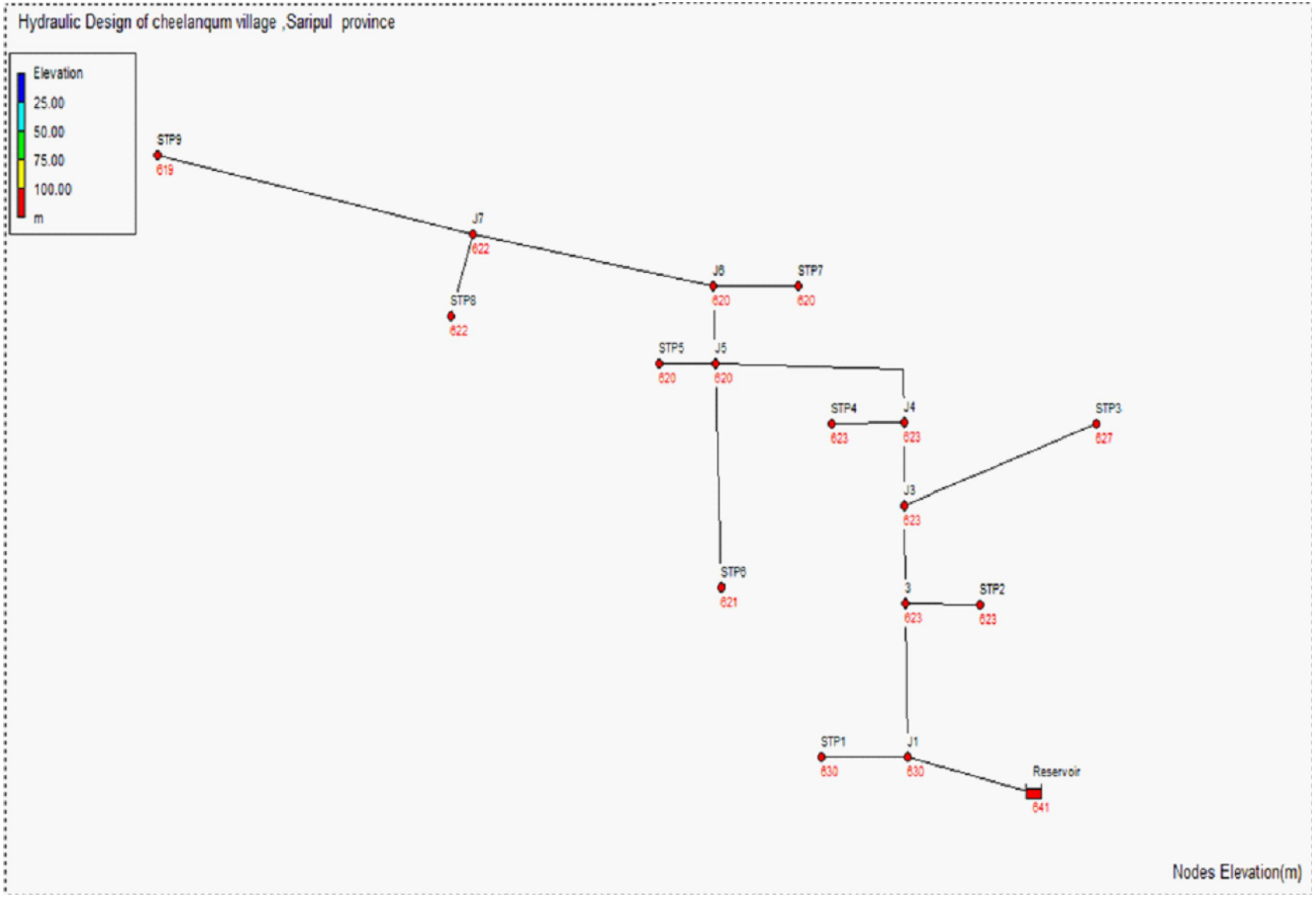

ORGANIZATION FOR RELIEF DEVELOPMENT
(ORD)

No.	Revision/ Issue	Date

PROJECT NAME:
Construction of Pipe Scheme

LOCATION:
Chelanqum Village,
Sare Pul Province - Afghanistan

Elevation Points

Ar. Designed by:	
St. Designed by:	
Drawn by:	Eng. Hasiburahman
Checked by:	Eng. Yar Mohamud
Approved by:	

Drawing Title:	Elevation	Sheet No.:
Drawing No.:	C-10	
Scale:		

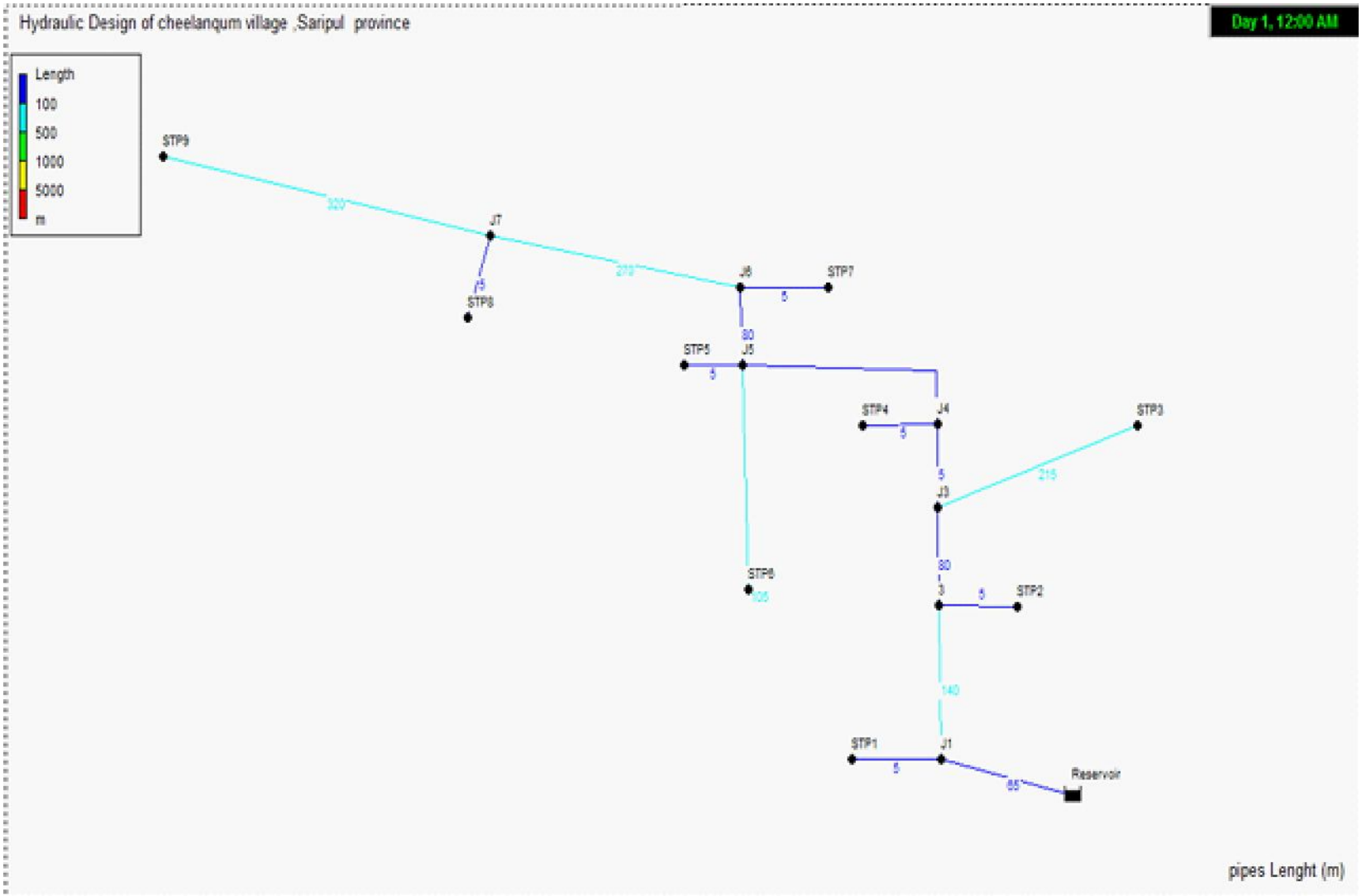

ORGANIZATION FOR RELIEF DEVELOPMENT
(ORD)

No.	Revision/ Issue	Date

PROJECT NAME:
Construction of Pipe Scheme

LOCATION:
Chelanqum Village,
Sare Pul Province - Afghanistan

Length Measure

Ar. Designed by:	
St. Designed by:	
Drawn by:	Eng. Hasiburahman
Checked by:	Eng. Yar Muhamad
Approved by:	

Drawing Title:	Length	Sheet No.:
Drawing No.:	C-11	
Scale:		

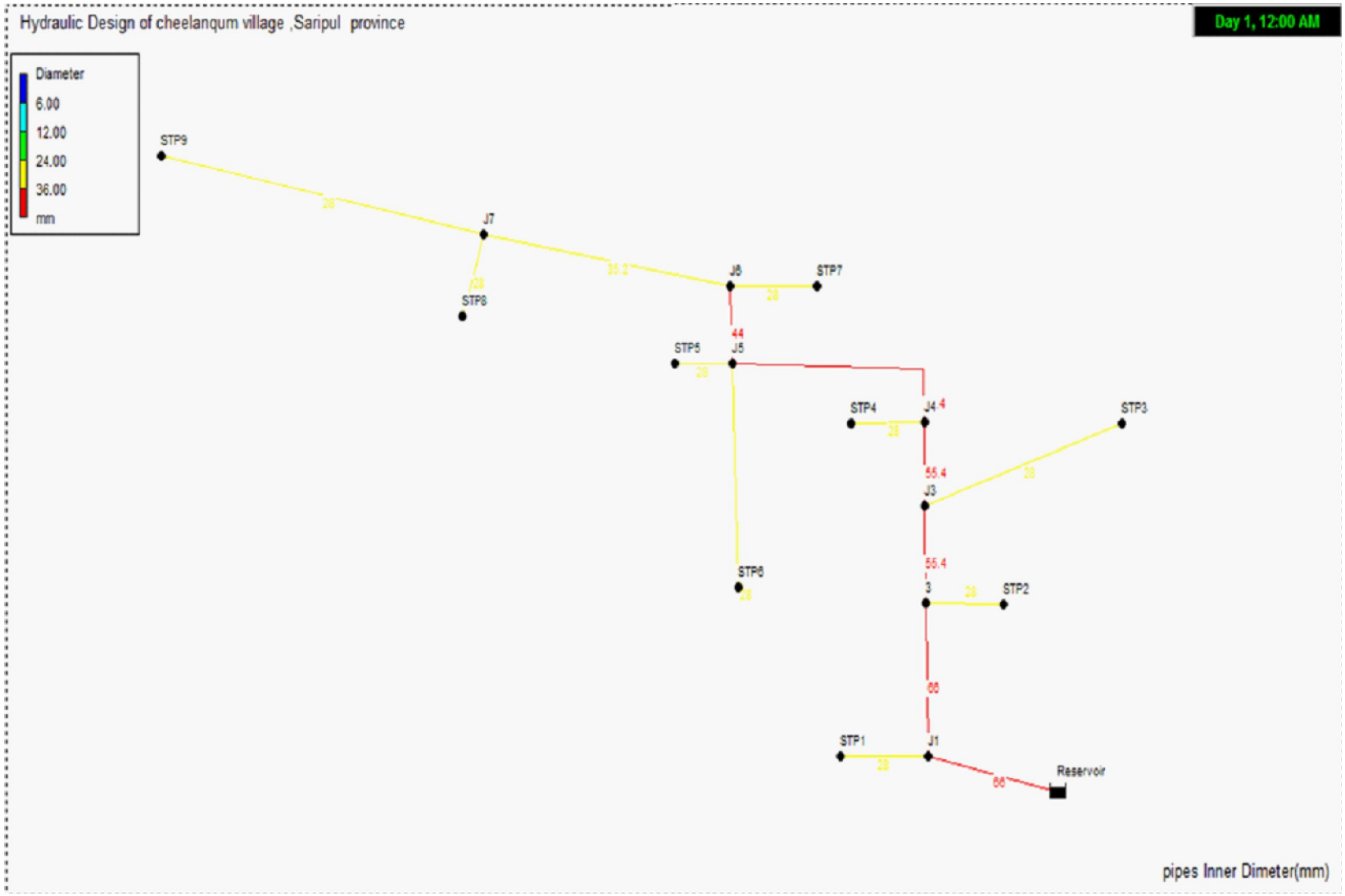

ORGANIZATION FOR RELIEF DEVELOPMENT
(ORD)

No.	Revision/ Issue	Date

PROJECT NAME:
Construction of Pipe Scheme

LOCATION:
Chelanqum Village,
Sare Pul Province - Afghanistan

Diameter

Ar. Designed by:	
St. Designed by:	
Drawn by:	Eng. Hasiburahman
Checked by:	Eng. Yar Muhamud
Approved by:	

Drawing Title:	Diameter	Sheet No.:
Drawing No.:	C-12	
Scale:		

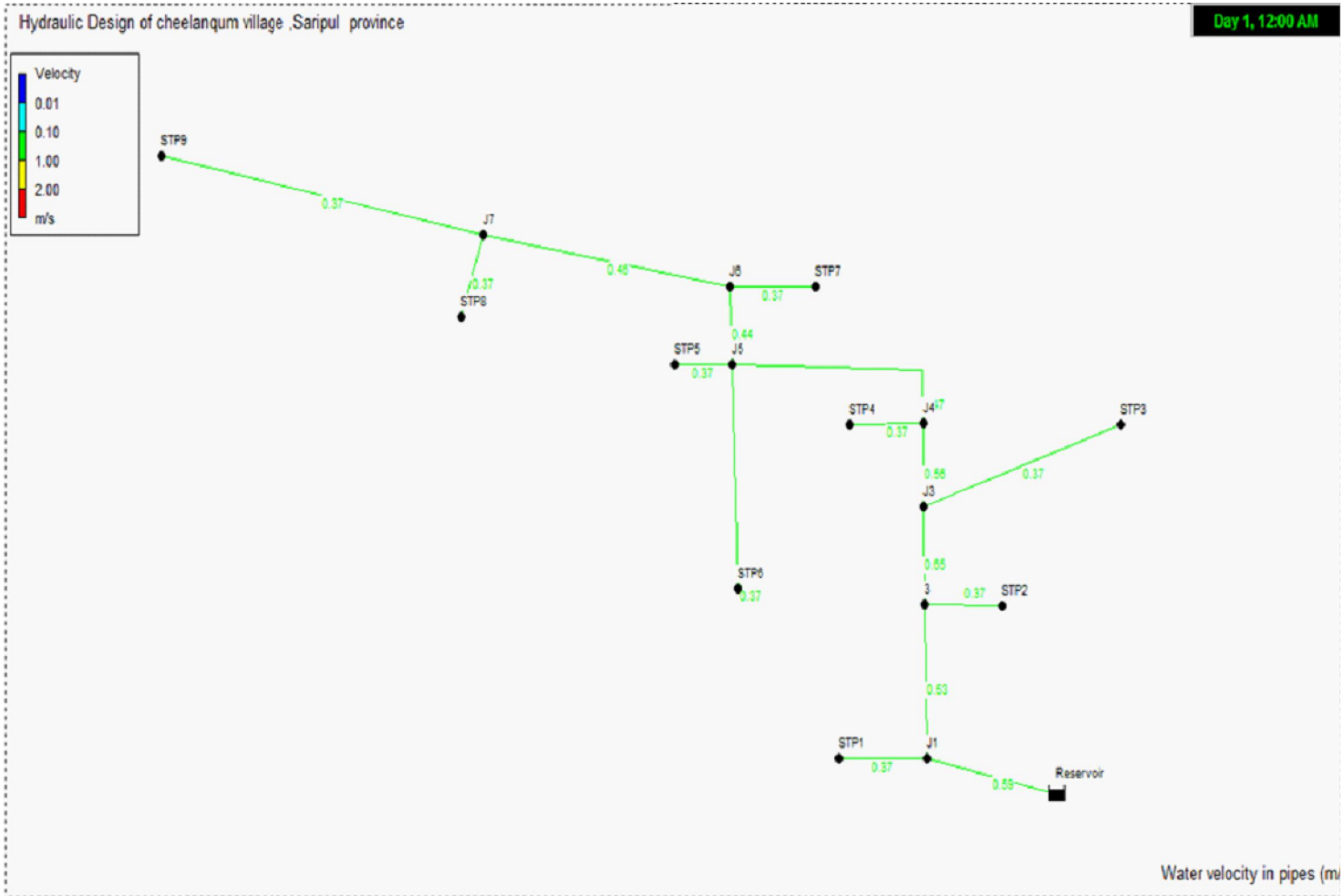

ORGANIZATION FOR RELIEF DEVELOPMENT
(ORD)

No.	Revision/ Issue	Date

PROJECT NAME:
Construction of Pipe Scheme

LOCATION:
Chelanqum Village,
Sare Pul Province - Afghanistan

Velocity

Ar. Designed by:	
St. Designed by:	
Drawn by:	Eng. Hasiburahman
Checked by:	Eng. Yar Muhamad
Approved by:	

Drawing Title:	Velocity	Sheet No.:
Drawing No.:	C-13	13
Scale:		

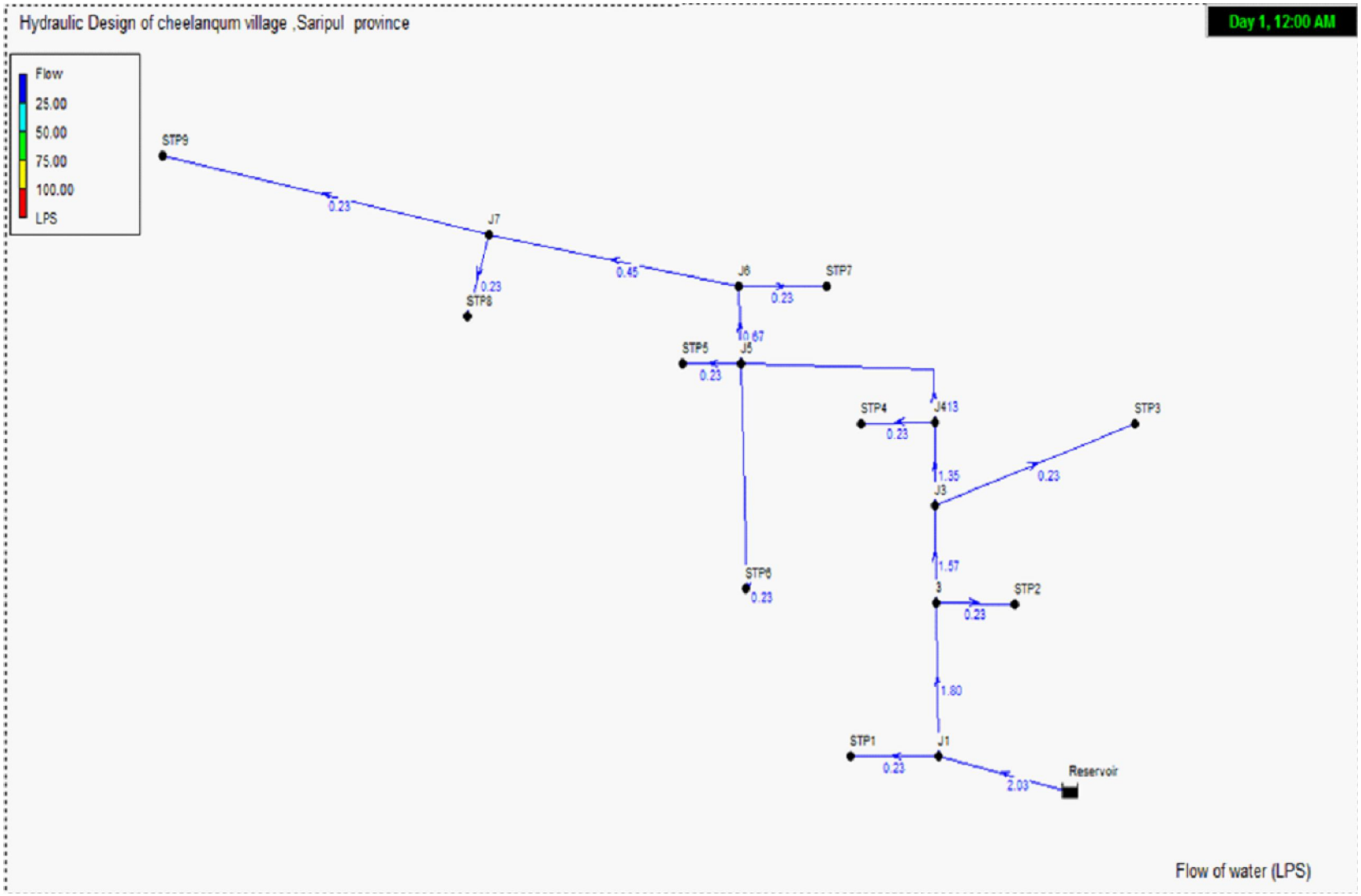

ORGANIZATION FOR RELIEF DEVELOPMENT
(ORD)

No.	Revision/ Issue	Date

PROJECT NAME:
Construction of Pipe Scheme

LOCATION:
Chelanqum Village,
Sare Pul Province - Afghanistan

Flow

Ar. Designed by:	
St. Designed by:	
Drawn by:	Eng. Hasiburahman
Checked by:	Eng. Yar Muhamad
Approved by:	

Drawing Title:	Flow	Sheet No.: 13
Drawing No.:	C-13	
Scale:		

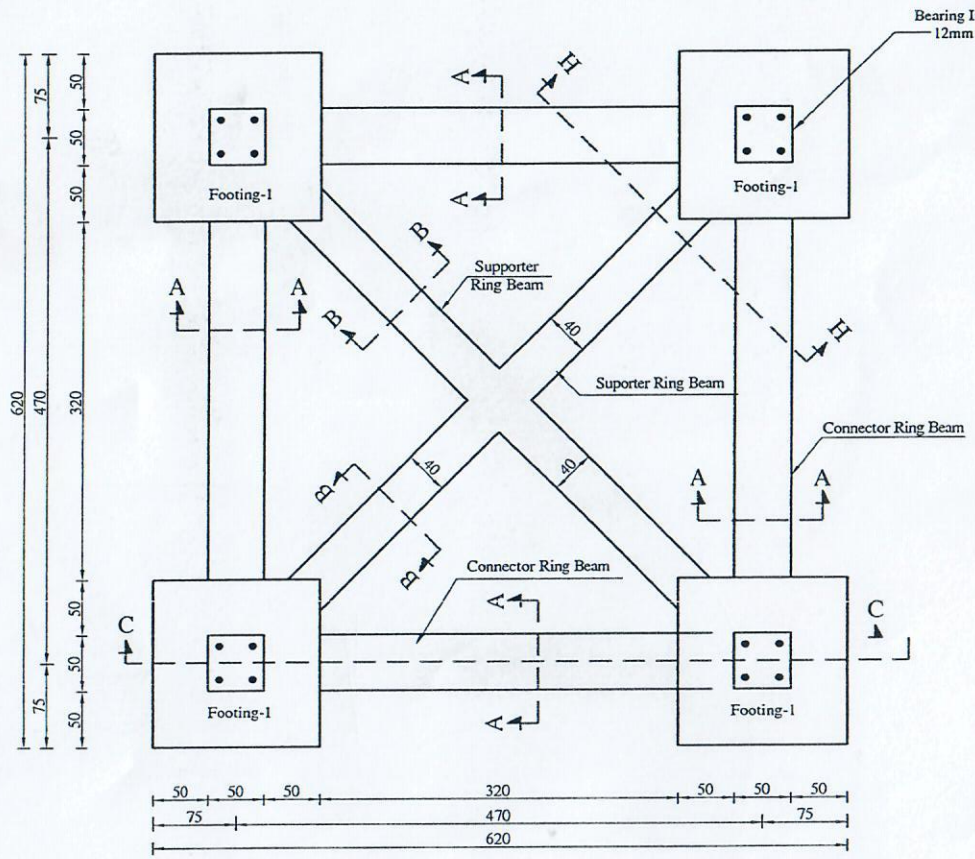

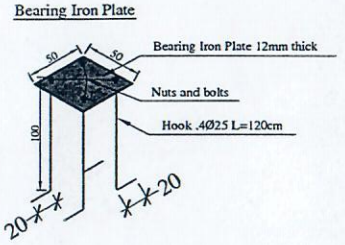

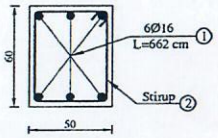

Section A-A

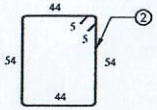

4x37Ø8@15 c/c L=206cm

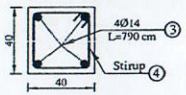

Section B-B

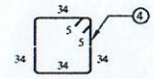

2x43Ø8@15 c/c L=146cm

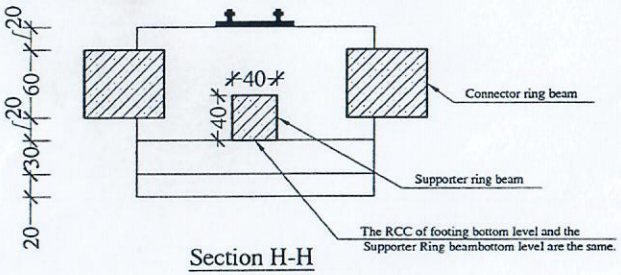

Section H-H

FOUNDATION PLAN FOR ELEVATED WATER TANK

TIS AFGHANISTAN Ministry of Rural Rehabilitation and Development WatSIP	SURVEYED BY	Balkh RRD Engineer	CHECKED BY	Eng. Mahmood	SCALE		SHEET NO.	1/5	PROVINCE	Balkh
	DESIGNED BY	Egn. Najibullah	REVIEWED BY	Eng. Fazel Omer "Zahid"	DATE	01.05.2017			DISTRICT	Charbulak
	DRAWN BY	Egn. Najibullah	APPROVED BY	Eng. Ghulam Qader	DRAWING NO.				VILLAGE	Qawrachi Watani

PROJECT NAME: *Water Supply Project*

DRAWING TITLE: 20 m3 Elevated Steel Water Tank

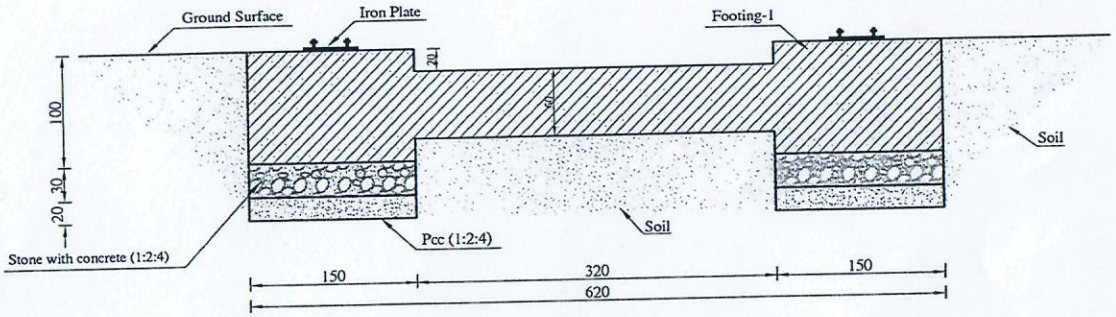

Section C-C

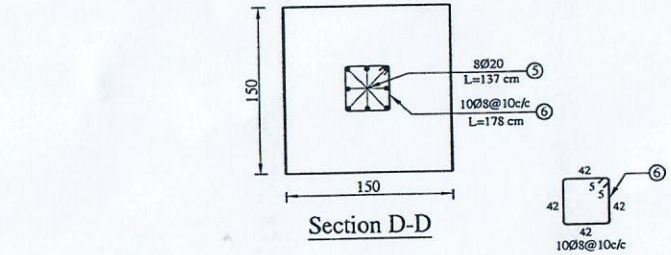

Section D-D

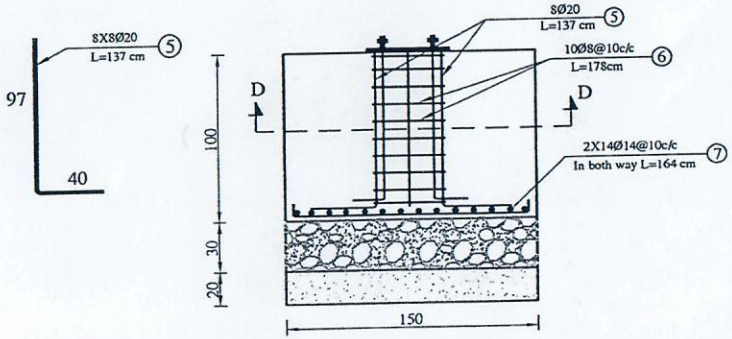

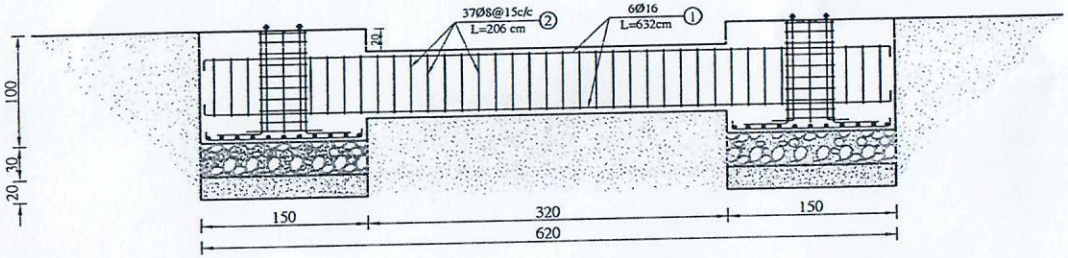

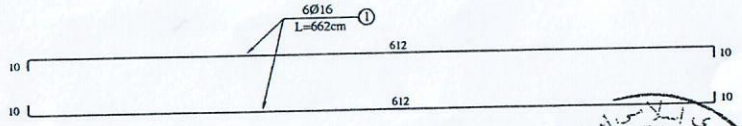

Section C-C
Rienforcement

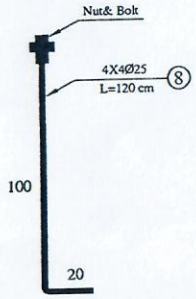

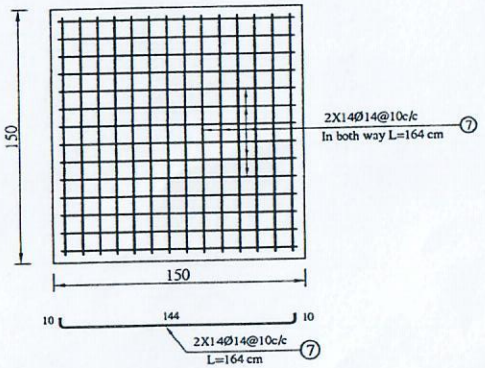

Footing-1

TIS AFGHANISTAN Ministry of Rural Rehabilitation and Development WatSIP	SURVEYED BY	Balkh RRD Engineer	CHECKED BY	Eng. Mahmood	SCALE		SHEET NO. 2/5	PROVINCE	Balkh	PROJECT NAME: Water Supply Project
	DESIGNED BY	Egn. Najibullah	REVIEWED BY	Eng. Fazel Omer "Zahid"	DATE	01.05.2017		DISTRICT	Char bulak	DRAWING TITLE: 20 m3 Elevated Steel Water Tank
	DRAWN BY	Egn. Najibullah	APPROVED BY	Eng. Ghulam Qader	DRAWING NO.			VILLAGE	Qawrachi Watani	

Section G-G

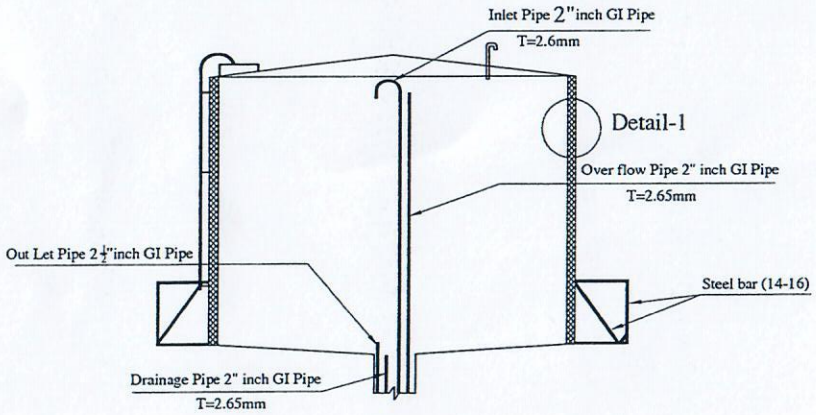

Detail-1

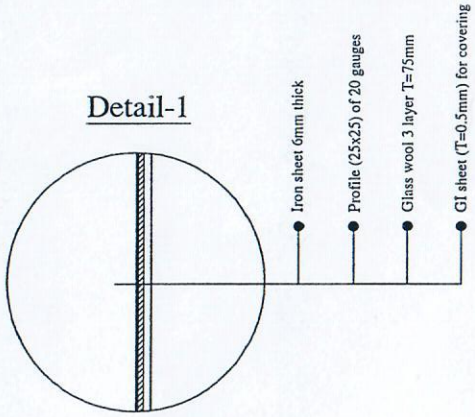

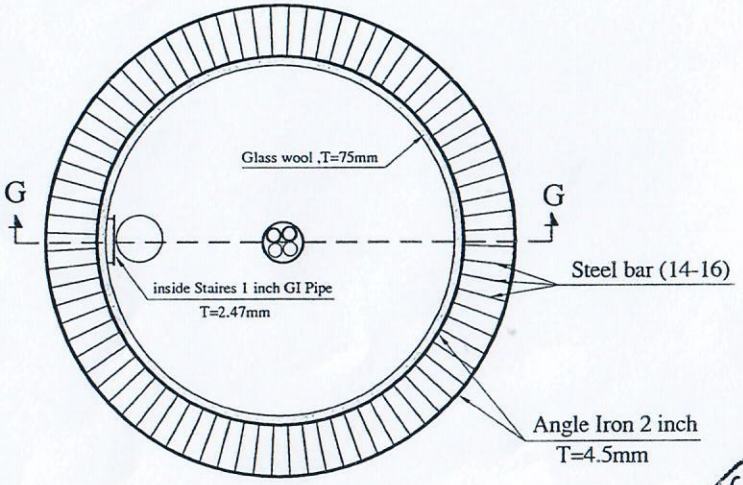

Section F-F

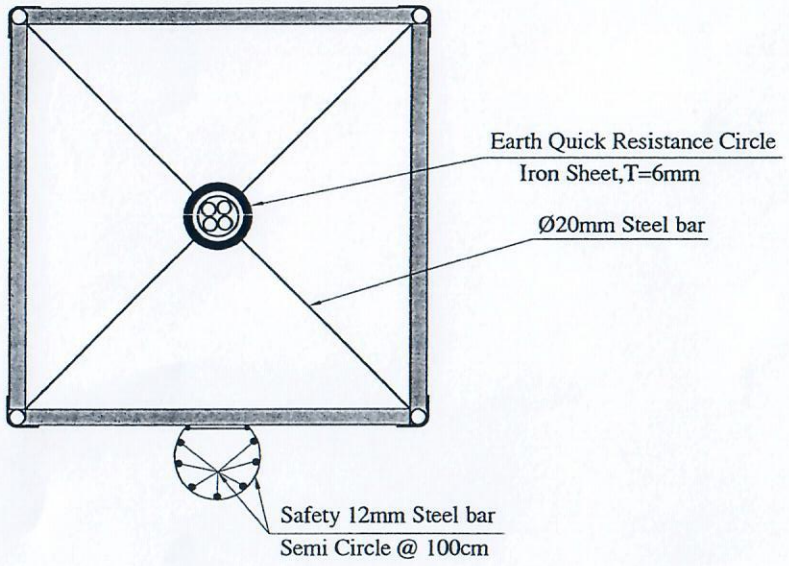

Section E-E

TIS AFGHANISTAN Ministry of Rural Rehabilitation and Development WatSIP	SURVEYED BY	Balkh RRD Engineer	CHECKED BY	Eng. Mahmood	SCALE		SHEET NO.	5/5	PROVINCE	Balkh	PROJECT NAME: Water Supply Project
	DESIGNED BY	Egn. Najibullah	REVIEWED BY	Eng. Fazel Omer "Zahid"	DATE	01.05.2017			DISTRICT	Char bulak	DRAWING TITLE: 20 m3 Elevated Steel Water Tank
	DRAWN BY	Egn. Najibullah	APPROVED BY	Eng. Ghulam Qader	DRAWING NO.				VILLAGE	Qawrachi Watani	

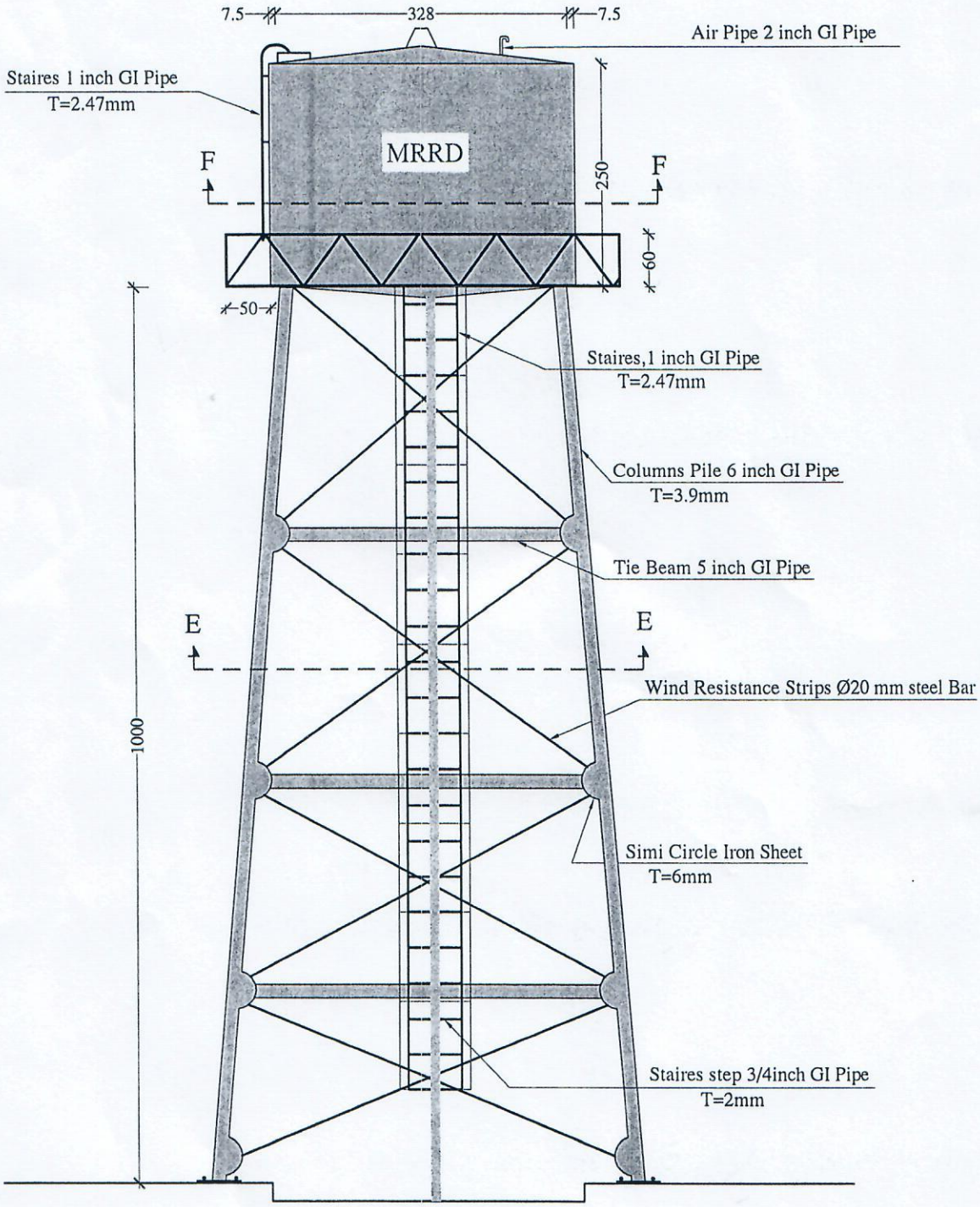

TIS AFGHANISTAN Ministry of Rural Rehabilitation and Development WatSIP	SURVEYED BY	Balkh RRD Engineer	CHECKED BY	Eng. Mahmood	SCALE		SHEET NO. 3/5	PROVINCE	Balkh	PROJECT NAME Water Supply Project
	DESIGNED BY	Egn. Najibullah	REVIEWED BY	Eng. Fazel Omer "Zahid"	DATE	01.05.2017		DISTRICT	Char bulak	DRAWING TITLE 20 m3 Elevated Steel Water Tank
	DRAWN BY	Egn. Najibullah	APPROVED BY	Eng. Ghulam Qader	DRAWING NO.			VILLAGE	Qawrachi Watani	