GOVERNMENT OF ISLAMIC REPUBLIC OF AFGHANISTAN

SWIM STRENGTHENING WATERSHED AND IRRIGATION MANAGEMENT

Project Name: Bagh Pahlawan Main Canal Rehabilitation
Province: Balkh
District: Sholgareh

Afghanistan, Balkh
Date: June-25 -2019

TABLE OF CONTENTS FOR BAGH PAHLAWAN MAIN CANAL

SHEET #	SHEET CONTENTS	REMARKS
n/a	GIS Map	
n/a	General Note	
1	General Site Plan	
2 to 8	Plan and Profile	
9 to 10	Cross Sections	
11	Structure List With GPS Coordinates	
12	Intake Structures	
13	Intake and Lining Sections	
14	Protection Wall and Section	
15	Turn out	
16	Turn Out Sections	
17	Slab Culvert	
18	Intake Gate	
19	Turn out Gate	
20	Stop Log	

Bagh Pahlawan Canal
Sholgareh, Balkh

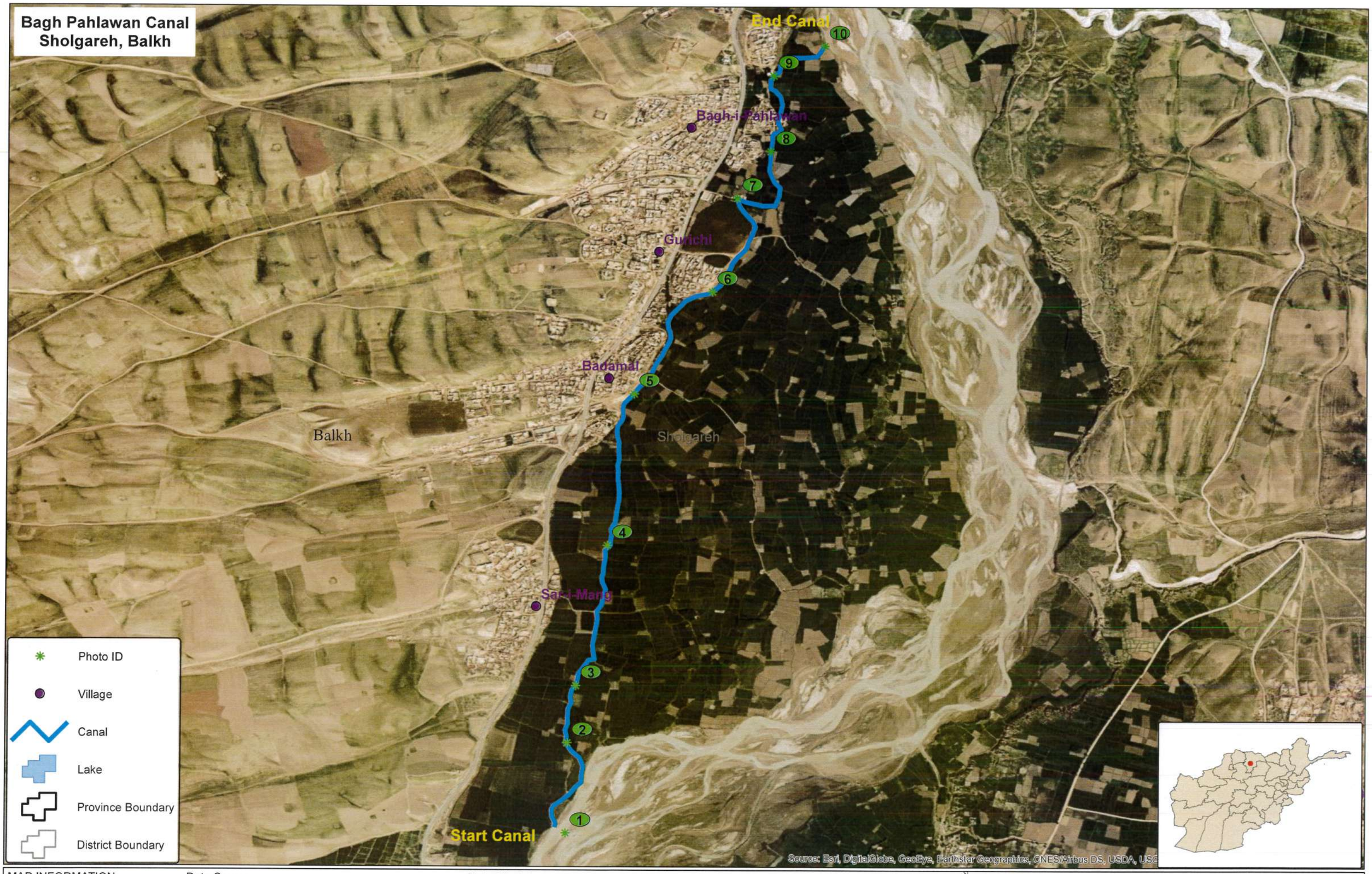

MAP INFORMATION
Map Produced : March 2018
Cartographer: Abdul Razaq
Projection : World Mercator
Datum : WGS 1984

Data Source
Base layer information including boundaries and place names courtesy of the Afghan Geodesy and Cartography Head Office (AGCHO).

Data Disclaimer
All boundaries and map features are approximate and should not be considered authoritative.
While every effort is made to use the best available data, accuracy of features or other information cannot be guaranteed.
Map prepared by the SWIM Project GIS Department.

N W E S

USAID FROM THE AMERICAN PEOPLE | AFGHANISTAN

0 0.2 0.4 0.8 1.2 1.6 Kilometers

GENERAL:

1. SAMPLE OF ALL MATERIALS (STONE, PCC, STEEL GATES, RCC, GRAVEL, SAND, DRY STONE, PVC PIPE, GUARD RILL, WATER STOPPER, ETC.) SHALL BE APPROVED BY SWIM ENGINEER BEFORE THE CONTRACTOR USE FOR THE PROJECT, OTHERWISE SWIM ENGINEERS ARE AUTHORIZED TO REJECT THE USED MATERIALS.
2. ALL CONSTRUCTION WORKS SHALL BE CARRIED OUT WITH CLOSE COORDINATION AND PRIOR APPROVAL OF SWIM ENGINEERS. OTHERWISE SWIM ENGINEERS ARE AUTHORIZED TO REJECT THE EXECUTED WORKS AND CONTRACTOR HAS TO RE-DO IT.
3. ALL QUALITY CONTROL TESTS SHOULD BE CARRIED OUT BY THE CONTRACTOR IN A RECOGNIZED LABORATORY by AECOM SWIMM.
4. TO AVOID DELAY IN IRRIGATION, ALL DIVERSION WILL BE MADE WITH CONSULTATION OF COMMUNITY, EITHER THE DIVERSION SHALL BE MADE LEFT SIDE OR RIGHT SIDE OF THE CANAL

GABION:

1. THE STONE SIZE RANGES FROM 150 MM TO 250 MM. SMALL STONES SHOULD BE AVOIDED. THE STONES USED SHOULD HAVE A MINIMUM SIZE OF NOT LESS THAN "D" (MESH WIDTH) AND NOT GREATER THAN 3.5 TIMES "D", WHERE D IS THE SPECIFIED MESH WIDTH. LARGER STONES CAN BE USED PROVIDED THAT THEIR TOTAL VOLUME DOES NOT EXCEED 5% OF THE CELL VOLUME.

STONE MASONRY:

1. ALL STONE MASONRY WALLS SHALL BE WITH RATIO OF 1:4 CEMENT SAND MORTAR WITH CONSIDERING TO 35% OF MASONRY VOLUME.
2. ALL STONES SHALL BE FREE FROM DEFECTS LIKE CAVITIES, CRACKS, SAND HOLES, FLAWS, INJURIOUS VEINS, PATCHES OF LOOSE OR SOFT MATERIALS, ETC. ALSO, THE PERCENTAGE OF WATER ABSORPTION SHALL GENERALLY NOT EXCEED 5%, CERTIFICATION REQUIRED
3. STONES USED SHALL BE SMALL ENOUGH TO BE LIFTED AND PLACED BY HAND, LENGTH OF THE STONES SHALL NOT EXCEED THREE TIMES THEIR HEIGHTS, AND THE BREADTH OF THE BASE SHALL NOT BE GREATER THAN THREE-FOURTHS OR THE THICKNESS OF WALL OR LESS THAN 150MM. THE HEIGHT OF STONES FOR RUBBLE MASONRY MAY BE UP TO 300MM
4. STONES WITH ROUND FACES SHALL NOT BE USED AND NEVER EVER ACCEPTABLE.
5. ALL EXPOSED SURFACES OF MORTARED STONE MASONRY SHALL BE POINTED WITH THE CEMENT SAND MORTAR 1:3
6. FOR FACES OF THE STONEMASONRY THAT WILL BE BACKFILLED, CONTRACTOR IS TO MAKES SURE ALL GAPS BETWEEN STONES ARE FILLED WITH MORTAR.

CONCRETE:

1. CONCRETE DESIGN SHOULD BE BASED ON 28 DAYS A COMPRESSIVE STRENGTH OF 25MPa FOR RCC AND 20MPa FOR PCC AS SPECIFIED ON THE DRAWINGS.
2. REINFORCEMENT YIELD STRESS "FY" SHALL NOT BE LESS THAN 60000 PSI
3. A MAXIMUM OF 25% STONE WITH A MAXIMUM STONE SIZE OF (25 to 40) CM TO BE USED IN BOULDER CONCRETE. THE CONCRETE MARK SHALL BE 15MPa AS SPECIFIED IN DESIGN AND DRAWINGS.
4. SAND OR FINE AGGREGATE SHALL FREE FROM SALT, ALKALI, CALCIUM SULPHATE OR VEGETATION AND IT SHALL NOT CONTAIN MORE THAN 0.5 PERCENT BY WEIGHT CLAY.
5. AGGREGATE: - COARSE AGGREGATE SHALL CONSIST OF CRUSHED GRAVEL WITH THE MAX SIZE OF 20MM.
6. WATER USED FOR ALL CONCRETE MIXTURE AND CONCRETE CURING SHALL BE FROM A SOURCE APPROVED BY THE SWIM ENGINEER AND AT THE TIME OF USE SHALL BE FREE FROM CONTAMINANTS.
7. THE MAXIMUM SLUMP FOR CONCRETE SHOULD BE BETWEEN (5-7.5) CM.
8. CONCRETE COMPACTION SHOULD BE DONE BY USING CONCRETE VIBRATOR AT THE TIME OF POURING IN SUCH A WAY TO FORM A SOLID COMPACT CONCRETE.
9. ALL CONCRETE AND MASONRY WORKS CURING SHOULD BE CONTINUED FOR 14 DAYS.
10. DURING COLD WEATHER ALL CONCRETING AND MASONRY WORKS SHOULD BE STOPPED, OR THE CONTRACTOR HAS TO CONSIDER COLD WEATHER CONCRETING PROCEDURE AS ACCEPTED BY THE SWIM ENGINEER.
11. CONCRETE SHUTTERING/FRAMEWORK SHOULD BE DONE WITH HIGH STABILITY AND PROPER BRACING.
12. FOR ALL CONCRETE WORKS (RCC, PCC, BOULDER CONCRETE, MORTAR AND GROUT) SHALL BE MIXED BY CONCRETE MIXER. HAND MIXING IS NOT PERMISSIBLE UNLESS THE VOLUME OF CONCRETE IS LESS THAN $1M^3$ AND SHALL BE VERIFIED BY SWIM ENGINEERS AS WELL.
13. THE CONTRACTOR SHALL HAVE AN EXPERIENCED SITE ENGINEER FULL TIME ON THE PROJECT SITE FOR FOLLOW UP THE DESIGN, DRAWINGS AND QUALITY CONTROL PURPOSES. EXECUTION OF WORKS WITHOUT PRESENCE OF SITE ENGINEER IS NOT ACCEPTABLE AND PAYABLE BY SWIM.
14. TWO-COAT PORTLAND CEMENT-BASED PLASTER SHALL BE APPLIED IN ACCORDANCE WITH ASTM C 926 OR EQUIVALENT. THE FINAL COAT SHALL BE FINISHED TO A TRUE AND EVEN SURFACE FREE FROM ROUGH AREAS, CHECKS, OR BLEMISHES. NOMINAL PLASTER FINISH THICKNESS SHALL BE 20MM OR MORE AS DIRECT BY QC IN ENGINEER IN THE SITE).
15. INSTALLATION OF PVC OR HDPE WATER STOPPERS MUST BE SECURELY POSITIONED IN THE FORMS TO PREVENT DEFLECTION OR MISALIGNMENT DURING CONCRETE PLACEMENT. TYPE OF WATER STOPPER SHALL BE CONFORM WITH ASTM D412 AND ASTM D2240.

BACKFILLING:

1. BACKFILLING MATERIAL SHOULD BE PROPERLY TESTED AND SELECTED TO BE SUITABLE AS PER APPROVAL OF SWIM ENGINEER AND STANDARD PRACTICE.
2. FOR BACKFILLING MAXIMUM THICKNESS OF EACH LOOSE SOIL LAYER SHOULD NOT MORE THAN 15CM.
3. STANDARD COMPACTION TESTS SHOULD BE CARRIED OUT FOR THE BACKFILLING LAYERS BY LAYERS.
4. THE PERCENTAGE OF COMPACTION SHOULD BE NOT LESS THAN 95% OF THE MAXIMUM DRY DENSITY AS STATED IN DESIGN AND DRAWINGS.

BAGHE PAHLAWAN BENCHMARK

S#	NORTHING	EASTING	ELEVATION	DESCRITION
1	36.416443	66.9013023	532.71	BM1
2	36.42072	66.9013582	531.59	BM2
3	36.4250076	66.902625	529.5	BM3
4	36.430266	66.903526	528.13	BM4
5	36.434679	66.90367696	525.63	BM5
6	36.439067	66.91634431	523.53	BM6
7	36.442841	66.9090202	522.08	BM7
8	36.446487	66.91011727	518.24	BM8
9	36.450744	66.91277936	513.47	BM9

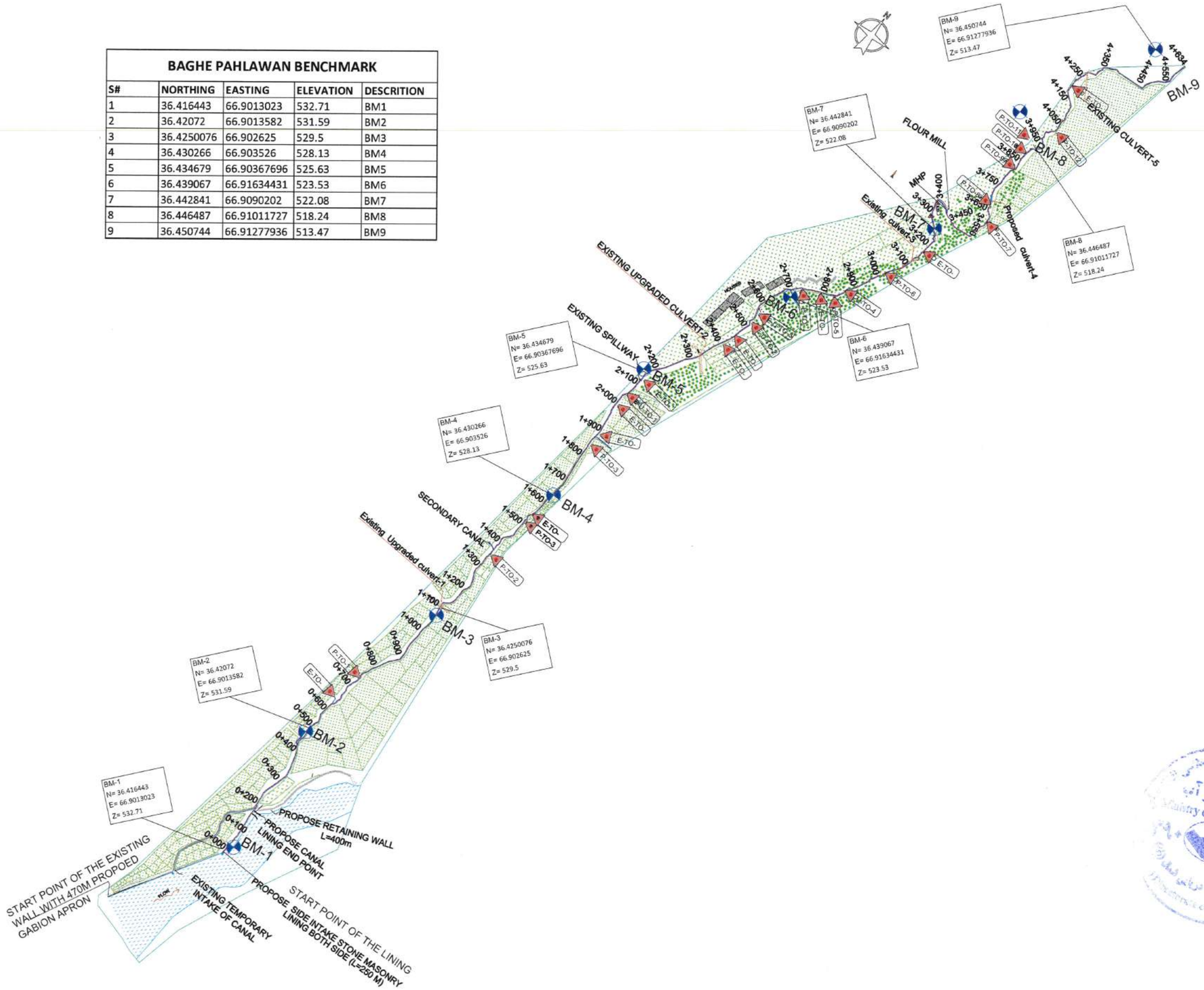

LEGEND:-

Agriculture Area	
Orchard(Garden)	
Bench Mark	
Parental Canal	
Main Canal	
Branch Canal	
P-Turn Out	T O
Residential Area	
Road	
Existing Stone Masonry	
Proposed Stone Masonry	
Existing Culvert	
Proposed Culvert	
Tree	
River	
Residential Area	

	STRENGTHENING WATERSHED & IRRIGATION MANAGEMENT	CANAL NAME	LOCATION	DRAWING TITLE	SURVEYED BY	DRAWING AND DESIGN BY	REVIEWED AND CHECKED BY	SWIM APPROVAL	MEW/RBA APPROVAL	
USAID FROM THE AMERICAN PEOPLE	SWIM	BAGH PAHLAWAN MAIN CANAL	DISTRICT: SHOLGARA PROVINCE: BALKH	SITE PLAN	SWIM	RAFIULLAH RAHMANI ENGINEER (HYDRAULIC SPECIALIST) DATE:	ENG. MOHAMMAD MOBIN OMID QA/QC & ENVIRONMENTAL COMPLIANCE DIRECTOR DATE:	Dr. AHMAD HASEEB PAYAB ACTING CHIEF OF PARTY DATE: 25 JUN 2019	DATE:	SHEET NO. 1 / 20

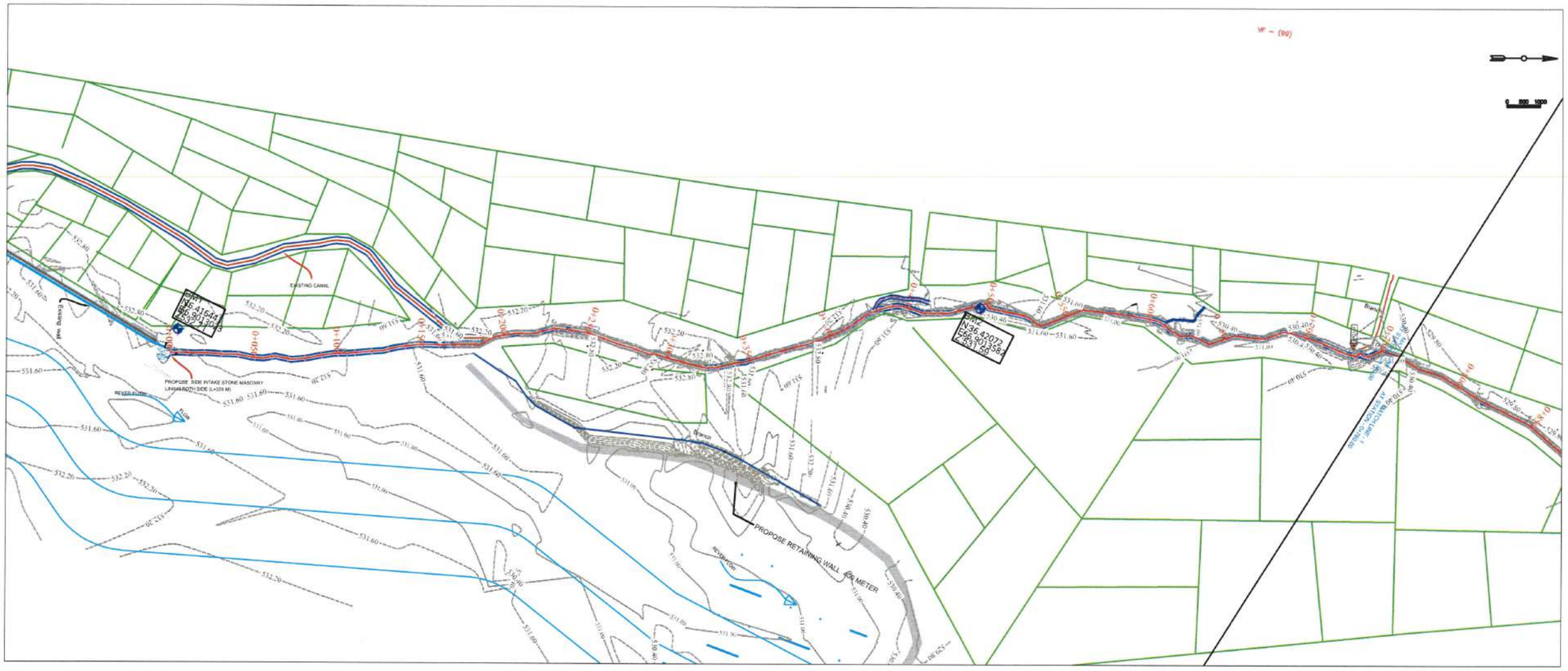

LEGEND:-

Agriculture Area	
Orchard(Garden)	
Bench Mark	
Parental Canal	
Main Canal	
Branch Canal	
P-Turn Out	T O
Residential Area	
Road	
Existing Stone Masonry	
Proposed Stone Masonry	
Existing Culvert	
Proposed Culvert	
Tree	
River	
Residential Area	

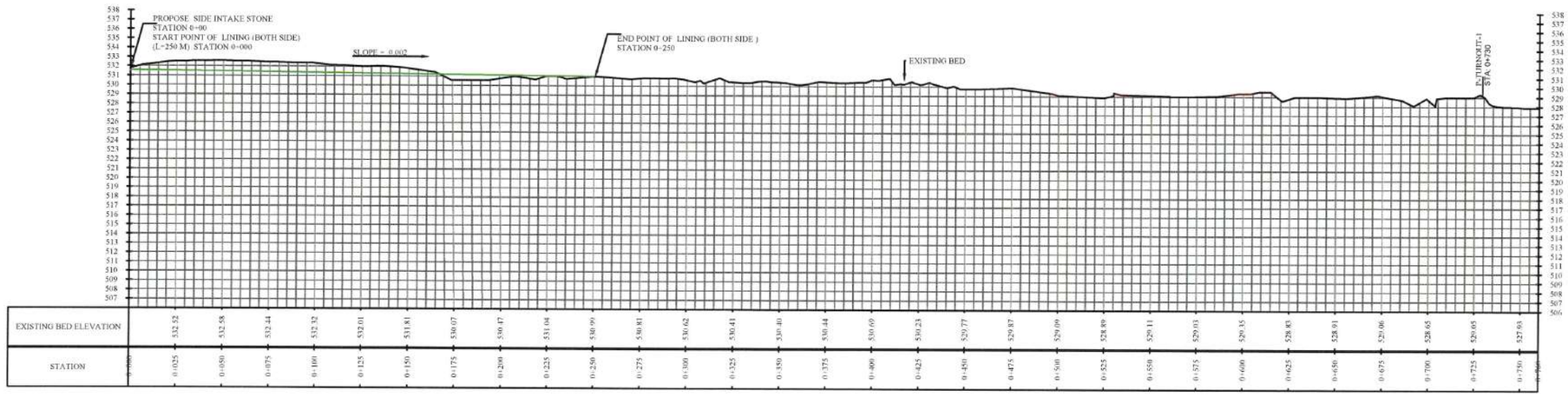

USAID FROM THE AMERICAN PEOPLE	STRENGTHENING WATERSHED & IRRIGATION MANAGEMENT SWIM	CANAL NAME	LOCATION	DRAWING TITLE	SURVEYED BY	DRAWING AND DESIGN BY	REVIEWED AND CHECKED BY	SWIM APPROVAL	MEWORRA APPROVAL	SHEET NO.
		BAGH PAHLAWAN MAIN CANAL	DISTRICT: SHOLGARA PROVINCE: BALKH	PLAN AND PROFILE	SWIM	RAFIULLAH RAHMANI ENGINEER (HYDRAULIC SPECIALIST) DATE	ENG. MOHAMMAD MOBIN OMID QA/QC & ENVIRONMENTAL COMPLIANCE DIRECTOR DATE	Dr. AHMAD HASEEB PAYAB ACTING CHIEF OF PARTY DATE	DATE	2 / 20

A-03 PLAN AND PROFILE
SCALE : 1:1000

LEGEND:-	
Agriculture Area	
Orchard(Garden)	
Bench Mark	
Parental Canal	
Main Canal	
Branch Canal	
P-Turn Out	T O
Residential Area	
Road	
Existing Stone Masonry	
Proposed Stone Masonry	
Existing Culvert	
Proposed Culvert	
Tree	
River	
Residential Area	

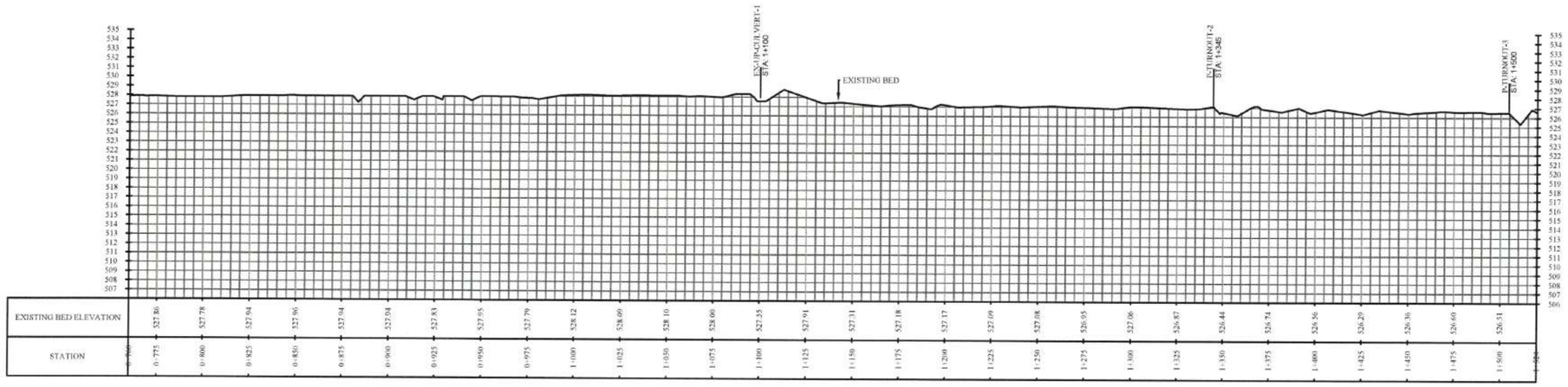

STATION	EXISTING BED ELEVATION
0+775	527.80
0+800	527.78
0+825	527.94
0+850	527.96
0+875	527.94
0+900	527.94
0+925	527.83
0+950	527.95
0+975	527.79
1+000	528.12
1+025	528.09
1+050	528.10
1+075	528.00
1+100	527.55
1+125	527.91
1+150	527.31
1+175	527.18
1+200	527.17
1+225	527.09
1+250	527.08
1+275	526.95
1+300	527.06
1+325	526.87
1+350	526.44
1+375	526.74
1+400	526.56
1+425	526.29
1+450	526.36
1+475	526.60
1+500	526.51

USAID FROM THE AMERICAN PEOPLE	STRENGTHENING WATERSHED & IRRIGATION MANAGEMENT SWIM	CANAL NAME	LOCATION	DRAWING TITLE	SURVEYED BY	DRAWING AND DESIGN BY	REVIEWED AND CHECKED BY	SWIM APPROVAL	MEW&RA APPROVAL	SHEET NO.
		BAGH PAHLAWAN MAIN CANAL	DISTRICT: SHOLGARA PROVINCE: BALKH	PLAN AND PROFILE	SWIM	RAFIULLAH RAHMANI ENGINEER (HYDRAULIC SPECIALIST) DATE:	ENG. MOHAMMAD MOBIN OMID QA/QC & ENVIRONMENTAL COMPLIANCE DIRECTOR DATE:	Dr. AHMAD HASEEB PAYAB ACTING CHIEF OF PARTY DATE: 25 JUN 2012	DATE:	3 / 20

A-04 PLAN AND PROFILE
SCALE : 1:1000

LEGEND:-

Agriculture Area	
Orchard(Garden)	
Bench Mark	
Parental Canal	
Main Canal	
Branch Canal	
P-Turn Out	T O
Residential Area	
Road	
Existing Stone Masonry	
Proposed Stone Masonry	
Existing Culvert	
Proposed Culvert	
Tree	
River	
Residential Area	

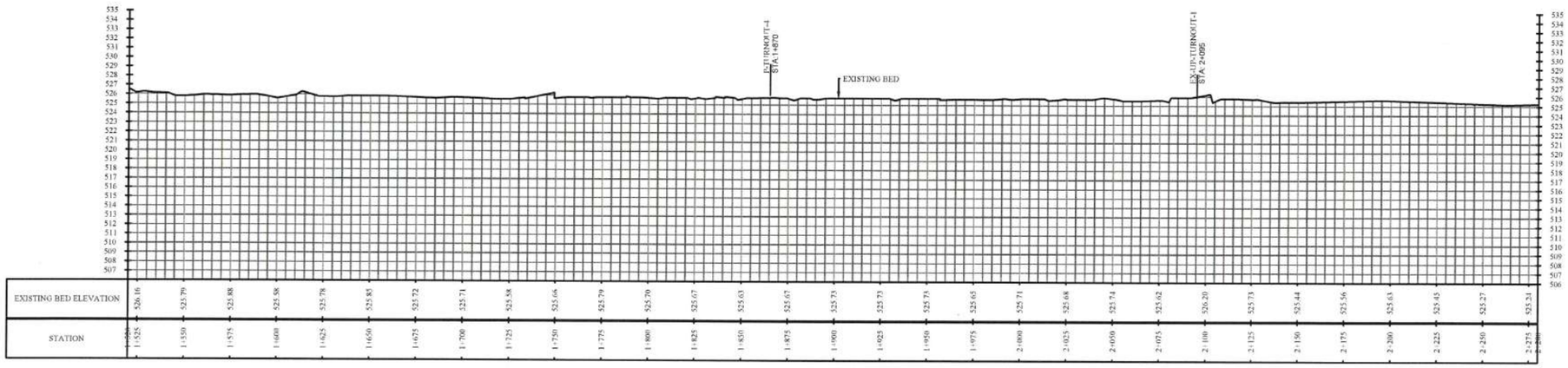

USAID FROM THE AMERICAN PEOPLE	STRENGTHENING WATERSHED & IRRIGATION MANAGEMENT SWIM	CANAL NAME	LOCATION	DRAWING TITLE	SURVEYED BY	DRAWING AND DESIGN BY	REVIEWED AND CHECKED BY	SWIM APPROVAL	MEW/RBA APPROVAL	SHEET NO.
		BAGH PAHLAWAN MAIN CANAL	DISTRICT: SHOLGARA PROVINCE: BALKH	PLAN AND PROFILE	SWIM	RAFIULLAH RAHMANI ENGINEER (HYDRAULIC SPECIALIST) DATE:	ENG. MOHAMMAD MOBIN OMID QA/QC & ENVIRONMENTAL COMPLIANCE DIRECTOR DATE:	Dr. AHMAD HASEEB PAYAB ACTING CHIEF OF PARTY DATE: 25 JUN 2019	DATE:	4 / 20

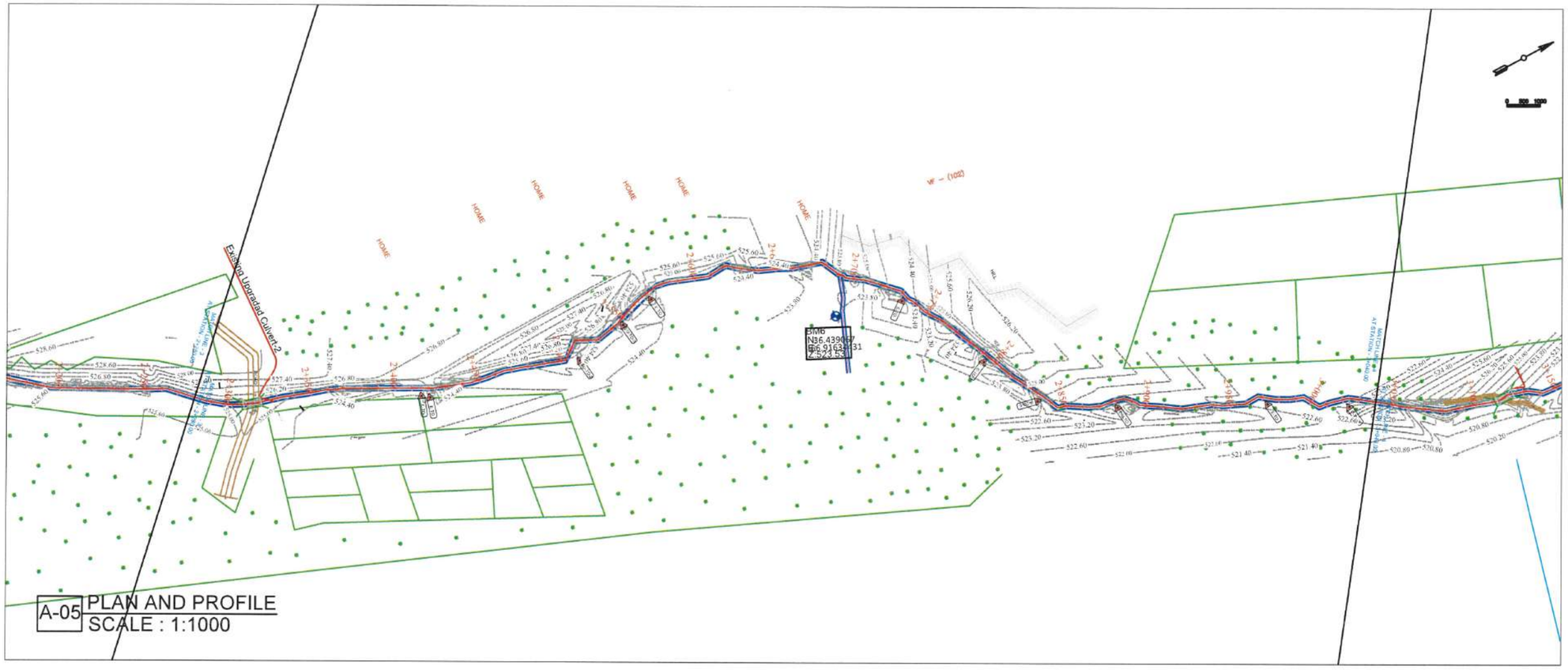

LEGEND:-

Agriculture Area	
Orchard(Garden)	
Bench Mark	
Parental Canal	
Main Canal	
Branch Canal	
P-Turn Out	T O
Residential Area	
Road	
Existing Stone Masonry	
Proposed Stone Masonry	
Existing Culvert	
Proposed Culvert	
Tree	
River	
Residential Area	

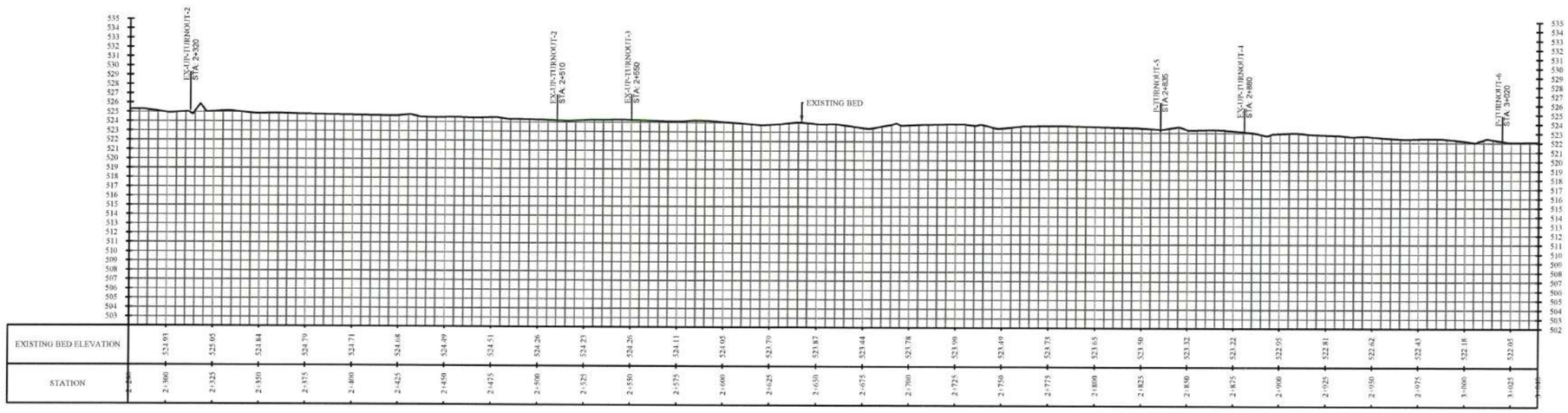

USAID FROM THE AMERICAN PEOPLE	STRENGTHENING WATERSHED & IRRIGATION MANAGEMENT SWIM	CANAL NAME	LOCATION	DRAWING TITLE	SURVEYED BY	DRAWING AND DESIGN BY	REVIEWED AND CHECKED BY	SWIM APPROVAL	MEW/RBA APPROVAL	
		BAGH PAHLAWAN MAIN CANAL	DISTRICT: SHOLGARA PROVINCE: BALKH	PLAN AND PROFILE	SWIM	RAFIULLAH RAHMANI ENGINEER (HYDRAULIC SPECIALIST)	ENG. MOHAMMAD MOBIN OMID QA/QC & ENVIRONMENTAL COMPLIANCE DIRECTOR	Dr. AHMAD HASEEB PAYAB ACTING CHIEF OF PARTY		SHEET NO. 5 / 20
						DATE:	DATE:	DATE:	DATE:	

A-06 PLAN AND PROFILE
SCALE : 1:1000

LEGEND:-

Agriculture Area	
Orchard(Garden)	
Bench Mark	
Parental Canal	
Main Canal	
Branch Canal	
P-Turn Out	T O
Residential Area	
Road	
Existing Stone Masonry	
Proposed Stone Masonry	
Existing Culvert	
Proposed Culvert	
Tree	
River	
Residential Area	

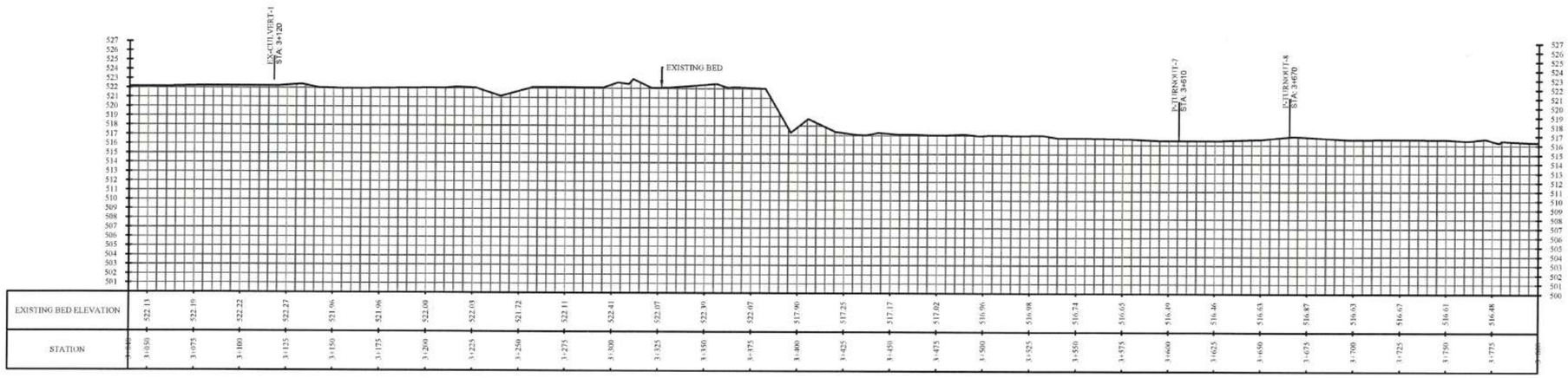

USAID FROM THE AMERICAN PEOPLE	STRENGTHENING WATERSHED & IRRIGATION MANAGEMENT SWIM	CANAL NAME	LOCATION	DRAWING TITLE	SURVEYED BY	DRAWING AND DESIGN BY	REVIEWED AND CHECKED BY	SWIM APPROVAL	MEW/RBA APPROVAL	SHEET NO.
		BAGH PAHLAWAN MAIN CANAL	DISTRICT: SHOLGARA PROVINCE: BALKH	PLAN AND PROFILE	SWIM	RAFIULLAH RAHMANI ENGINEER (HYDRAULIC SPECIALIST)	ENG. MOHAMMAD MOBIN OMID QA/QC & ENVIRONMENTAL COMPLIANCE DIRECTOR	Dr. AHMAD HASEEB PAYAB ACTING CHIEF OF PARTY		6 / 20
						DATE:	DATE:	DATE: 25 JUN 2012	DATE:	

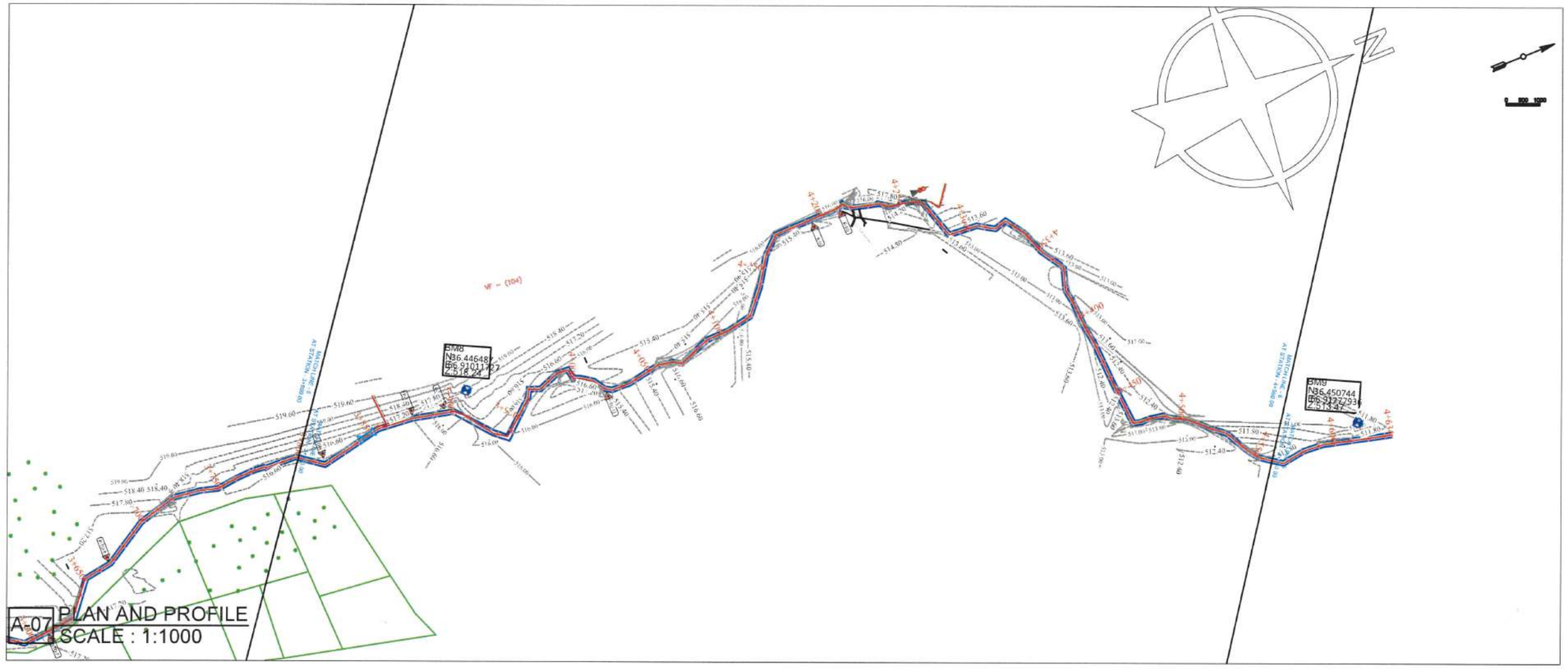

LEGEND:-

Agriculture Area	
Orchard(Garden)	
Bench Mark	
Parental Canal	
Main Canal	
Branch Canal	
P-Turn Out	T O
Residential Area	
Road	
Existing Stone Masonry	
Proposed Stone Masonry	
Existing Culvert	
Proposed Culvert	
Tree	
River	
Residential Area	

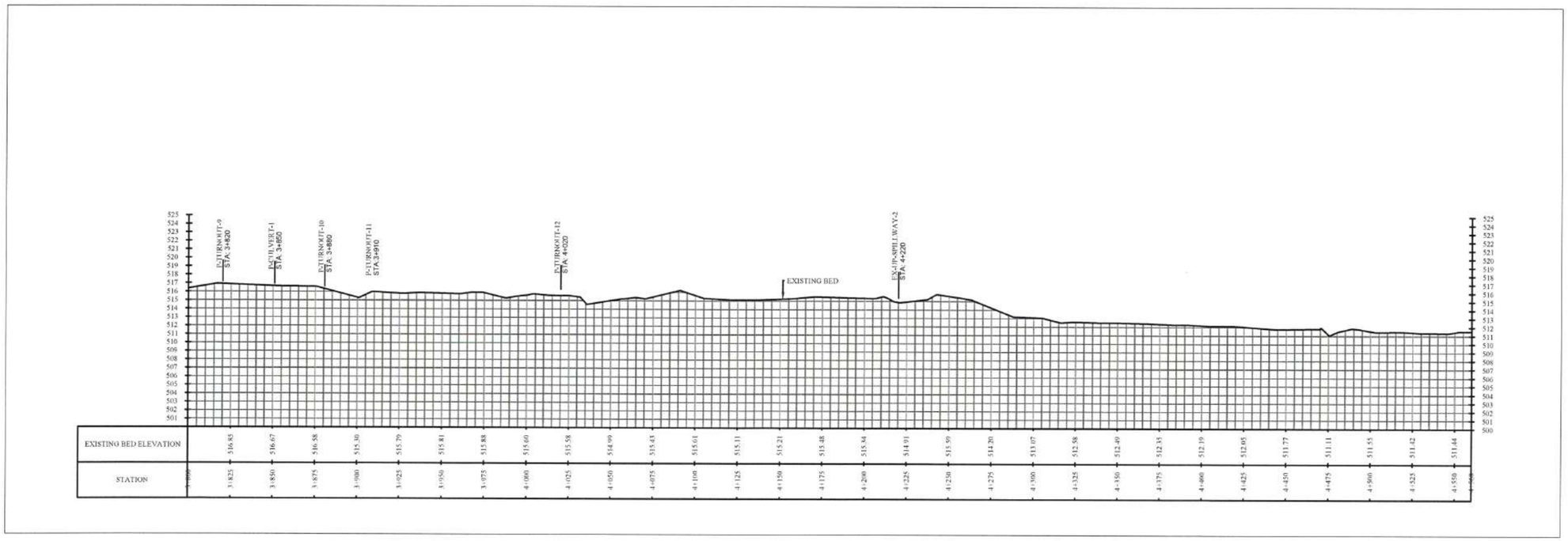

STATION	EXISTING BED ELEVATION
3+825	516.85
3+850	516.67
3+875	516.58
3+900	515.30
3+925	515.79
3+950	515.81
3+975	515.88
4+000	515.60
4+025	515.58
4+050	514.99
4+075	515.43
4+100	515.61
4+125	515.11
4+150	515.21
4+175	515.48
4+200	515.34
4+225	514.91
4+250	515.59
4+275	514.20
4+300	513.07
4+325	512.58
4+350	512.49
4+375	512.35
4+400	512.19
4+425	512.05
4+450	511.77
4+475	511.11
4+500	511.55
4+525	511.42
4+550	511.44

USAID FROM THE AMERICAN PEOPLE	STRENGTHENING WATERSHED & IRRIGATION MANAGEMENT SWIM	CANAL NAME	LOCATION	DRAWING TITLE	SURVEYED BY	DRAWING AND DESIGN BY	REVIEWED AND CHECKED BY	SWIM APPROVAL	MEW/RBA APPROVAL	SHEET NO. 7 / 20
		BAGH PAHLAWAN MAIN CANAL	DISTRICT: SHOLGARA PROVINCE: BALKH	PLAN AND PROFILE	SWIM	RAFIULLAH RAHMANI ENGINEER (HYDRAULIC SPECIALIST) DATE:	ENG. MOHAMMAD MOBIN OMID QA/QC & ENVIRONMENTAL COMPLIANCE DIRECTOR DATE:	Dr. AHMAD HASEEB PAYAB ACTING CHIEF OF PARTY DATE: 23 JUN 2013	DATE:	

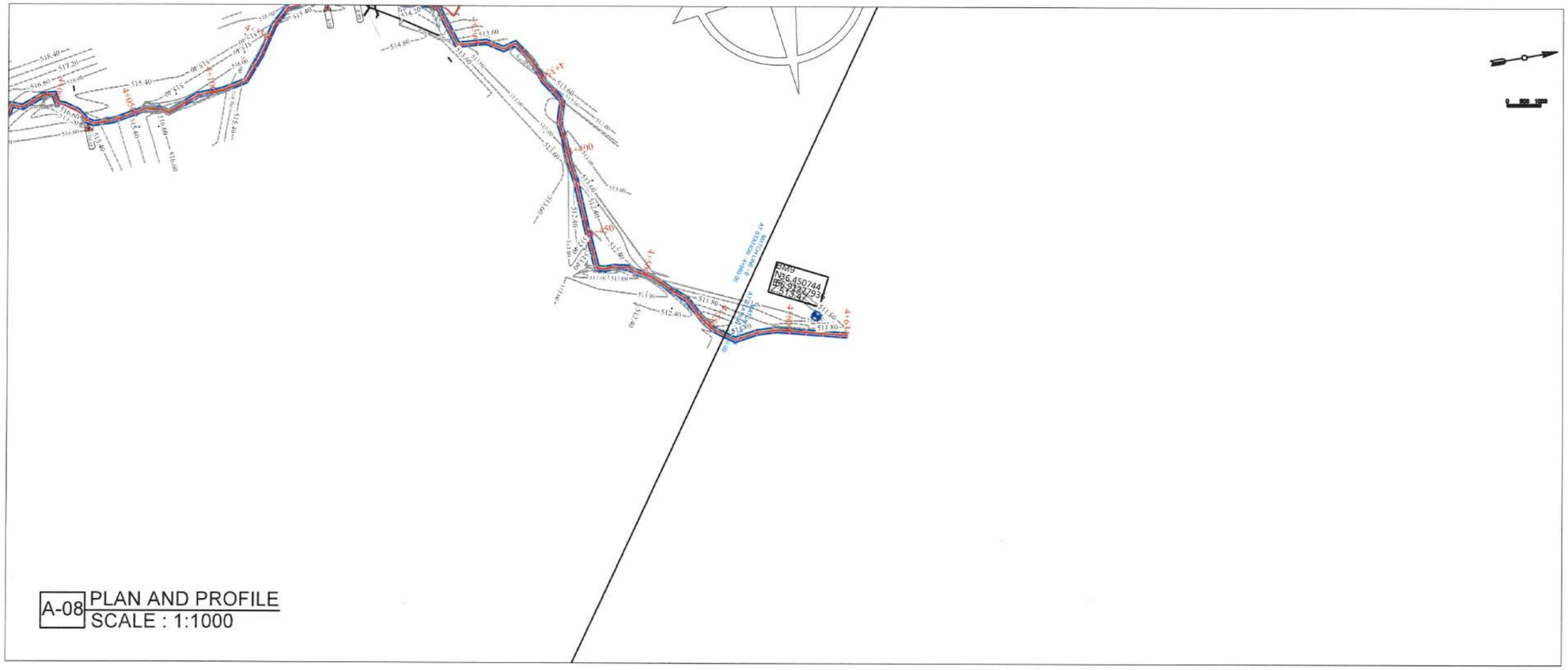

A-08 PLAN AND PROFILE
SCALE : 1:1000

LEGEND:-	
Agriculture Area	
Orchard(Garden)	
Bench Mark	
Parental Canal	
Main Canal	
Branch Canal	
P-Turn Out	T O
Residential Area	
Road	
Existing Stone Masonry	
Proposed Stone Masonry	
Existing Culvert	
Proposed Culvert	
Tree	
River	
Residential Area	

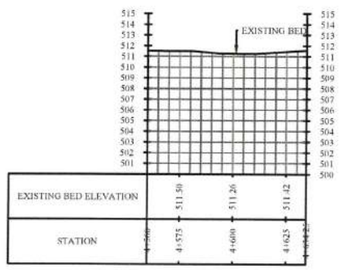

USAID FROM THE AMERICAN PEOPLE	STRENGTHENING WATERSHED & IRRIGATION MANAGEMENT SWIM	CANAL NAME	LOCATION	DRAWING TITLE	SURVEYED BY	DRAWING AND DESIGN BY	REVIEWED AND CHECKED BY	SWIM APPROVAL	MEW/RBA APPROVAL	SHEET NO.
		BAGH PAHLAWAN MAIN CANAL	DISTRICT: SHOLGARA PROVINCE: BALKH	PLAN AND PROFILE	SWIM	RAFIULLAH RAHMANI ENGINEER (HYDRAULIC SPECIALIST) DATE:	ENG. MOHAMMAD MOBIN OMID QA/QC & ENVIRONMENTAL COMPLIANCE DIRECTOR DATE:	Dr. AHMAD HASEEB PAYAB ACTING CHIEF OF PARTY DATE: 25 JUN 2013	DATE:	8 / 20

FILLING AREA=10sqm

CUTTING AREA=12 sqm

Cross Section 0+000.00

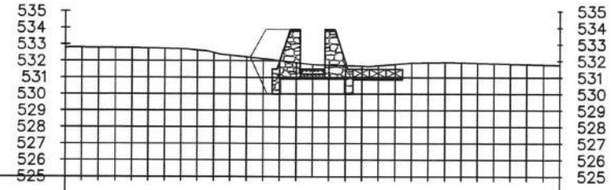

| | | |

FILLING AREA=7sqm

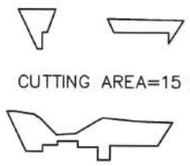

CUTTING AREA=15 sqm

Cross Section 0+200.00

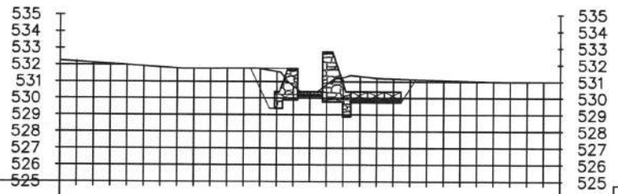

OFFSET	EXISTING BED ELEVATIONS	DESIGN BED
-15.00	532.24	
-14.00	532.23	
-13.00	532.21	
-12.00	532.20	
-11.00	532.19	
-10.00	532.17	
-9.00	532.16	
-8.00	532.15	
-7.00	532.13	
-6.00	532.12	
-5.00	532.11	
-4.00	532.09	
-3.00	532.08	
-2.00	531.85	
-1.00	530.72	
0	530.38	531.10
1.00	530.82	
2.00	531.76	
3.00	532.09	
4.00	532.06	
5.00	532.03	
6.00	532.00	
7.00	531.97	
8.00	531.94	
9.00	531.90	
10.00	531.87	
11.00	531.84	
12.00	531.82	
13.00	531.81	
14.00	531.80	
15.00	531.78	

FILLING AREA=8sqm

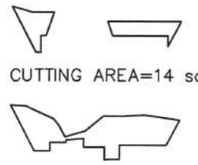

CUTTING AREA=14 sqm

Cross Section 0+250.00

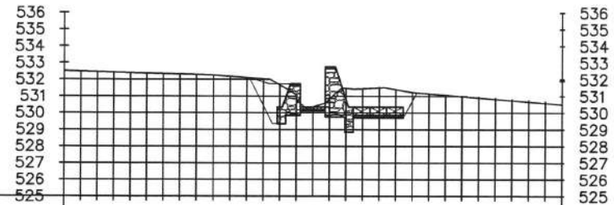

OFFSET	EXISTING BED ELEVATIONS	DESIGN BED
-15.00	532.50	
-14.00	532.53	
-13.00	532.56	
-12.00	532.59	
-11.00	532.61	
-10.00	532.64	
-9.00	532.67	
-8.00	532.70	
-7.00	532.73	
-6.00	532.75	
-5.00	532.78	
-4.00	532.81	
-3.00	532.77	
-2.00	532.04	
-1.00	531.06	
0	530.99	531.00
1.00	530.98	
2.00	531.61	
3.00	532.16	
4.00	532.79	
5.00	533.12	
6.00	533.11	
7.00	533.10	
8.00	533.09	
9.00	533.08	
10.00	533.08	
11.00	533.07	
12.00	533.06	
13.00	533.05	
14.00	533.05	
15.00	533.04	

LEGEND:-

Agriculture Area	
Orchard(Garden)	
Bench Mark	
Parental Canal	
Main Canal	
Branch Canal	
P-Turn Out	T O
Residential Area	
Road	
Existing Stone Masonry	
Proposed Stone Masonry	
Existing Culvert	
Proposed Culvert	
Tree	
River	
Residential Area	

River Cross Section

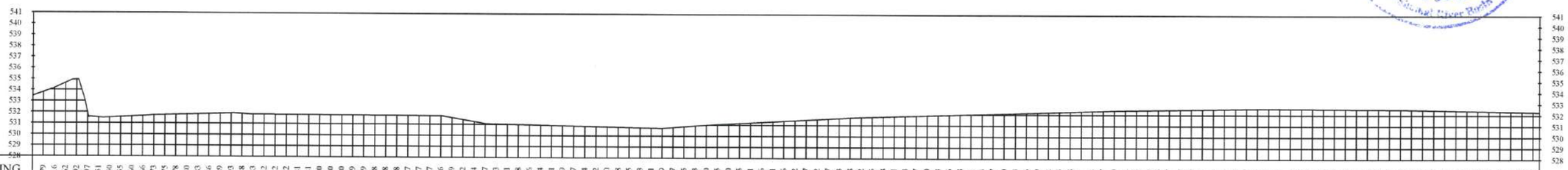

OFFSET	EXISTING ELEVATIONS
-87.00	533.79
-86.00	534.16
-85.00	534.62
-84.00	534.92
-83.00	531.97
-82.00	531.51
-81.00	531.50
-80.00	531.55
-79.00	531.60
-78.00	531.66
-77.00	531.73
-76.00	531.75
-75.00	531.78
-74.00	531.80
-73.00	531.83
-72.00	531.86
-71.00	531.89
-70.00	531.93
-69.00	531.88
-68.00	531.83
-67.00	531.82
-66.00	531.82
-65.00	531.82
-64.00	531.81
-63.00	531.81
-62.00	531.80
-61.00	531.80
-60.00	531.80
-59.00	531.79
-58.00	531.79
-57.00	531.78
-56.00	531.78
-55.00	531.78
-54.00	531.77
-53.00	531.77
-52.00	531.77
-51.00	531.76
-50.00	531.59
-49.00	531.42
-48.00	531.24
-47.00	531.07
-46.00	531.03
-45.00	531.01
-44.00	530.98
-43.00	530.96
-42.00	530.94
-41.00	530.91
-40.00	530.89
-39.00	530.87
-38.00	530.84
-37.00	530.82
-36.00	530.80
-35.00	530.78
-34.00	530.75
-33.00	530.73
-32.00	530.71
-31.00	530.69
-30.00	530.77
-29.00	530.85
-28.00	530.93
-27.00	531.00
-26.00	531.05
-25.00	531.10
-24.00	531.15
-23.00	531.21
-22.00	531.26
-21.00	531.31
-20.00	531.36
-19.00	531.42
-18.00	531.47
-17.00	531.52
-16.00	531.57
-15.00	531.63
-14.00	531.68
-13.00	531.72
-12.00	531.75
-11.00	531.78
-10.00	531.81
-9.00	531.84
-8.00	531.87
-7.00	531.90
-6.00	531.93
-5.00	531.96
-4.00	531.98
-3.00	532.01
-2.00	532.04
-1.00	532.07
0	532.10
1.00	532.13
2.00	532.16
3.00	532.19
4.00	532.22
5.00	532.25
6.00	532.28
7.00	532.31
8.00	532.34
9.00	532.37
10.00	532.40
11.00	532.42
12.00	532.43
13.00	532.44
14.00	532.46
15.00	532.47
16.00	532.49
17.00	532.50
18.00	532.51
19.00	532.53
20.00	532.54
21.00	532.56
22.00	532.57
23.00	532.59
24.00	532.59
25.00	532.58
26.00	532.58
27.00	532.57
28.00	532.57
29.00	532.56
30.00	532.55
31.00	532.54
32.00	532.54
33.00	532.54
34.00	532.53
35.00	532.53
36.00	532.52
37.00	532.50
38.00	532.49
39.00	532.47
40.00	532.45
41.00	532.43
42.00	532.41
43.00	532.39
44.00	532.37
45.00	532.36
46.00	532.34
47.00	532.32
48.00	532.30

USAID FROM THE AMERICAN PEOPLE	STRENGTHENING WATERSHED & IRRIGATION MANAGEMENT SWIM	CANAL NAME	LOCATION	DRAWING TITLE	SURVEYED BY	DRAWING AND DESIGN BY	REVIEWED AND CHECKED BY	SWIM APPROVAL	MEW/RBA APPROVAL	SHEET NO.
		BAGH PAHLAWAN MAIN CANAL	DISTRICT: SHOLGARA PROVINCE: BALKH	CROSS SECTIONS	SWIM	RAHIULLAH RAHMANI ENGINEER (HYDRAULIC SPECIALIST) DATE:	ENG. MOHAMMAD MOBIN OMID QA/QC & ENVIRONMENTAL COMPLIANCE DIRECTOR DATE:	Dr. AHMAD HASEEB PAYAB ACTING CHIEF OF PARTY DATE: 25 JUN 2019	DATE:	10 / 20

BAGH PALWAN PROPOSED AND EXISTING TURNOUT LIST

P/NO	STATION	TYPE	L(m)	NORTHING	EASTING	ELEVEATION
1	0+730	PROPOSED TURNOUT (JOY NAMINDA)-TO-01		36.42265	66.901770	530.36
2	1+345	PROPOSED TURNOUT-TO-02		36.42917	66.903290	527.28
3	1+500	PROPOSED TURNOUT JOY SEDIQ-TO-03		36.42799	66.902980	527.11
4	1+870	PROPOSED TURNOUT-TO-04		36.43235	66.903580	525.77
5	2+095	EXISTING UPGRADED TURNOUT-E-TO-1		36.4352	66.904210	525.7
6	2+510	EXISTING TURNOUT-TO-02		36.43758	66.905760	524.17
7	2+550	EXISTING TURNOUT-TO-03		36.43784	66.905720	524.07
8	2+835	PROPOSED TURNOUT-TO-05		36.43801	66.905660	523.38
9	2+880	EXISTING TURNOUT-TO-04		36.43895	66.906160	523.13
10	3+020	PROPOSED TURNOUT-TO-06		36.43958	66.907540	522.45
11	3+610	PROPOSED TURNOUT-TO-07		36.44327	66.910220	516.62
12	3+670	PROPOSED TURNOUT-TO-08		36.44378	66.910390	516.57
13	3+820	PROPOSED TURNOUT-TO-09		36.44428	66.910180	516.1
14	3+880	PROPOSED TURNOUT-TO-10		36.44561	66.910500	516.05
15	3+910	PROPOSED TURNOUT-TO-11		36.44657	66.910470	516
16	4+020	PROPOSED TURNOUT-TO-12		36.44761	66.910500	515.54

BAGH PALWAN PROPOSED AND EXISTING SPILLWAY LIST

P/NO	STATION	TYPE	L(m)	NORTHING	EASTING	ELEVEATION
1	4+220	EXISTING SPILLWAY-E-S-01		36.44887	66.910130	514.98

BAGH PALWAN PROPOSED AND EXISTING CULVERT LIST

P/NO	STATION	TYPE	L(m)	NORTHING	EASTING	ELEVEATION
1	1+100	EXISTING CULVERT-C-1	3	36.4258	66.926200	527.51
2	2+320	EXISTING CULVERT-E-C-02	3	36.43599	66.904900	524.71
3	3+120	EXISTING CULVERT-E-C-01	3	36.44171	66.909090	522..36
4	3+850	PROPOSED CULVERT-C-P-01	4	36.4478	66.909960	516.85

BAGH PALWAN PROPOSED AND EXISTING SIDE INTAKE LIST

P/NO	STATION	TYPE	L(m)	NORTHING	EASTING	ELEVEATION
1	0+000	PROPOSED SIDE INTAKE STONE MASSONARY LINING BOTH SIDES	250	36.41631	66.901350	531.50

BAGH PALWAN PROPOSED AND EXISTING PROTECTION LIST

P/NO	STATION	TYPE	L(m)	NORTHING	EASTING	ELEVEATION
1	0+000	PROPOSED PROTECTION WALL	400	36.4857	66.902050	531.3

BAGH PALWAN EXISTING RETAINING WALL WITH 470 METER PROPOSED GABION APRON

P/NO	STATION	TYPE	L(m)	NORTHING	EASTING	ELEVEATION
1	RV 0+00 TO RV 0+470	PROPOSED GABION APRON	470	36.49	66.900000	531.5

USAID FROM THE AMERICAN PEOPLE	STRENGTHENING WATERSHED & IRRIGATION MANAGEMENT SWIM	CANAL NAME	LOCATION	DRAWING TITLE	SURVEYED BY	DRAWING AND DESIGN BY	REVIEWED AND CHECKED BY	SWIM APPROVAL	MEW/RBA APPROVAL	SHEET NO. 11 /20
		BAGH PAHLAWAN MAIN CANAL	DISTRICT: SHOLGARA PROVINCE: BALKH	STRUCTURE LIST ALONG WITH GPS COORDINATES	SWIM	RAFIULLAH RAHMANI ENGINEER (HYDRAULIC SPECIALIST) DATE:	ENG. MOHAMMAD MOBIN OMID QA/QC & ENVIRONMENTAL COMPLIANCE DIRECTOR DATE:	DR. AHMAD HASEEB PAYAB ACTING CHIEF OF PARTY DATE: 25 JUN 2012	DATE:	

Note:

1: Unless noted otherwise, linear dimensions shown on drawing are in centimeters (cm), and elevations are in meters (m).
2: Excavation for the Foundation should be checked by the site Engineer
3: Sand and Gravel should be clean and free from organic material
4: All filling should be compacted properly in layers of 15cm each
5: Stone masonry should be done by mortar (1:4)
6: Mild steel Grad 60 rebar to be used.
7: Fresh cement to be used
8: Clean water should be used (suitable for drinking)
9: Angle and length of wing walls to be adjusted by SWIM engineer as per site conditions.
10: Gravel: Material passing a 75-mm (3-inch) sieve and retained on a 4.75-mm (No.4) sieve.
11: Coarse Sand: Material passing a 4.75-mm sieve (No. 4) and retained on a 2.00-mm (No.10) sieve.
12: Fine Sand: Material passing a 0.475-mm (No. 40) sieve and retained on a 0.075-mm (No. 200) sieve.

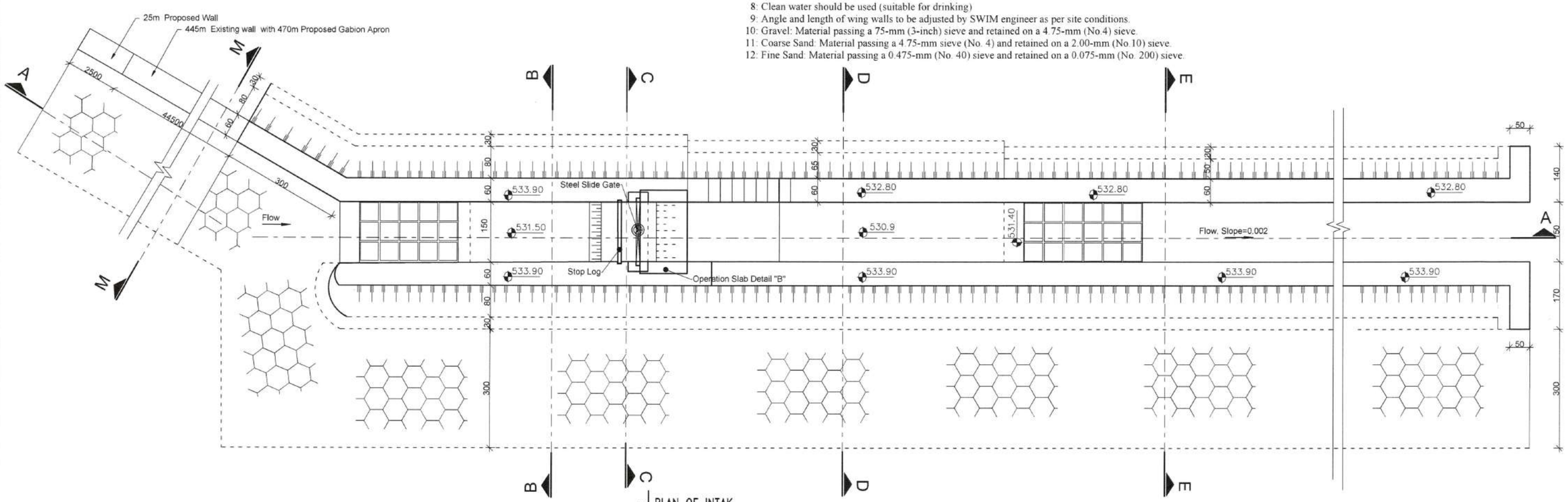

PLAN OF INTAK

REF. SCALE: 1:100

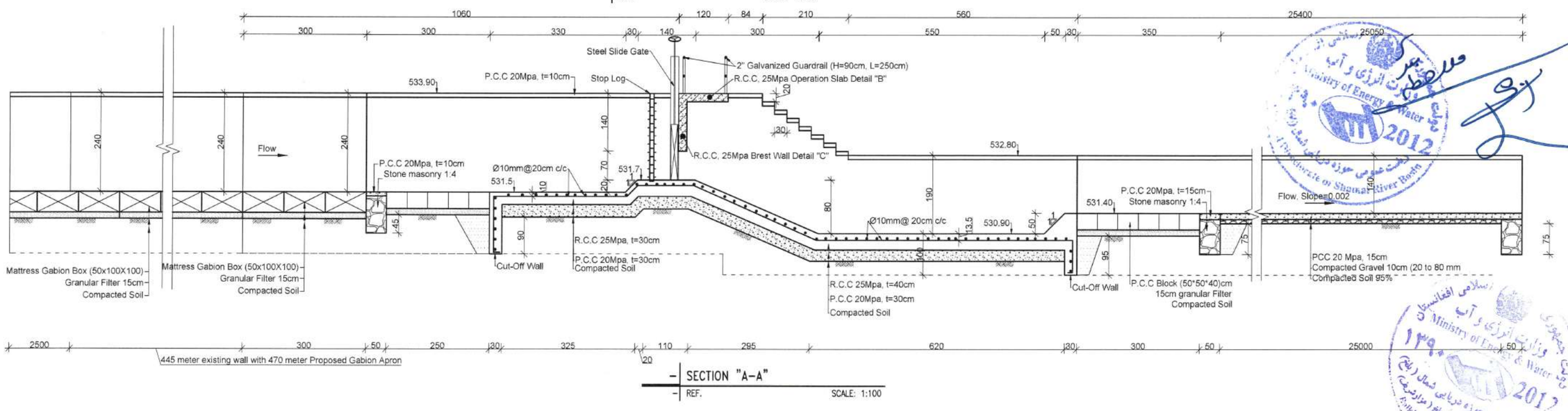

SECTION "A-A"

REF. SCALE: 1:100

	STRENGTHENING WATERSHED & IRRIGATION MANAGEMENT	CANAL NAME	LOCATION	DRAWING TITLE	SURVEYED BY	DRAWING AND DESIGN BY	REVIEWED AND CHECKED BY	SWIM APPROVAL	MEW/RBA APPROVAL	
USAID FROM THE AMERICAN PEOPLE	SWIM	BAGH PAHLAWAN MAIN CANAL	DISTRICT: SHOLGARA PROVINCE: BALKH	INTAKE STRUCTURE PLAN AND SECTIONS	SWIM	RAFIULLAH RAHMANI ENGINEER (HYDRAULIC SPECIALIST)	ENG. MOHAMMAD MOBIN OMID QA/QC & ENVIRONMENTAL COMPLIANCE DIRECTOR	DR. AHMAD HASEEB PAYAB ACTING CHIEF OF PARTY		SHEET NO. 12/20
						DATE	DATE	DATE	DATE	

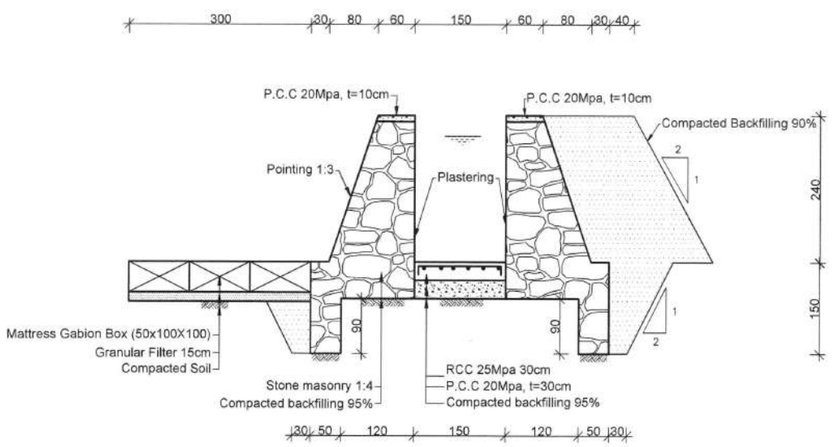

SECTION "B-B"

REF. SCALE: 1:100

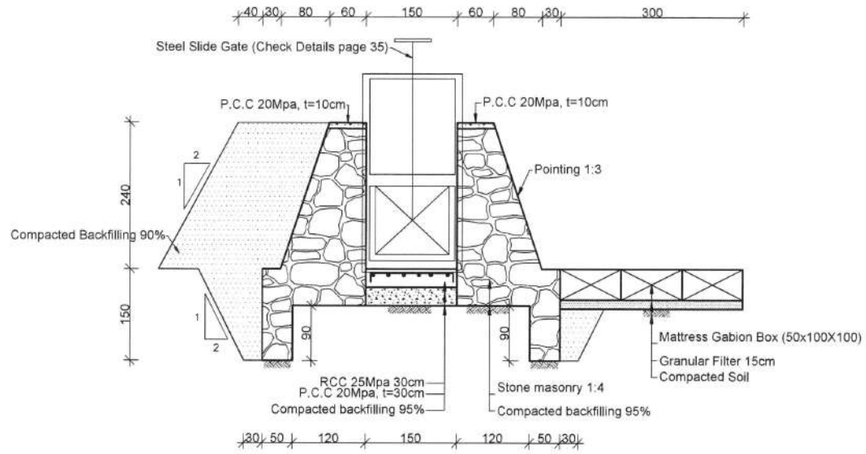

SECTION "C-C"

REF. SCALE: 1:100

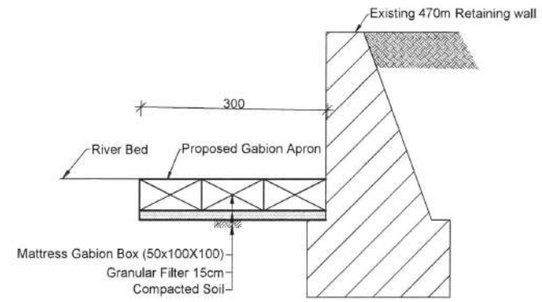

SECTION "M-M" PROPOSED 470M GABION APRON

REF. SCALE: 1:100

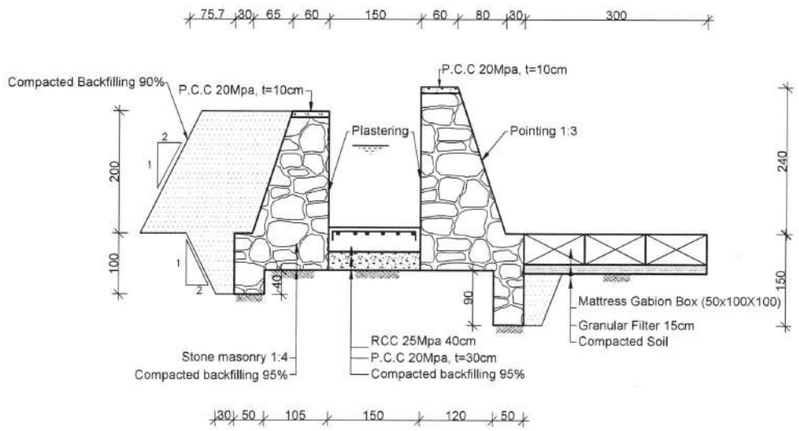

SECTION "D-D"

REF. SCALE: 1:100

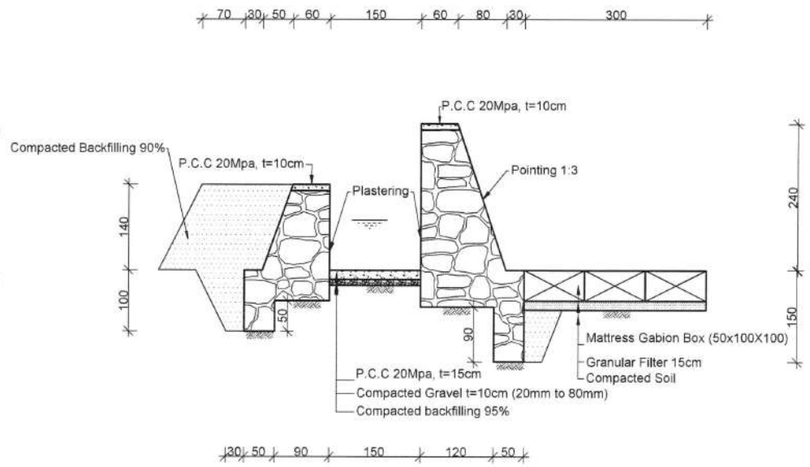

SECTION "E-E"

REF. SCALE: 1:100

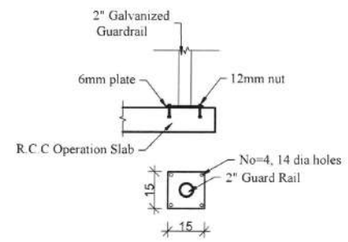

Detail of Guard Rail Bearing in Operation Slab of Intake

REF. SCALE: 1:25

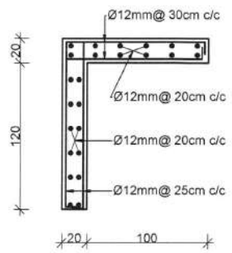

Detail "B" and Detail "C"

REF. SCALE: 1:50

USAID FROM THE AMERICAN PEOPLE	STRENGTHENING WATERSHED & IRRIGATION MANAGEMENT SWIM	CANAL NAME	LOCATION	DRAWING TITLE	SURVEYED BY	DRAWING AND DESIGN BY	REVIEWED AND CHECKED BY	SWIM APPROVAL	MEW/RBA APPROVAL	SHEET NO. 13/20
		BAGH PAHLAWAN MAIN CANAL	DISTRICT: SHOLGARA PROVINCE: BALKH	INTAKE AND LININING SECTIONS & DETAILS	SWIM	RAFIULLAH RAHMANI ENGINEER (HYDRAULIC SPECIALIST) DATE:	ENG. MOHAMMAD MOBIN OMID QA/QC & ENVIRONMENTAL COMPLIANCE DIRECTOR DATE:	DR. AHMAD HASEEB PAYAB ACTING CHIEF OF PARTY DATE:	DATE:	

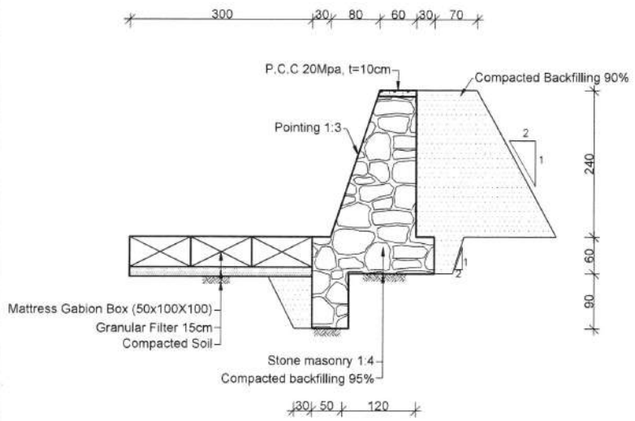

PROTECTION WALL L= 400 METER

REF. SCALE: 1:100

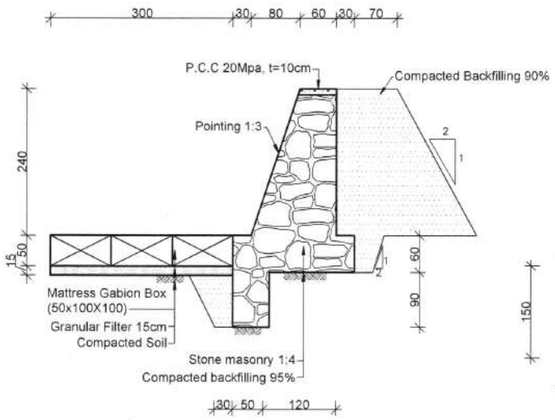

RETAINING WALL LENGHT=5 METER

REF. BLOCKING THE EXISTING INTAKE SCALE: 1:100

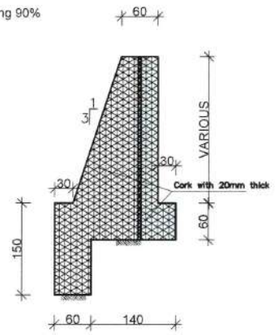

SECTION "B-B"

REF. EXPENTION JOINT SCALE: 1:100

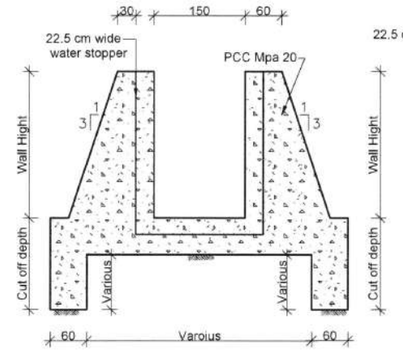

SECTION A-A

REF. SCALE: 1:100

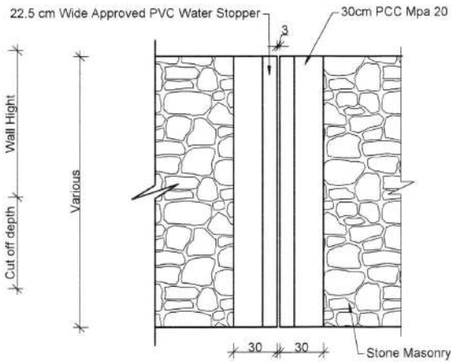

SECTION "C-C"

REF. Construction joint SCALE: 1:50

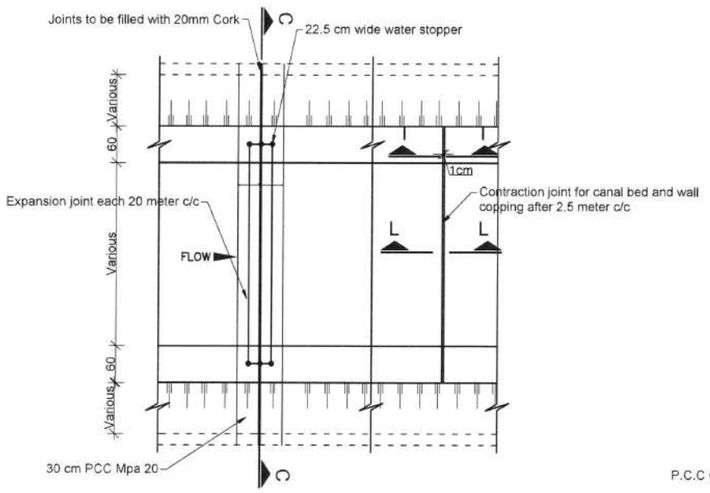

PLAN OF EXPANSION JOINT FOR CANAL SECTION

REF. BLOCKING THE EXISTING INTAKE SCALE: 1:100

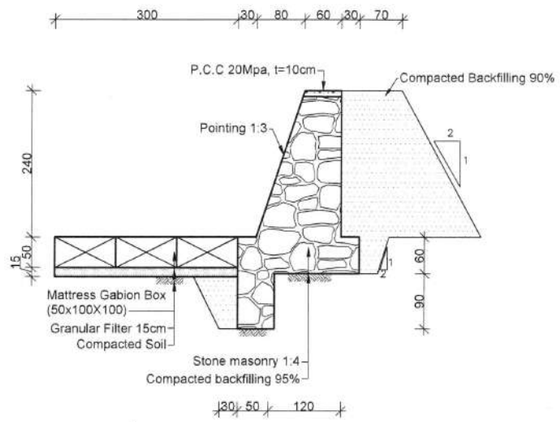

RETAINING WALL LENGHT=25 METER

REF. AT START OF EXISTING WALL SCALE: 1:100

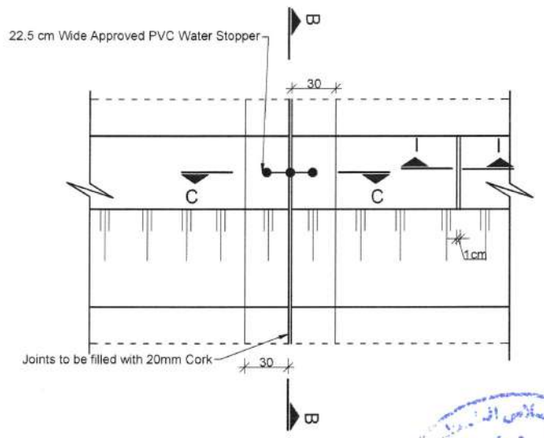

PLAN OF EXPENSION JOINT FOR RETAINING WALL @15M C/C

REF. Construction joint SCALE: 1:50

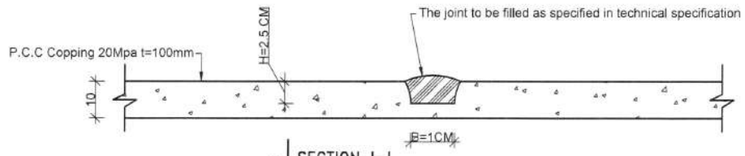

SECTION I-I

REF. SCALE: 1:50

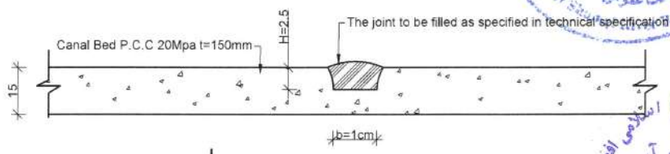

SECTION L-L

REF. SCALE: 1:50

USAID FROM THE AMERICAN PEOPLE	STRENGTHENING WATERSHED & IRRIGATION MANAGEMENT SWIM	CANAL NAME	LOCATION	DRAWING TITLE	SURVEYED BY	DRAWING AND DESIGN BY	REVIEWED AND CHECKED BY	SWIM APPROVAL	MEW/RBA APPROVAL	SHEET NO.
		BAGH PAHLAWAN MAIN CANAL	DISTRICT: SHOLGARA PROVINCE: BALKH	PROTECTION WALLS, SECTIONS AND DETAILS	SWIM	RAFIULLAH RAHMANI ENGINEER (HYDRAULIC SPECIALIST)	ENG. MOHAMMAD MOBIN OMID QA/QC & ENVIRONMENTAL COMPLIANCE DIRECTOR	DR. AHMAD HASEEB PAYAB ACTING CHIEF OF PARTY		14/20
						DATE:	DATE:	DATE: 25 Nov 2010	DATE:	

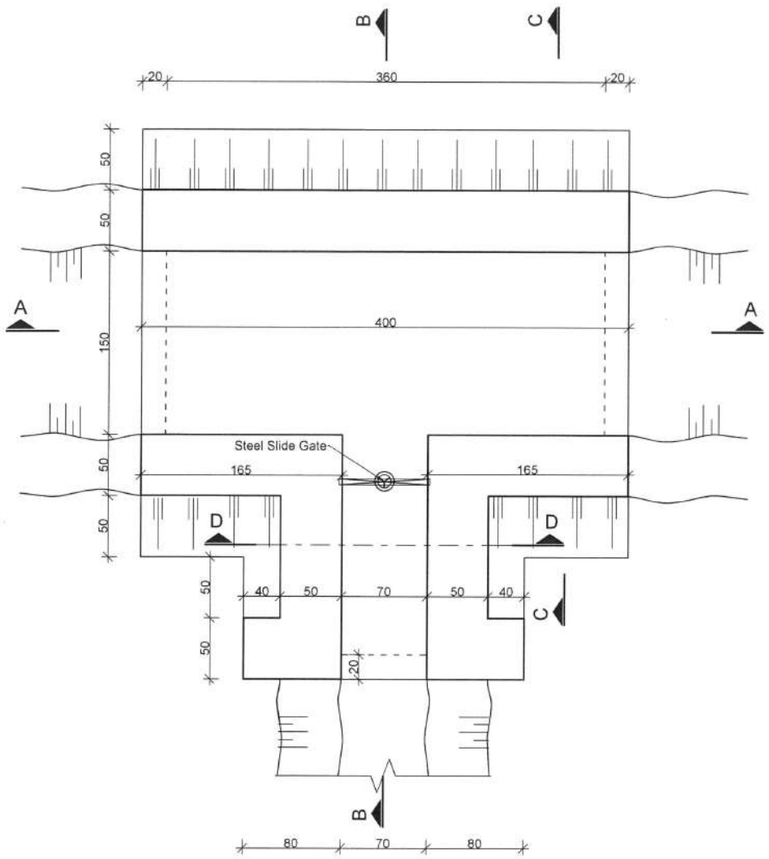

Plan of Turnout

REF. SCALE: 1:50

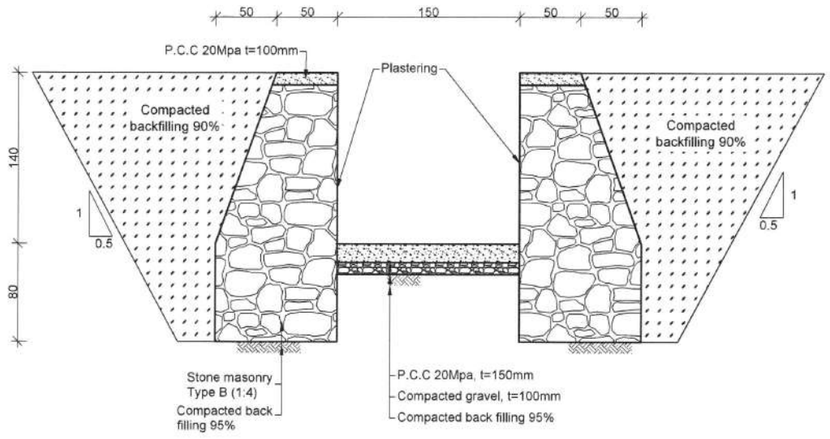

SECTION "C-C"

REF. SCALE: 1:50

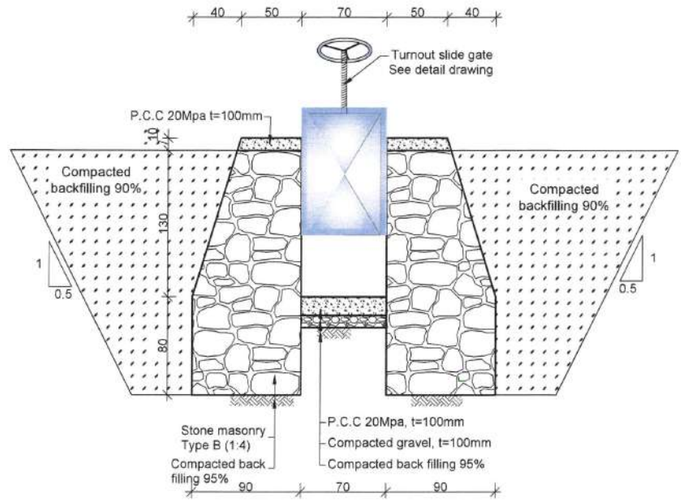

SECTION "D-D"

REF. SCALE: 1:50

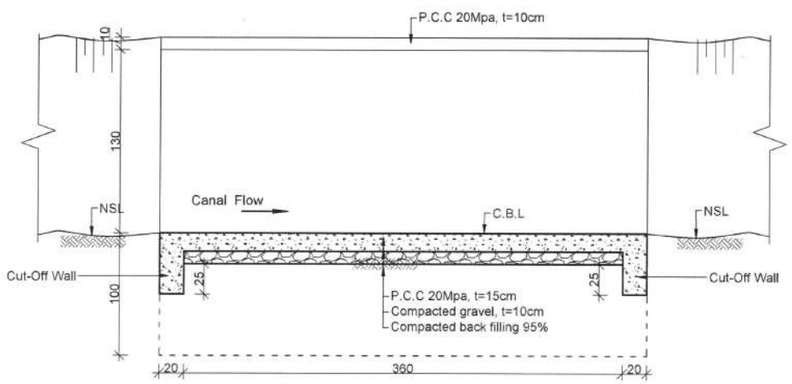

SECTION"A-A"

REF. SCALE: 1:50

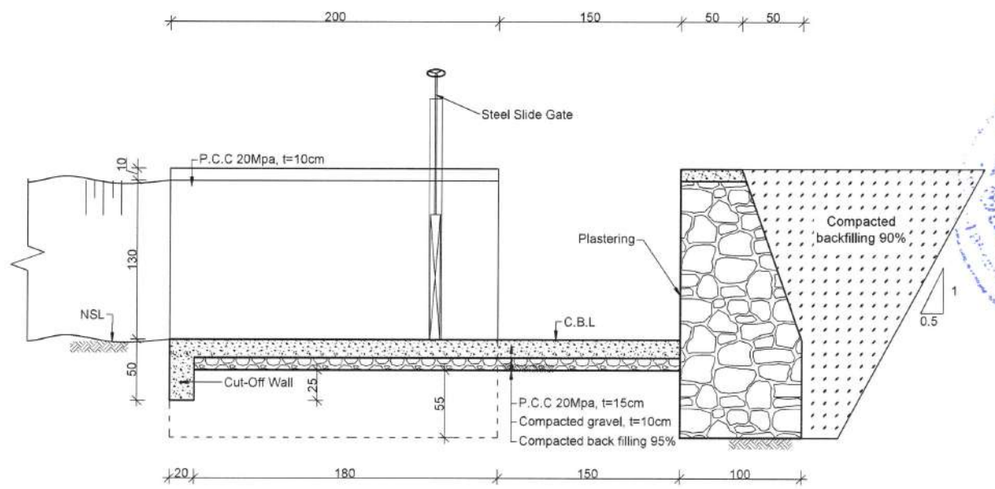

SECTION "B-B"

REF. SCALE: 1:50

USAID FROM THE AMERICAN PEOPLE	STRENGTHENING WATERSHED & IRRIGATION MANAGEMENT SWIM	CANAL NAME	LOCATION	DRAWING TITLE	SURVEYED BY	DRAWING AND DESIGN BY	REVIEWED AND CHECKED BY	SWIM APPROVAL	MEW/RBA APPROVAL	SHEET NO. 15/20
		BAGH PAHLAWAN MAIN CANAL	DISTRICT: SHOLGARA PROVINCE: BALKH	TURN OUT STRUCTURE SECTIONS AND DETAILS	SWIM	RAFIULLAH RAHMANI ENGINEER (HYDRAULIC SPECIALIST) DATE	ENG. MOHAMMAD MOBIN OMID QA/QC & ENVIRONMENTAL COMPLIANCE DIRECTOR DATE	DR. AHMAD HASEEB PAYAB ACTING CHIEF OF PARTY DATE 25 JUN 2013	DATE	

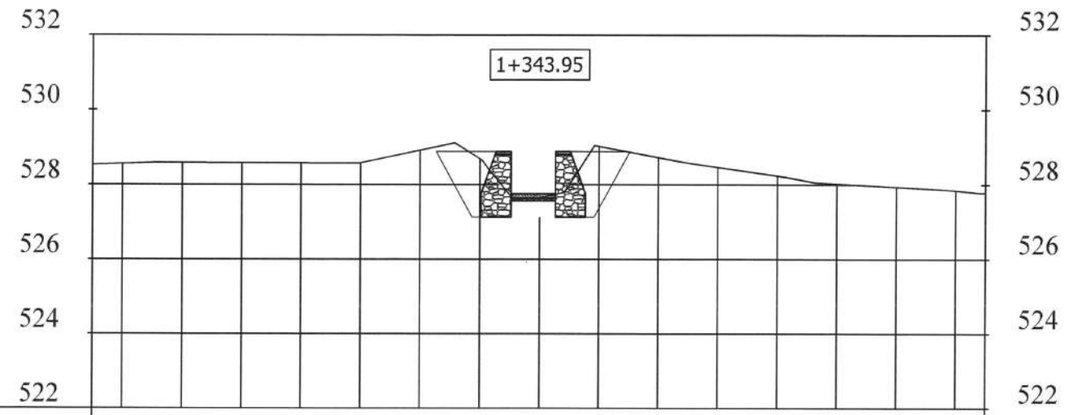

EXISTING ELEVATIONS	528.56	528.59	528.58	528.58	528.58	528.92	528.69	527.11	529.02	528.73	528.46	528.24	528.02	527.94	527.85
OFFSET	-14.00	-12.00	-10.00	-8.00	-6.00	-4.00	-2.00	0	2.00	4.00	6.00	8.00	10.00	12.00	14.00

Filling Area= 6 sqm

Cutting Area=8.5sqm

BAGH PAHLAWAN MAIN CANAL AVERAGE CUTTING AND FILLING FOR TURNOUT STRUCTURES

USAID FROM THE AMERICAN PEOPLE	STRENGTHENING WATERSHED & IRRIGATION MANAGEMENT SWIM	CANAL NAME	LOCATION	DRAWING TITLE	SURVEYED BY	DRAWING AND DESIGN BY	REVIEWED AND CHECKED BY	SWIM APPROVAL	MEW/RBA APPROVAL	SHEET NO.
		BAGH PAHLAWAN MAIN CANAL	DISTRICT: SHOLGARA PROVINCE: BALKH	PROTECTION WALLS, SECTIONS AND DETAILS	SWIM	RAFIULLAH RAHMANI ENGINEER (HYDRAULIC SPECIALIST) DATE:	ENG. MOHAMMAD MOBIN OMID QA/QC & ENVIRONMENTAL COMPLIANCE DIRECTOR DATE:	DR. AHMAD HASEEB PAYAB ACTING CHIEF OF PARTY DATE: 25 JUN 2013	DATE:	16/20

TABLE-#

No	Station	Culvert Detail	Dimensions (M)			GPS Coordinate		Bed Elevation	Remarks
			Length	Height	Width	North	East		
1	3+850	Deck Slab Culvert	4	2.0	2.0	36.4478	66.9099	516.85	

Note:

1: All dimension are in centimeter
2: Excavation for the Foundation should be checked by the site Engineer, so as to have a hard bed and not less than 1 M
3: Sand and Gravel should be clean and free from organic material
4: Compressive strength of plain cement concrete 20MPa(1:1.5:3)
5: Compressive strength of Reinforced cement concrete 25MPa(1:1:2)
6: Mild steel Grad 60 rebar to be used.
7: All inside and out side filling should be compacted properly in layers of 15cm each
8: Stone masonry should be done by Type B (1:4)
9: Fresh cement to be used
10: Clean water should be used(suitable for drinking)
11: Angle and length of wing walls to be adjusted by SWIM engineer as per site conditions

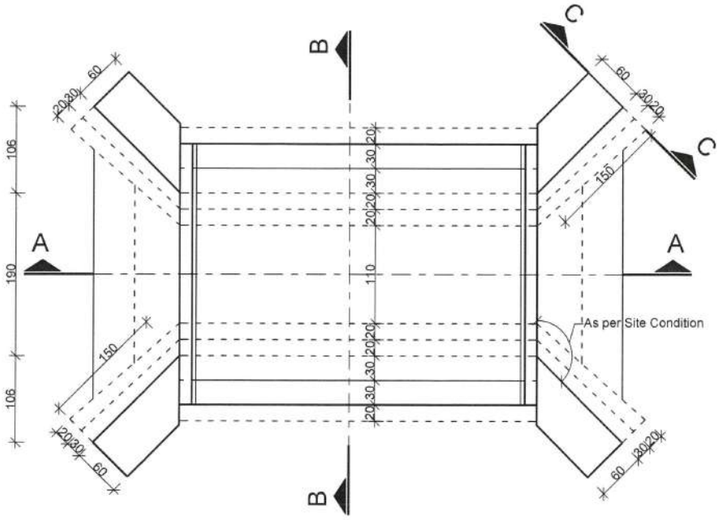

Plan of Slab Culvert
REF. SCALE: 1:75

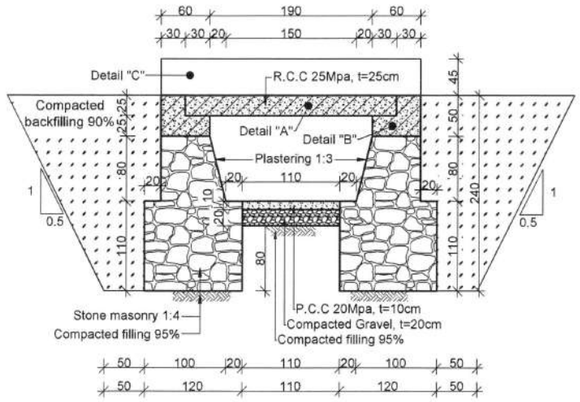

Section "B-B"
REF. SCALE: 1:75

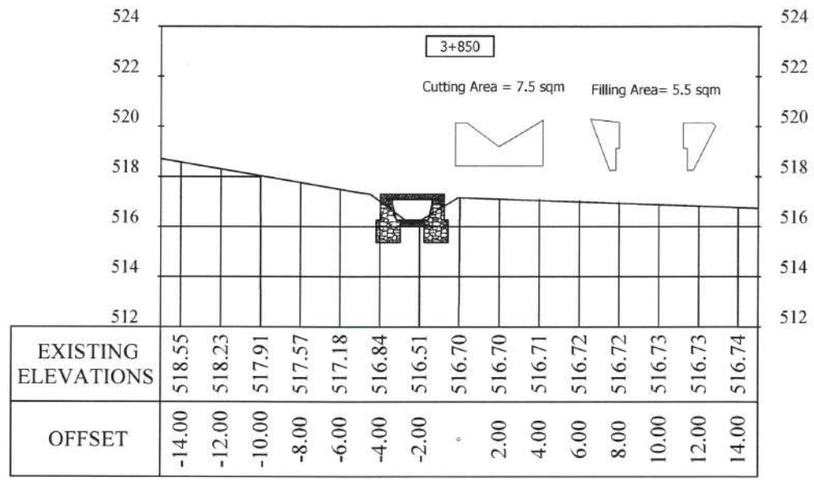

EXISTING ELEVATIONS	518.55	518.23	517.91	517.57	517.18	516.84	516.51	516.70	516.70	516.71	516.72	516.72	516.73	516.73	516.74
OFFSET	-14.00	-12.00	-10.00	-8.00	-6.00	-4.00	-2.00	0	2.00	4.00	6.00	8.00	10.00	12.00	14.00

Bar Schedule (No. of bars and total bar length presented for 1m culvert)

Member	Bar Diameter	Shape Code	No. of Bars	Segment length (mm)					Total length - *varies* (metres)
				a	b	c	d	e	
Deck	18	a b a	7	150	2400				18.10
Deck	18	a b a	7	150	2400				18.10
Deck	12	a	4	4300					17.20
Deck	12	a	4	4300					17.20
Bearing Shelf	12	c b e d	10		340	240	328	216	9.340
Bearing Shelf	12	d c e b	10		540	90	516	66	12.12
Bearing Shelf	12	a	13	1000					13.000
Parapet Wall	8	a	13	1000					13.000
Parapet wall	12	e b a d c	16	600	400	200	140	100	23.04

Note: No. of bars and total bar length Should be calculate as per required length

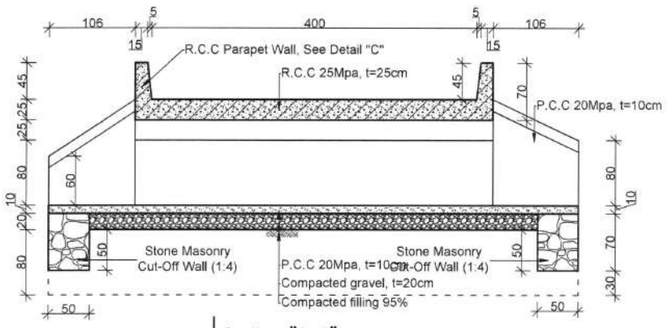

Section "A-A"
REF. SCALE: 1:75

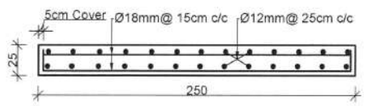

Detail "A"
REF. SCALE: 1:50

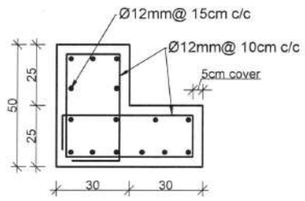

Detail "B"
REF. SCALE: 1:25

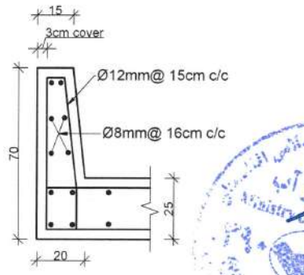

Detail "C"
REF. SCALE: 1:25

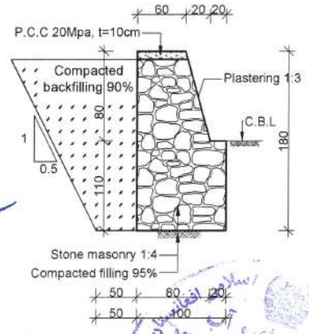

Section "C-C"
REF. SCALE: 1:75

USAID FROM THE AMERICAN PEOPLE	STRENGTHENING WATERSHED & IRRIGATION MANAGEMENT SWIM	CANAL NAME	LOCATION	DRAWING TITLE	SURVEYED BY	DRAWING AND DESIGN BY	REVIEWED AND CHECKED BY	SWIM APPROVAL	MEW/RBA APPROVAL	
		BAGH PAHLWAN MAIN CANAL	DISTRICT: SHOLGARA PROVINCE: BALKH	DECK SLAB CULVERT PLAN, SECTIONS & DETAILS	SWIM	RAFIULLAH RAHMANI ENGINEER (HYDRAULIC SPECIALIST) DATE:	ENG. MOHAMMAD MOBIN OMID QA/QC & ENVIRONMENTAL COMPLIANCE DIRECTOR DATE:	DR. AHMAD HASEEB PAYAB ACTING CHIEF OF PARTY DATE: 25 JUN 2017	DATE:	SHEET NO. 17/20

Steel Slide Gate Detail, Size (170*320)cm For Intake

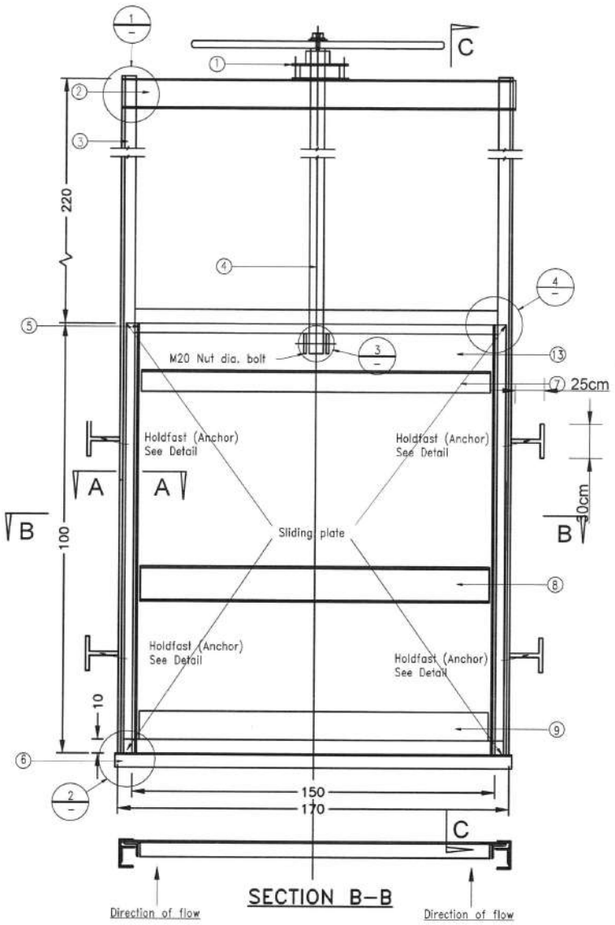

SECTION B–B

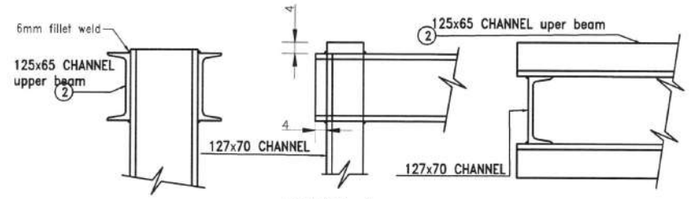

DETAIL 1:
FRAME CROSS BEAM(TOP)

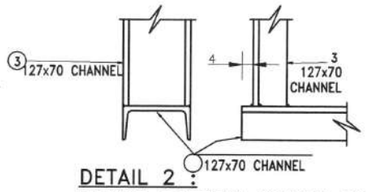

DETAIL 2 :
FRAME BOTTOM CROSS BEAM

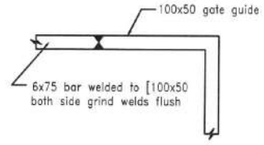

DETAIL 4:
HORIZONTAL BAR

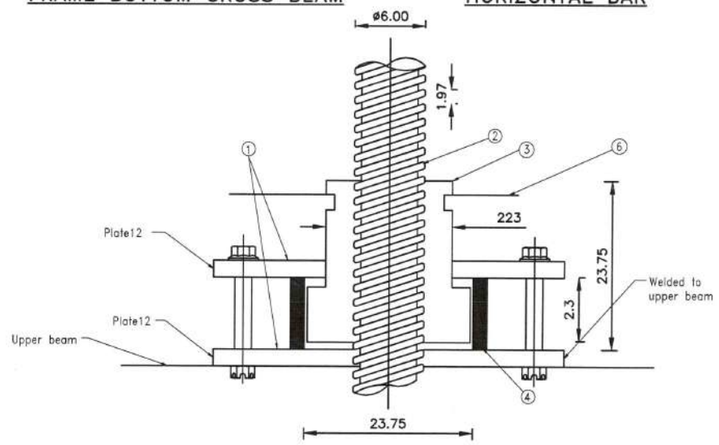

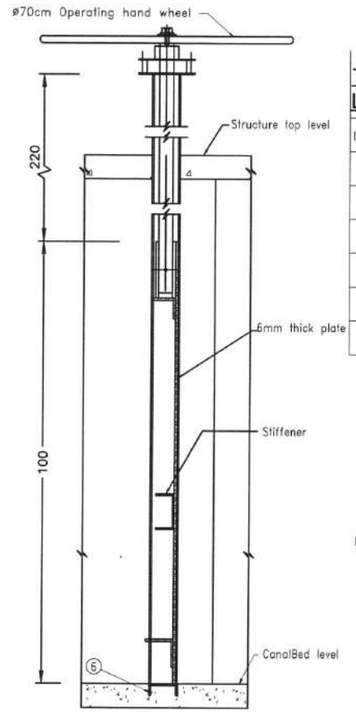

SECTION C–C

TABLE (2)
LIFTING COMPONENT

Item	Description
1	Upper&lower plate 250x250x12mm
2	Spindle
3	Bearing nut
4	Spacer
5	Four M12 bolts , nuts
6	ø700mm handle

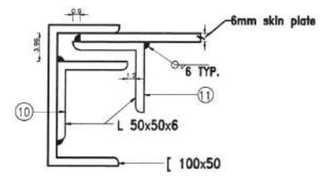

SECTION A–A

NOTE:

1.Three coats of enamel paint (one coat of red–oxide+ two coat of enamel paint).
2. Operation of the gates to be done by Mirab as per their scheduling.

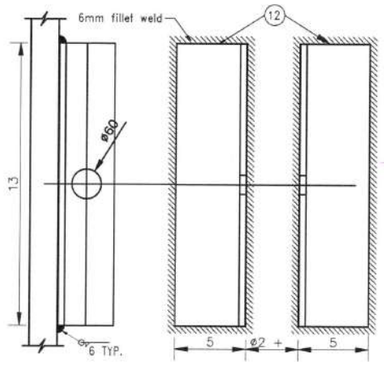

SECTION ELEVATION

DETAIL 3:
LIFTING BRACKETS

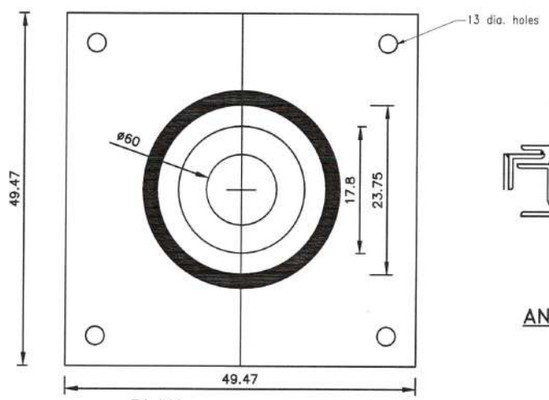

PLAN
THRUST BEARING

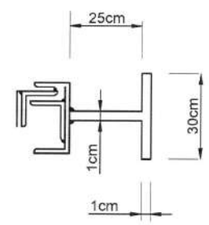

ANCHOR DETAIL

TABLE(1)
GATE COMPONENT

Item	Description
1	Thrust bearing/nut assembly
2	[125 x 65 Channel Upper beam
3	[127 x 70 Channel
4	Spindle ø 60mm
5	6 x 75 bar
6	[100 x 50 Channel (Lower beam)
7	Stiffener L 75x75x6
8	Stiffener [100x65
9	Stiffener L 100x100x6
10	L 50x 50x 6aNSLe
11	L 50x 50x 6aNSLe
12	L 50 X 50 X 6 lifting brackets
13	Plate 6 mm (see notes)

USAID FROM THE AMERICAN PEOPLE	STRENGTHENING WATERSHED & IRRIGATION MANAGEMENT SWIM	CANAL NAME	LOCATION	DRAWING TITLE	SURVEYED BY	DRAWING AND DESIGN BY	REVIEWED AND CHECKED BY	SWIM APPROVAL	MEW/RBA APPROVAL	SHEET NO.
		BAGH PAHLAWAN MAIN CANAL	DISTRICT: SHOLGARA PROVINCE: BALKH	INTAKE STRUCTURE STEEL SLIDE GATE	SWIM	RAFIULLAH RAHMAD ENGINEER (HYDRAULIC SPECIALIST) DATE:	ENG. MOHAMMAD MOBIN OMID QA/QC & ENVIRONMENTAL COMPLIANCE DIRECTOR DATE:	DR. AHMAD HASEEB PAYAB ACTING CHIEF OF PARTY DATE: 25 JUN 2019	DATE:	18/20

Steel Slide Gate Detail, Size (80x180) cm
For Turnouts Control in Branches

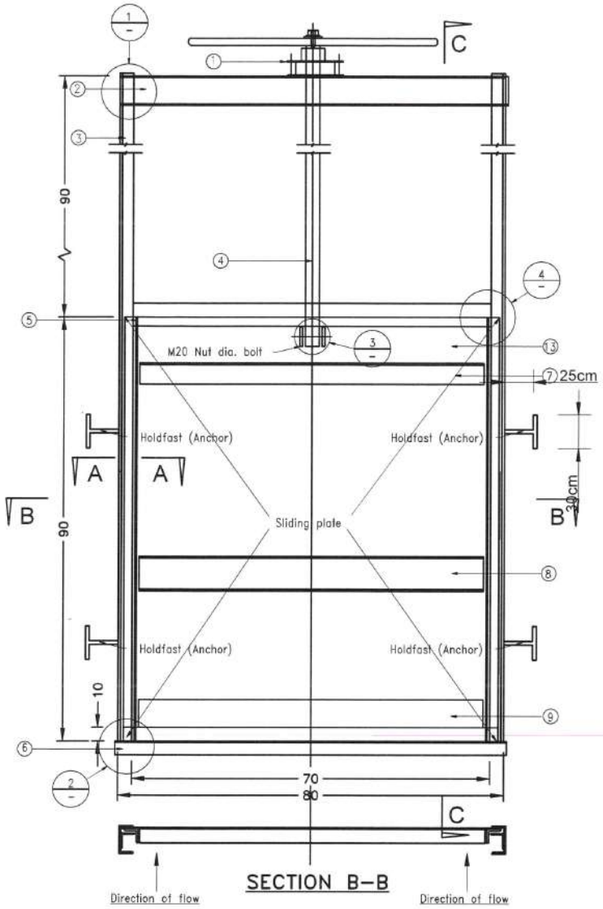

SECTION B–B

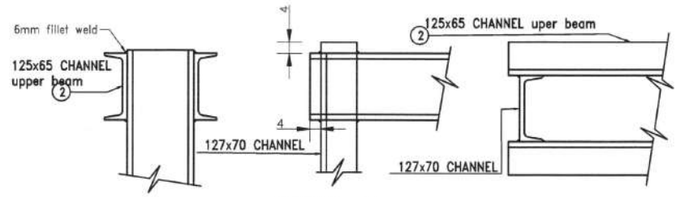

DETAIL 1:
FRAME CROSS BEAM(TOP)

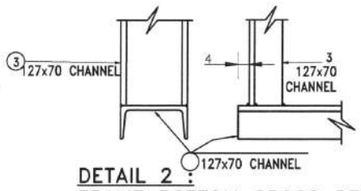

DETAIL 2 :
FRAME BOTTOM CROSS BEAM

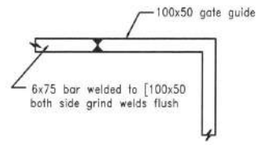

DETAIL 4:
HORIZONTAL BAR

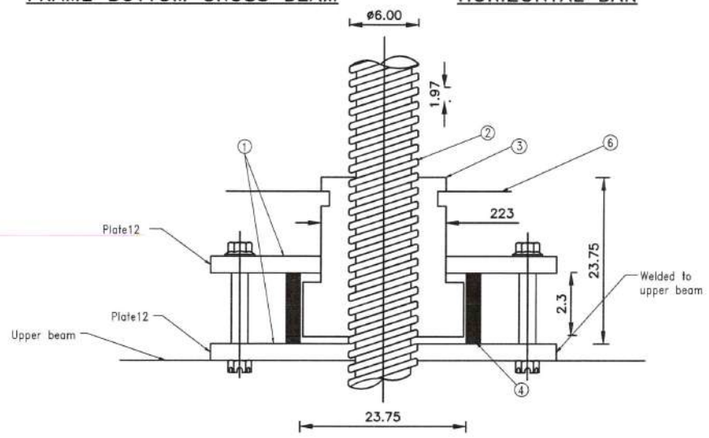

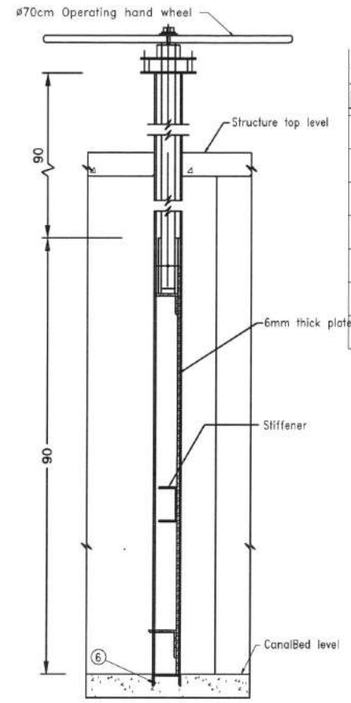

SECTION C–C

TABLE (2)
LIFTING COMPONENT

Item	Description
1	Upper&lower plate 250x250x12mm
2	Spindle
3	Bearing nut
4	Spacer
5	Four M12 bolts , nuts
6	ø700mm handle

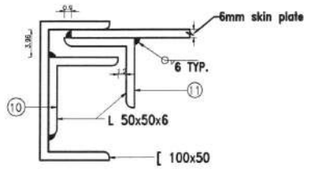

SECTION A–A

NOTE:

1.Three coats of enamel paint (one coat of red–oxide+ two coat of enamel paint).
2. Operation of the gates to be done by Mirab as per their scheduling.

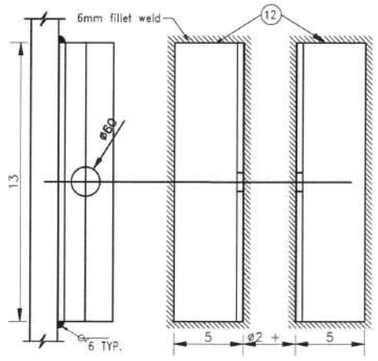

SECTION ELEVATION

DETAIL 3:
LIFTING BRACKETS

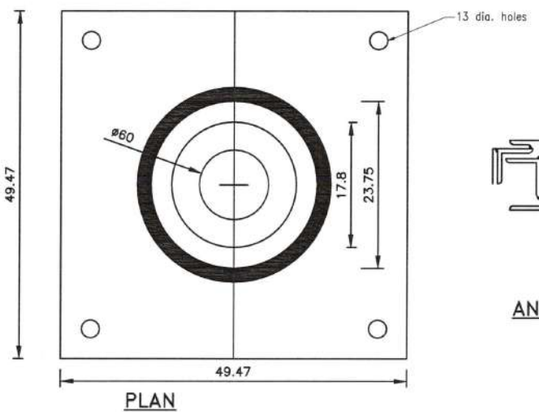

PLAN
THRUST BEARING

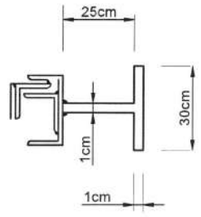

ANCHOR DETAIL

TABLE(1)
GATE COMPONENT

Item	Description
1	Thrust bearing/nut assembly
2	[125 x 65 Channel Upper beam
3	[127 x 70 Channel
4	Spindle ø 60mm
5	6 x 75 bar
6	[100 x 50 Channel (Lower beam)
7	Stiffener L 75x75x6
8	Stiffener [100x65
9	Stiffener L 100x100x6
10	L 50x 50x 6aNSLe
11	L 50x 50x 6aNSLe
12	L 50 X 50 X 6 lifting brackets
13	Plate 6 mm (see notes)

	STRENGTHENING WATERSHED & IRRIGATION MANAGEMENT	CANAL NAME	LOCATION	DRAWING TITLE	SURVEYED BY	DRAWING AND DESIGN BY	REVIEWED AND CHECKED BY	SWIM APPROVAL	MEW&RA APPROVAL	
USAID FROM THE AMERICAN PEOPLE	SWIM	BAGH PAHLAWAN MAIN CANAL	DISTRICT: SHOLGARA PROVINCE: BALKH	TURNOUT STRUCTURE STEEL SLIDE GATE	SWIM	RAFIULLAH RAHMANI ENGINEER (HYDRAULIC SPECIALIST)	ENG. MOHAMMAD MOBIN OMID QA/QC & ENVIRONMENTAL COMPLIANCE DIRECTOR	DR. AHMAD HASEEB PAYAB ACTING CHIEF OF PARTY		SHEET NO. 19/20
						DATE:	DATE:	DATE: 25 JUN 2013	DATE:	

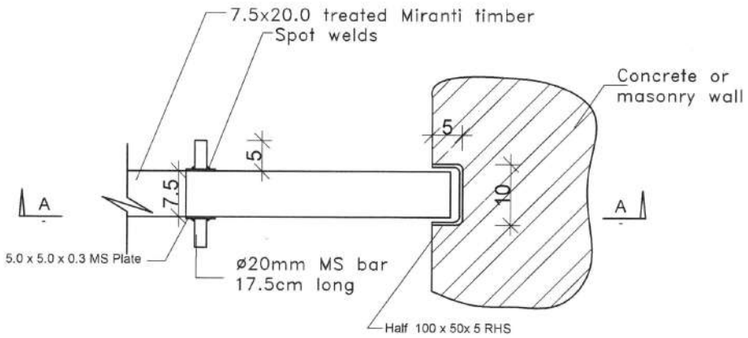

PLAN

Scale: 1: 1

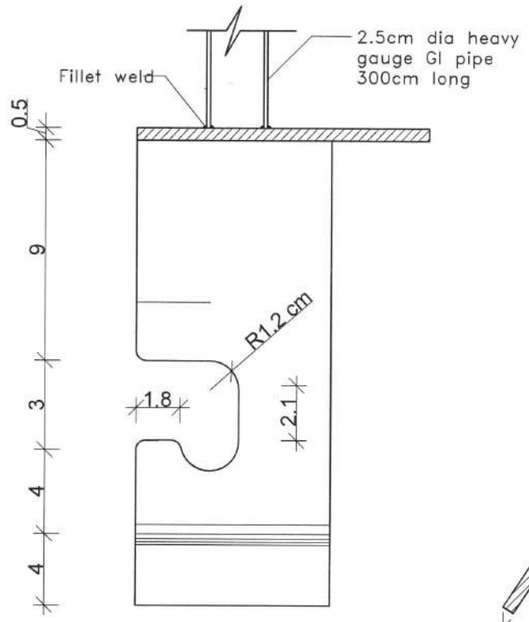

SECTION B-B

Scale: 1: 2.5

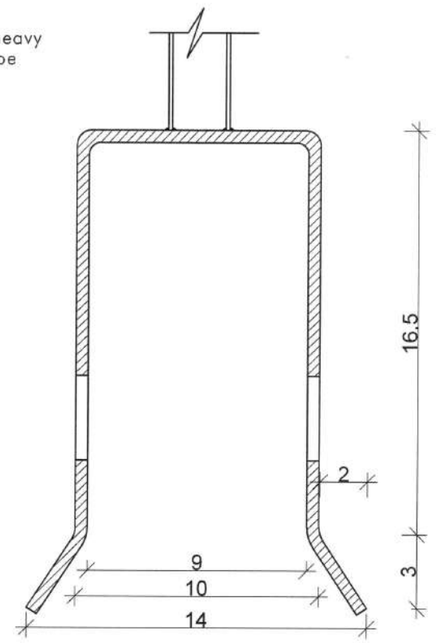

SECTION C-C

Scale: 1: 2.5

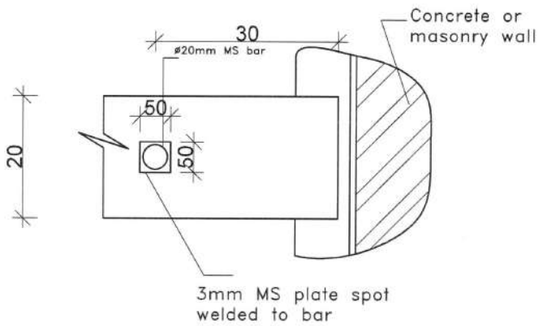

SECTION A-A

Scale: 1: 1

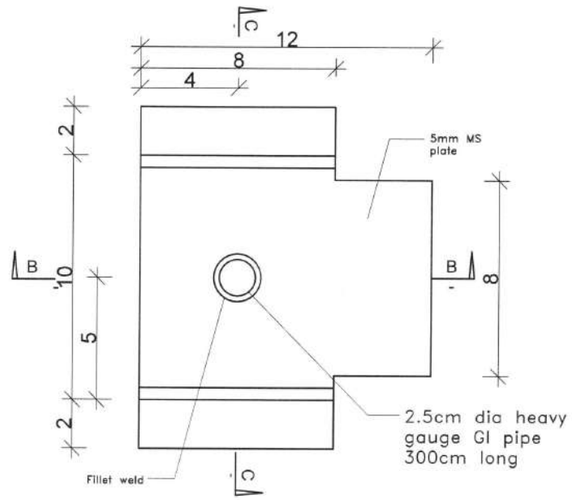

PLAN

Scale: 1: 2.5

USAID FROM THE AMERICAN PEOPLE	STRENGTHENING WATERSHED & IRRIGATION MANAGEMENT SWIM	CANAL NAME	LOCATION	DRAWING TITLE	SURVEYED BY	DRAWING AND DESIGN BY	REVIEWED AND CHECKED BY	SWIM APPROVAL	MEW&RBA APPROVAL	
		BAGH PAHLAWAN MAIN CANAL	DISTRICT: SHOLGARA PROVINCE: BALKH	STOP LOG	SWIM	RAFIULLAH RAHMANI ENGINEER (HYDRAULIC SPECIALIST)	ENG. MOHAMMAD MOBIN OMID QA/QC & ENVIRONMENTAL COMPLIANCE DIRECTOR	DR. AHMAD HASEEB PAYAB ACTING CHIEF OF PARTY		SHEET NO. 20/20
						DATE:	DATE:	DATE: 25 JUN 2019	DATE:	

د افغانستان اسلامي جمهوري دولت
د انرژی او اوبو وزارت

دولت جمهوری اسلامی افغانستان
وزارت انرژی و آب

ریاست عمومی تنظیم امور آب
ریاست عمومی حوزه دریائی شمال
ریاست برنامه ها
آمریت برنامه ها
مدیریت عمومی برنامه سربندها و کانالها

شماره: 402/253
تاریخ: ۱۳۹۸/۷/۲۰

☐ عاجل ☐ عادی ☐ اطمینانیه ☐ ابلاغیه ☐ سایر

بدفتر محترم سویم(SWIM)مقیم مزارشریف!

موضوع: ارسال اسناد تخنیکی پروژه سربندکانال باغ پهلوان واقع در ولسوالی شولگره ولایت بلخ

بجواب مکتوب نمبر 66 بر19 مورخ1398/7/14 دفتر محترم احتراماً مینگاریم:

مکتوب نمبر 491 بر226 مورخ1398/7/17 آمریت برنامه ها و خدمات انجنیری ریاست محترم حوزه فرعی دریائی بلخ بجواب مکتوب نمبر 397 بر235 مورخ1398/7/15 اینریاست واصل و چنین نگاشته اند:

ارقام دیسچارچ اعظمی مقدار جریان آب دریای بلخ به اساس ریکارد استیشن هایدرولوژیکی رباط بالا که سربند کانال باغ پهلوان در فاصله 26 کیلومتری ازآن بطرف بالا موقعیت دارد($1190M^3$) در بین سالهای(2014-2013)میباشد، همچنان دو پروژه تحکیماتی سواحل دریای بلخ در قریه تاجیک ایلتن که حدود45 کیلو متر بالاتر از استیشن رباط بالا موقعیت دارد توسط دفتر محترمPCU به اساس دیسچارچ($1190M^3$) به ارزش مجموعی 3.6 میلیون دالر دیزاین و محاسبه گردیده و کار آن عملاً در ساحه جریان دارد با آنهم طبق هدایت مکتوب فوق الذکر ریاست محترم اسناد پروژه متذکره مورد تائید اینریاست میباشد، موارد فوق الذکر نگارش یافت در صورتیکه در آینده سربند متذکره از اثر ورود سیلاب های مدهش دریای بلخ تخریب گردد آنگاه مسئولیت آن بدوش این اداره نخواهد بود.

مراتب واصله نقلاً ارقام یافت در زمینه قابل ذکر است پروژه کانال باغ پهلوان که مقدار جریان اعظمی آن از جانب ریاست محترم منابع آب در مرکزمحاسبه گردیده مورد تایید این اداره بوده و ضم هذا 24 ورق اسناد تخنیکی آن بعد از تاییدی حوزه فرعی مربوط و این اداره غرض اجراات بعدی احتراماً گسیل است میباشد.

با احترام

دیپلوم انجنیر عصمت الله "عصمت"
رئیس عمومی حوزه دریائی شمال

کاپی عـــــــــــــــــ بریاست محترم برنامه های آب.

آدرس: پل تصدی، مقابل لیسه علی چوپان، شهر مزار شریف – ولایت بلخ
email: north.riverbasin@gmail.com
Tel: +93799449276