GOVERNMENT OF ISLAMIC REPUBLIC OF AFGHANISTAN

Strengthening Watershed and Irrigation Management (SWIM)
AECOM

IFC
02 SEP 2019

SWIM STRENGTHENING WATERSHED AND IRRIGATION MANAGEMENT

Project Name: Sia Ab Secondary Canal Rehabilitation
Province: Badakhshan
District: Kishem

Afghanistan, Badakhshan
Date: 8-July-2019

Sia Aab Canal
Kisham, Badakhshan

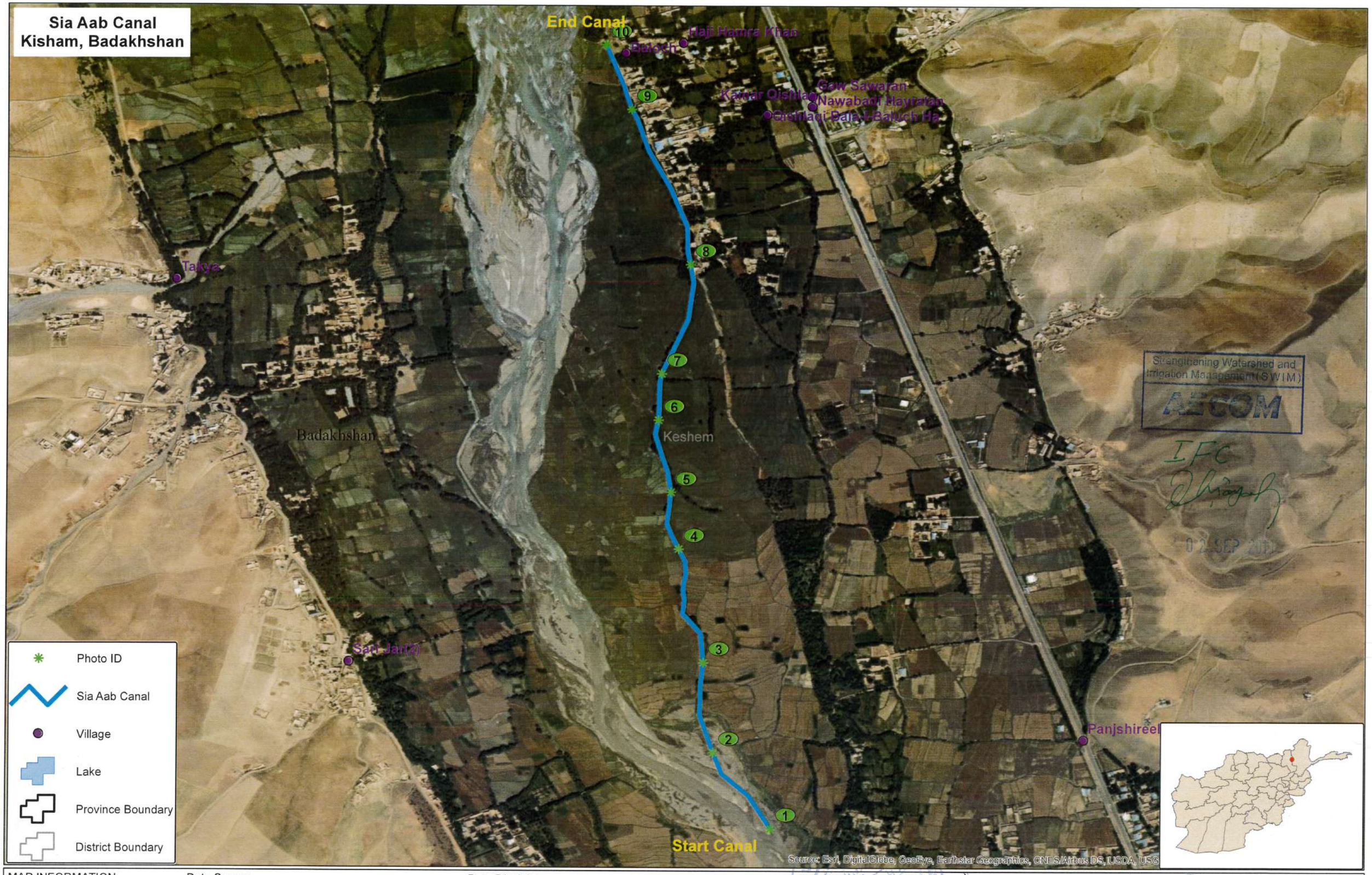

MAP INFORMATION
Map Produced : October 2017
Cartographer: Abdul Razaq
Projection : World Mercator
Datum : WGS 1984

Data Source
Base layer information including boundaries and place names courtesy of the Afghan Geodesy and Cartography Head Office (AGCHO).

Data Disclaimer
All boundaries and map features are approximate and should not be considered authoritative.
While every effort is made to use the best available data, accuracy of features or other information cannot be guaranteed.
Map prepared by the SWIM Project GIS Department.

N W E S

0 0.1 0.2 0.4 0.6 0.8 Kilometers

USAID FROM THE AMERICAN PEOPLE

GENERAL:

1. SAMPLE OF ALL MATERIALS (STONE, PCC, STEEL GATES, RCC, GRAVEL, SAND, DRY STONE, PVC PIPE, GUARD RILL, WATER STOPPER, ETC.) SHALL BE APPROVED BY SWIM ENGINEER BEFORE THE CONTRACTOR USE FOR THE PROJECT, OTHERWISE SWIM ENGINEERS ARE AUTHORIZED TO REJECT THE USED MATERIALS.
2. ALL CONSTRUCTION WORKS SHALL BE CARRIED OUT WITH CLOSE COORDINATION AND PRIOR APPROVAL OF SWIM ENGINEERS. OTHERWISE SWIM ENGINEERS ARE AUTHORIZED TO REJECT THE EXECUTED WORKS AND CONTRACTOR HAS TO RE-DO IT.
3. ALL QUALITY CONTROL TESTS SHOULD BE CARRIED OUT BY THE CONTRACTOR IN A RECOGNIZED LABORATORY by AECOM SWIMM.
4. TO AVOID DELAY IN IRRIGATION, ALL DIVERSION WILL BE MADE WITH CONSULTATION OF COMMUNITY, EITHER THE DIVERSION SHALL BE MADE LEFT SIDE OR RIGHT SIDE OF THE CANAL

GABION:

1. THE STONE SIZE RANGES FROM 150 MM TO 250 MM. SMALL STONES SHOULD BE AVOIDED. THE STONES USED SHOULD HAVE A MINIMUM SIZE OF NOT LESS THAN "D" (MESH WIDTH) AND NOT GREATER THAN 3.5 TIMES "D", WHERE D IS THE SPECIFIED MESH WIDTH. LARGER STONES CAN BE USED PROVIDED THAT THEIR TOTAL VOLUME DOES NOT EXCEED 5% OF THE CELL VOLUME.

STONE MASONRY:

1. ALL STONE MASONRY WALLS SHALL BE WITH RATIO OF 1:4 CEMENT SAND MORTAR WITH CONSIDERING TO 35% OF MASONRY VOLUME.
2. ALL STONES SHALL BE FREE FROM DEFECTS LIKE CAVITIES, CRACKS, SAND HOLES, FLAWS, INJURIOUS VEINS, PATCHES OF LOOSE OR SOFT MATERIALS, ETC. ALSO, THE PERCENTAGE OF WATER ABSORPTION SHALL GENERALLY NOT EXCEED 5%, CERTIFICATION REQUIRED
3. STONES USED SHALL BE SMALL ENOUGH TO BE LIFTED AND PLACED BY HAND, LENGTH OF THE STONES SHALL NOT EXCEED THREE TIMES THEIR HEIGHTS, AND THE BREADTH OF THE BASE SHALL NOT BE GREATER THAN THREE-FOURTHS OR THE THICKNESS OF WALL OR LESS THAN 150MM. THE HEIGHT OF STONES FOR RUBBLE MASONRY MAY BE UP TO 300MM
4. STONES WITH ROUND FACES SHALL NOT BE USED AND NEVER EVER ACCEPTABLE.
5. ALL EXPOSED SURFACES OF MORTARED STONE MASONRY SHALL BE POINTED WITH THE CEMENT SAND MORTAR 1:3
6. FOR FACES OF THE STONEMASONRY THAT WILL BE BACKFILLED, CONTRACTOR IS TO MAKES SURE ALL GAPS BETWEEN STONES ARE FILLED WITH MORTAR.

Strengthening Watershed and Irrigation Management (SWIM)
AECOM
IFC
02 SEP 2019

CONCRETE:

1. CONCRETE DESIGN SHOULD BE BASED ON 28 DAYS A COMPRESSIVE STRENGTH OF 25MPa FOR RCC AND 20MPa FOR PCC AS SPECIFIED ON THE DRAWINGS.
2. REINFORCEMENT YIELD STRESS "FY" SHALL NOT BE LESS THAN 60000 PSI
3. A MAXIMUM OF 25% STONE WITH A MAXIMUM STONE SIZE OF (25 to 40) CM TO BE USED IN BOULDER CONCRETE. THE CONCRETE MARK SHALL BE 15MPa AS SPECIFIED IN DESIGN AND DRAWINGS.
4. SAND OR FINE AGGREGATE SHALL FREE FROM SALT, ALKALI, CALCIUM SULPHATE OR VEGETATION AND IT SHALL NOT CONTAIN MORE THAN 0.5 PERCENT BY WEIGHT CLAY.
5. AGGREGATE: - COARSE AGGREGATE SHALL CONSIST OF CRUSHED GRAVEL WITH THE MAX SIZE OF 20MM.
6. WATER USED FOR ALL CONCRETE MIXTURE AND CONCRETE CURING SHALL BE FROM A SOURCE APPROVED BY THE SWIM ENGINEER AND AT THE TIME OF USE SHALL BE FREE FROM CONTAMINANTS.
7. THE MAXIMUM SLUMP FOR CONCRETE SHOULD BE BETWEEN (5-7.5) CM.
8. CONCRETE COMPACTION SHOULD BE DONE BY USING CONCRETE VIBRATOR AT THE TIME OF POURING IN SUCH A WAY TO FORM A SOLID COMPACT CONCRETE.
9. ALL CONCRETE AND MASONRY WORKS CURING SHOULD BE CONTINUED FOR 14 DAYS.
10. DURING COLD WEATHER ALL CONCRETING AND MASONRY WORKS SHOULD BE STOPPED, OR THE CONTRACTOR HAS TO CONSIDER COLD WEATHER CONCRETING PROCEDURE AS ACCEPTED BY THE SWIM ENGINEER.
11. CONCRETE SHUTTERING/FRAMEWORK SHOULD BE DONE WITH HIGH STABILITY AND PROPER BRACING.
12. FOR ALL CONCRETE WORKS (RCC, PCC, BOULDER CONCRETE, MORTAR AND GROUT) SHALL BE MIXED BY CONCRETE MIXER. HAND MIXING IS NOT PERMISSIBLE UNLESS THE VOLUME OF CONCRETE IS LESS THAN $1M^3$ AND SHALL BE VERIFIED BY SWIM ENGINEERS AS WELL.
13. THE CONTRACTOR SHALL HAVE AN EXPERIENCED SITE ENGINEER FULL TIME ON THE PROJECT SITE FOR FOLLOW UP THE DESIGN, DRAWINGS AND QUALITY CONTROL PURPOSES. EXECUTION OF WORKS WITHOUT PRESENCE OF SITE ENGINEER IS NOT ACCEPTABLE AND PAYABLE BY SWIM.
14. TWO-COAT PORTLAND CEMENT-BASED PLASTER SHALL BE APPLIED IN ACCORDANCE WITH ASTM C 926 OR EQUIVALENT. THE FINAL COAT SHALL BE FINISHED TO A TRUE AND EVEN SURFACE FREE FROM ROUGH AREAS, CHECKS, OR BLEMISHES. NOMINAL PLASTER FINISH THICKNESS SHALL BE 20MM OR MORE AS DIRECT BY QC IN ENGINEER IN THE SITE).
15. INSTALLATION OF PVC OR HDPE WATER STOPPERS MUST BE SECURELY POSITIONED IN THE FORMS TO PREVENT DEFLECTION OR MISALIGNMENT DURING CONCRETE PLACEMENT. TYPE OF WATER STOPPER SHALL BE CONFORM WITH ASTM D412 AND ASTM D2240.

BACKFILLING:

1. BACKFILLING MATERIAL SHOULD BE PROPERLY TESTED AND SELECTED TO BE SUITABLE AS PER APPROVAL OF SWIM ENGINEER AND STANDARD PRACTICE.
2. FOR BACKFILLING MAXIMUM THICKNESS OF EACH LOOSE SOIL LAYER SHOULD NOT MORE THAN 15CM.
3. STANDARD COMPACTION TESTS SHOULD BE CARRIED OUT FOR THE BACKFILLING LAYERS BY LAYERS.
4. THE PERCENTAGE OF COMPACTION SHOULD BE NOT LESS THAN 95% OF THE MAXIMUM DRY DENSITY AS STATED IN DESIGN AND DRAWINGS.

AECOM
Strengthening Watershed and Irrigation Management (SWIM)

TABLE OF CONTENTS FOR SIA AB SECONDARY CANAL

SHEET #	SHEET CONTENTS	REMARKS
n/a	GIS Map	
n/a	General Note	
1	General Site Plan	
2 to 4	Plan and Profile	
5	Structure List With GPS Coordinates	
6	Turnout in Unlined	
7	Retaining wall 250 meter	
8	Retaining Wall 50 meter	
9	Drop Structure	
10	Bedbar	
11	Slab Culvert	
12	Foot Culvert	
13	Steel Slide Gate For Check in Unlined Canal	
14	Gate for Turnout Structure	

Strengthening Watershed and Irrigation Management (SWIM)
AECOM
IFC
02 SEP 2013

Strengthening Watershed and Irrigation Management (SWIM)
AECOM

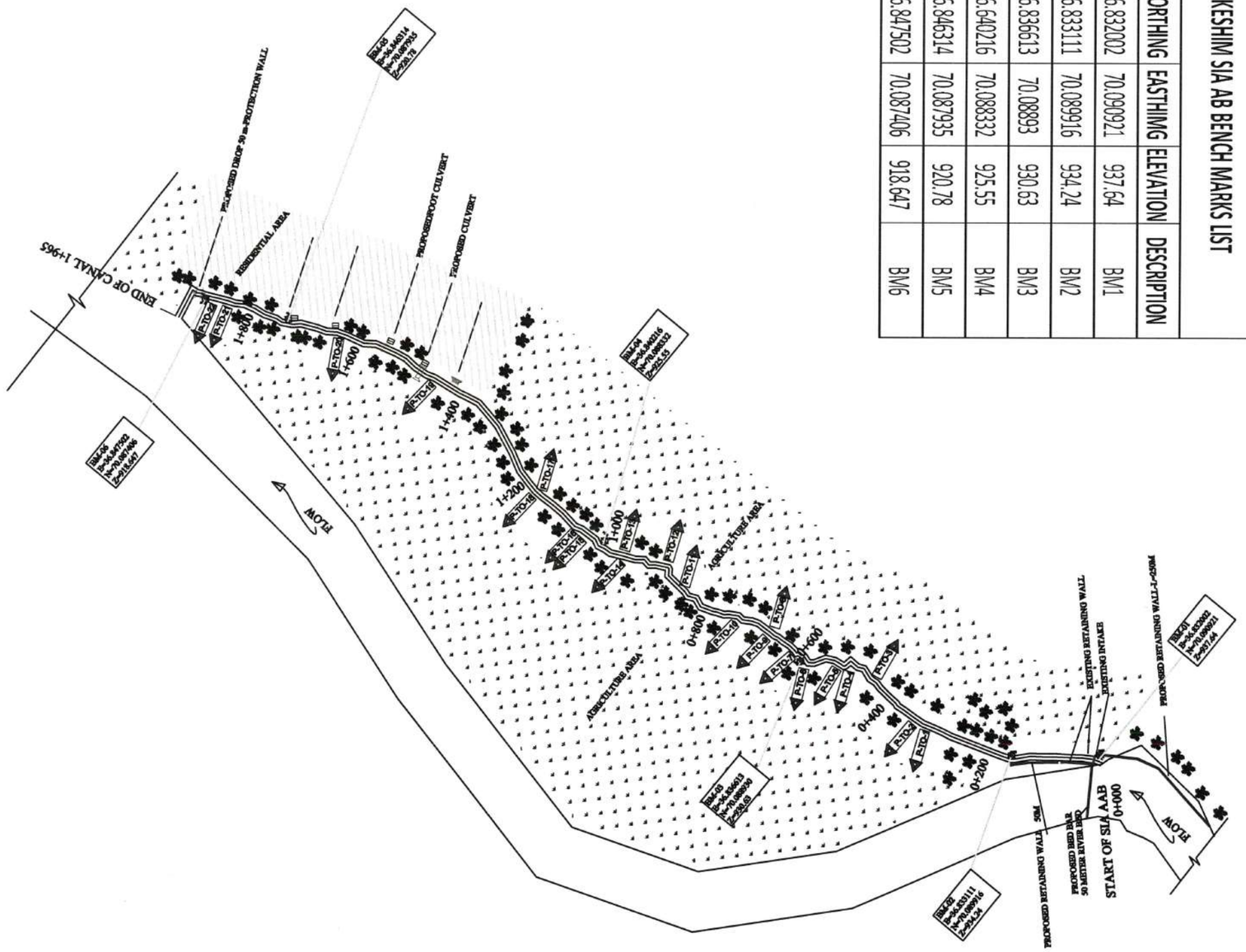
END OF CANAL 1+965
PROPOSED DROP 30 m PROTECTION WALL
RESIDENTIAL AREA
PROPOSED FOOT CULVERT
PROPOSED CULVERT
FLOW
AGRICULTURE AREA
Agriculture Area
EXISTING RETAINING WALL
EXISTING INTAKE
PROPOSED FEED DRAIN
50 METER RIVER BED
START OF SIA AAB
0+000
0+200
0+400
0+600
0+800
1+000
1+200
1+400
1+600
1+800
P-TO-1
P-TO-2
P-TO-3
P-TO-4
P-TO-5
P-TO-6
P-TO-7
P-TO-8
P-TO-9
P-TO-10
P-TO-11
P-TO-12
P-TO-13
P-TO-14
P-TO-15
P-TO-16
P-TO-17
P-TO-18
P-TO-19
P-TO-20
P-TO-21
P-TO-22
P-TO-23
P-TO-24
P-TO-25
P-TO-26
P-TO-27
P-TO-28
P-TO-29
P-TO-30
P-TO-31
P-TO-32
P-TO-33
P-TO-34
P-TO-35
P-TO-36
P-TO-37
P-TO-38
P-TO-39
P-TO-40

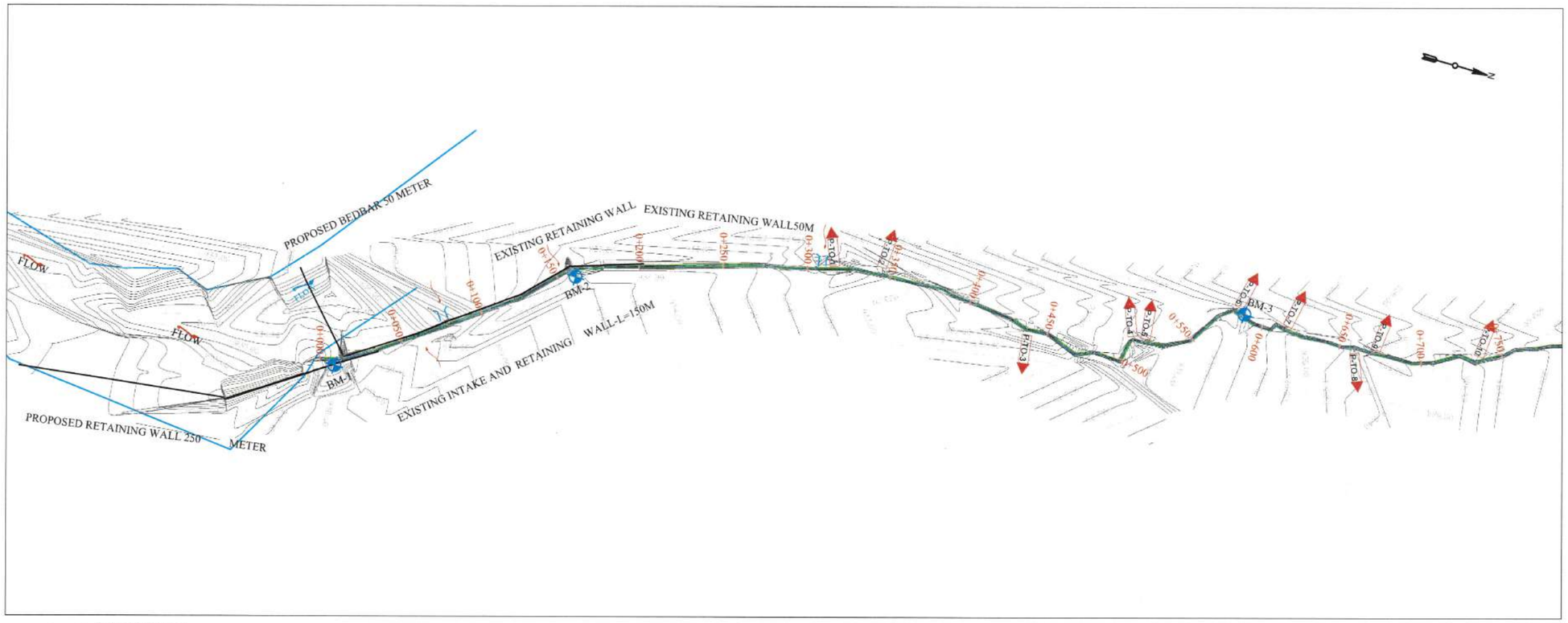

LEGEND:-

Agriculture Area	
Orchard(Garden)	
Bench Mark	
Parental Canal	
Main Canal	
Branch Canal	
P-Turn Out	Turn Out
Residential Area	
Road	
Existing Stone Masonry	
Proposed Stone Masonry	
Existing Culvert	
Proposed Culvert	
Masjid Sharif	
Electric Pole	
Cemetery	
Hand Water Pump	
Tree	
River	

A-02 PLAN AND PROFILE

SCALE 1: 1000

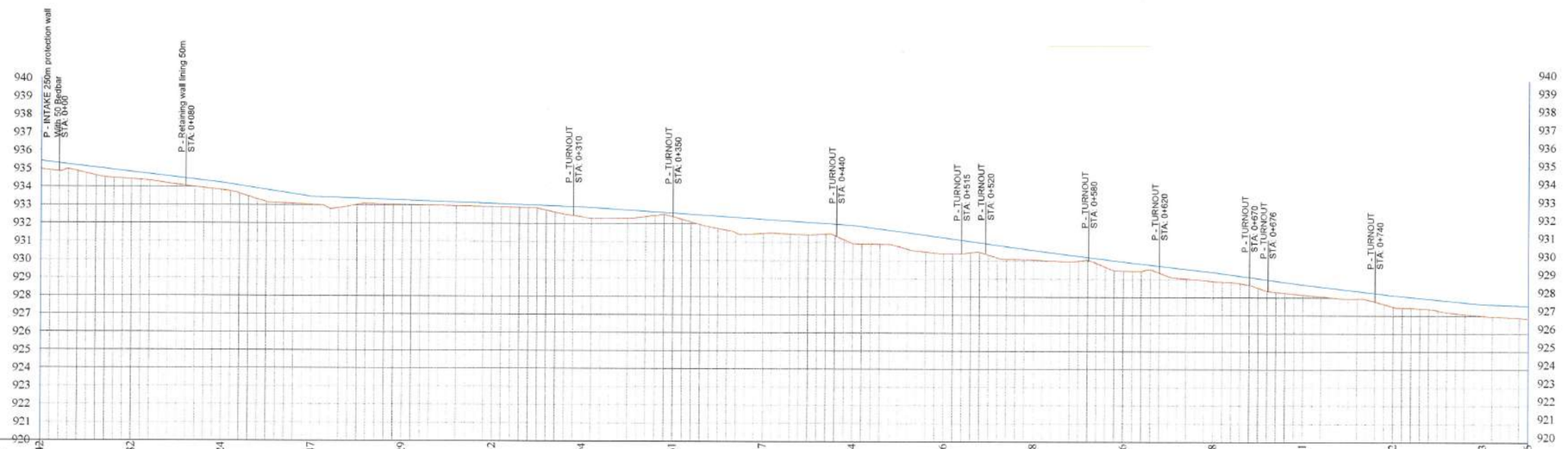

STATION	FSL	EXISTING BED ELEVATION
0+000	935.42	
0+050	934.82	934.41
0+100	934.24	933.83
0+150	933.47	933.04
0+200	933.29	933.05
0+250	933.12	932.93
0+300	932.94	932.37
0+350	932.61	932.39
0+400	932.27	931.49
0+450	931.94	930.93
0+500	930.26	930.39
0+550	930.58	930.05
0+600	929.96	929.45
0+650	929.38	928.88
0+700	928.71	928.14
0+750	928.12	927.50
0+800	927.63	926.99
0+825	927.56	

02 SEP 2013
IFC
Strengthening Watershed and Irrigation Management (SWIM)
AECOM

USAID FROM THE AMERICAN PEOPLE	STRENGTHENING WATERSHED & IRRIGATION MANAGEMENT SWIM	CANAL NAME	LOCATION	DRAWING TITLE	SURVEYED BY	DRAWING AND DESIGN BY	REVIEWED AND CHECKED BY	SWIM APPROVAL	MAIL/DAIL APPROVAL	SHEET NO.
		SIA AB SECONDARY CANAL	DISTRICT: KISHEM PROVINCE BADAKHSHAN	PLAN AND PROFILE	SWIM	MOHAMMAD AFZAL MUJAHID ENGINEER HYDRAULIC SPECIALIST	ENG. MOHAMMAD MOBIN OMID QA/QC & ENVIRONMENTAL COMPLIANCE DIRECTOR	GOOPRY HAZIER CHIEF OF PARTY		2 /14
						DATE:	DATE:	DATE: 8/5/13	DATE:	

LEGEND:-

Agriculture Area	
Orchard(Garden)	
Bench Mark	
Parental Canal	
Main Canal	
Branch Canal	
P-Turn Out	Turn Out
Residential Area	
Road	
Existing Stone Masonry	
Proposed Stone Masonry	
Existing Culvert	
Proposed Culvert	
Masjid Sharif	
Electric Pole	
Cemetery	
Hand Water Pump	
Tree	
River	

A-03 PLAN AND PROFILE

SCALE 1: 1000

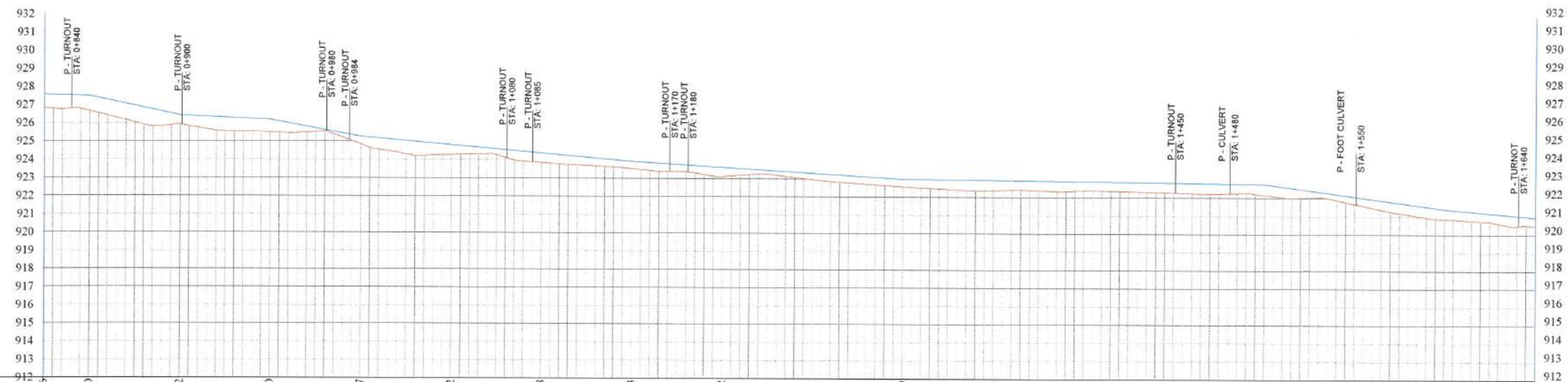

STATION	EXISTING BED ELEVATION	FSL
0+825	926.66	927.56
0+850	926.42	927.50
0+900	925.92	926.42
0+950	925.50	926.20
1+000	924.84	925.27
1+050	924.28	924.82
1+100	923.85	924.38
1+150	923.53	923.93
1+200	923.11	923.62
1+250	922.95	923.31
1+300	922.58	923.00
1+350	922.38	922.94
1+400	922.38	922.88
1+450	922.28	922.82
1+500	922.15	922.76
1+550	921.68	922.09
1+600	920.87	921.41
1+650		920.96

0 2 SEP 2019

IFC

Strengthening Watershed and Irrigation Management (SWIM)

AECOM

USAID FROM THE AMERICAN PEOPLE	STRENGTHENING WATERSHED & IRRIGATION MANAGEMENT SWIM	CANAL NAME	LOCATION	DRAWING TITLE	SURVEYED BY	DRAWING AND DESIGN BY	REVIEWED AND CHECKED BY	SWIM APPROVAL	MAIL/DAIL. APPROVAL	SHEET NO.
		SIA AB SECONDAY CANAL	DISTRICT: KISHEM PROVINCE:BADAKHSHAN	PLAN AND PROFILE	SWIM	MOHAMMAD AFZAL MUJAHID ENGINEER HYDRAULIC SPECIALIST	ENG. MOHAMMAD MOBIN OMID QA/QC & ENVIRONMENTAL COMPLIANCE DIRECTOR	HOPPY WATER CHIEF OF PARTY		3 /14
						DATE:	DATE:	DATE: 8/5/19	DATE:	

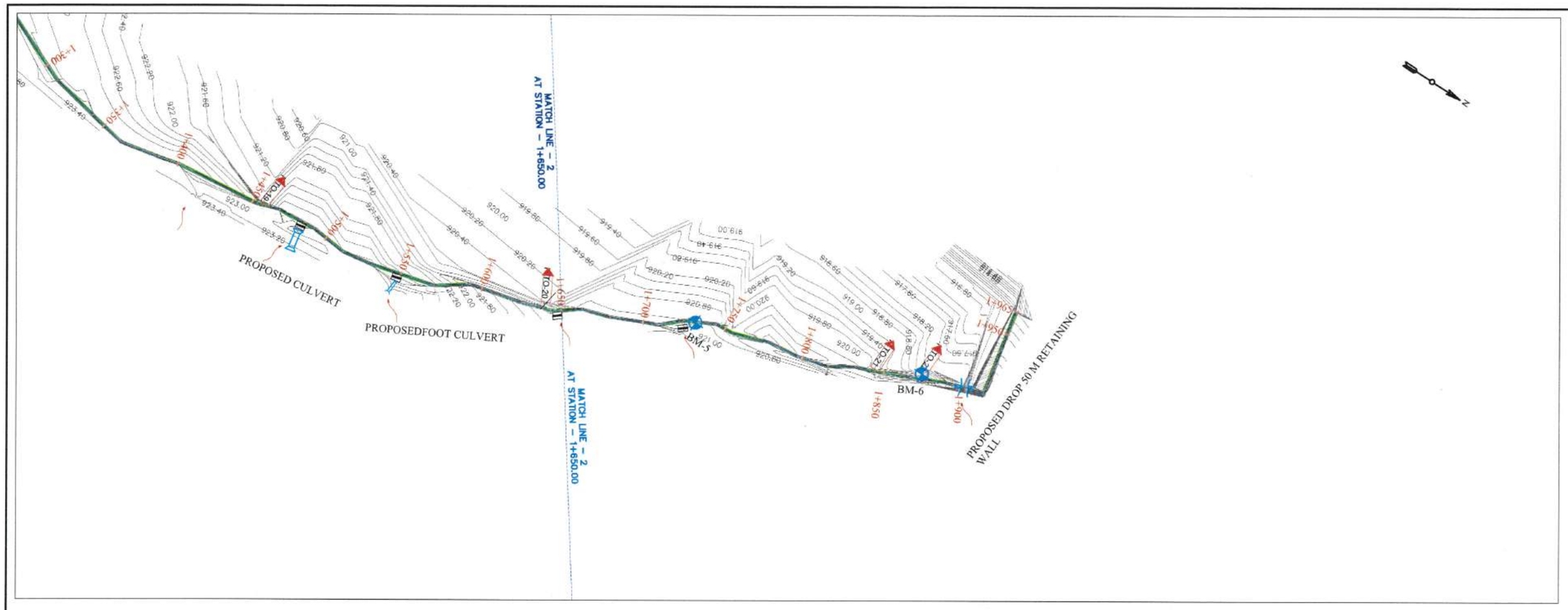

LEGEND:-

Agriculture Area	
Orchard(Garden)	
Bench Mark	
Parental Canal	
Main Canal	
Branch Canal	
P-Turn Out	Turn Out
Residential Area	
Road	
Existing Stone Masonry	
Proposed Stone Masonry	
Existing Culvert	
Proposed Culvert	
Masjid Sharif	
Electric Pole	
Cemetery	
Hand Water Pump	
Tree	
River	

A-04 PLAN AND PROFILE

SCALE 1: 1000

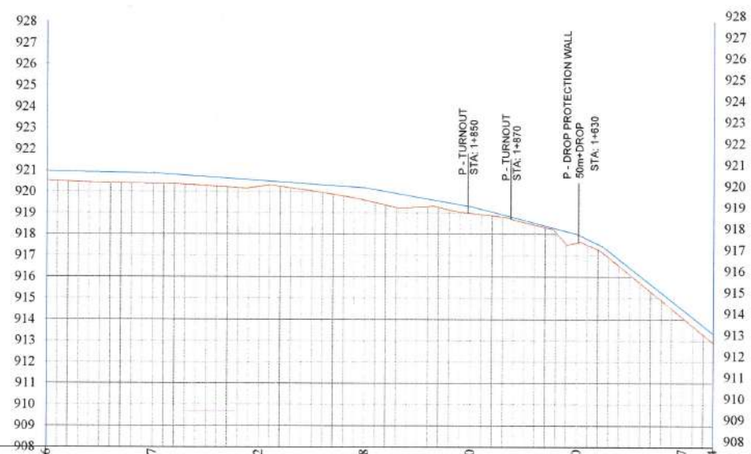

STATION	1+650	1+700	1+750	1+800	1+850	1+900	1+950	1+964.58
FSL	920.96	920.87	920.52	920.18	919.30	918.00	914.47	913.34
EXISTING BED ELEVATION		920.39	920.23	919.60	918.98	917.59	914.07	

02 SEP 2010
IFC

Strengthening Watershed and Irrigation Management (SWIM)
AECOM

USAID FROM THE AMERICAN PEOPLE	STRENGTHENING WATERSHED & IRRIGATION MANAGEMENT SWIM	CANAL NAME	LOCATION	DRAWING TITLE	SURVEYED BY	DRAWING AND DESIGN BY	REVIEWED AND CHECKED BY	SWIM APPROVAL	MAIL/DAIL APPROVAL	SHEET NO.
		SIA AB SECONDARY CANAL	DISTRICT: KISHEM PROVINCE:BADAKHSHAN	PLAN AND PROFILE	SWIM	MOHAMMAD AFZAL MUJAHID ENGINEER HYDRAULIC SPECIALIST	ENG. MOHAMMAD MOBIN OMID QA/QC & ENVIRONMENTAL COMPLIANCE DIRECTOR	HOPPY NAZIER CHIEF OF PARTY		4 /14
						DATE:	DATE:	DATE: 8/3/10	DATE:	

KESHEM SIA AB CANAL PROPOSED TURNOUT STRUCTURE LIST

S/NO	STATION	NORTING	EASTHING	ELEVATION	DESCRIPTION
1	0+310	36.83437	70.08943	932.29	Turnout-proposed
2	0+350	36.83465	70.08944	932.29	Turnout-proposed
3	0+440	36.83549	70.0895	931.37	Turnout-proposed
4	0+515	36.83611	70.08944	930.46	Turnout-proposed
5	0+520	36.83613	70.08942	930.44	Turnout-proposed
6	0+580	36.83652	70.08905	930.05	Turnout-proposed
7	0+620	36.83681	70.08909	929.34	Turnout-proposed
8	0+670	36.83721	70.08908	928.68	Turnout-proposed
9	0+676	36.83719	70.08906	928.66	Turnout-proposed
10	0+740	36.83791	70.08896	927.77	Turnout-proposed
11	0+840	36.83876	70.08875	926.8	Turnout-proposed
12	0+900	36.83912	70.08879	925.92	Turnout-proposed
13	0+980	36.83987	70.0886	925.55	Turnout-proposed
14	0+984	36.83985	70.0885	925.54	Turnout-proposed
15	1+080	36.84066	70.08852	924.13	Turnout-proposed
16	1+085	36.84065	70.0885	924.12	Turnout-proposed
17	1+170	36.84147	70.08854	923.39	Turnout-proposed
18	1+180	36.834165	70.08858	923.35	Turnout-proposed
19	1+450	36.84398	70.08918	922.28	Turnout-proposed
20	1+640	36.84729	70.08791	920.5	Turnout-proposed
21	1+850	36.84757	70.08781	918.99	Turnout-proposed
22	1+870	36.84781	70.0871	918.71	Turnout-proposed

KESHEM SIA AB CANAL DROP AND CULVERT AND WASH STRUCTURE LIST

S/NO	STATION	NORTING	EASTING	ELEVATION	Description
1	1+480	36.84423	70.08912	922.24	culvert
2	1+550	36.84477	70.08911	921.68	foot culvert
3	1+900	36.84783	70.08774	917.59	Drop structure

KESHEM SIA AB CANAL PROPOSED SPILL WAY,RETAINING WALL STRUCTURE LIST

S/NO	STATION	NORTING	EASTING	ELEVATION	Description
1	0+00	36.83195	70.09096	934.84	Protectoin wall 250m
3	0+080	36.835	70.0905	933.9	protecton wall 50 meter
2	1+900	36.8478	70.08774	917.59	protectoin wall for drop

CANAL LINING IS NOT NEEDED

02 SEP 2019

IFC

Strengthening Watershed and Irrigation Management (SWIM)

AECOM

USAID FROM THE AMERICAN PEOPLE	STRENGTHENING WATERSHED & IRRIGATION MANAGEMENT SWIM	CANAL NAME	LOCATION	DRAWING TITLE	SURVEYED BY	DRAWING AND DESIGN BY	REVIEWED AND CHECKED BY	SWIM APPROVAL	MAIL/DAIL APPROVAL	SHEET NO.
		SIA AB SECONDARY CANAL	DISTRICT: KISHEM PROVINCE: BADAKHSHAN	STRUCTURE LIST ALONG WITH GPS COORDINATES	SWIM	MOHAMMAD AFZAL MUJAHID ENGINEER HYDRAULIC SPECIALIST	ENG. MOHAMMAD MOBIN OMID QA/QC & ENVIRONMENTAL COMPLIANCE DIRECTOR	HOPPY MAYER CHIEF OF PARTY		5/14
						DATE:	DATE:	DATE: 8/5/19	DATE:	

TABLE OF TURN OUTS

No	Canal Lining Detail	Dimensions (M)			Station		Canal Slope	Flow Depth	Discharge
		Num	Hight	Width	Start	End			
1	Sia Ab Secondary Canal	22	0.7	0.8	**0+000**	**1+950**	0.02	0.5	1.3 cum

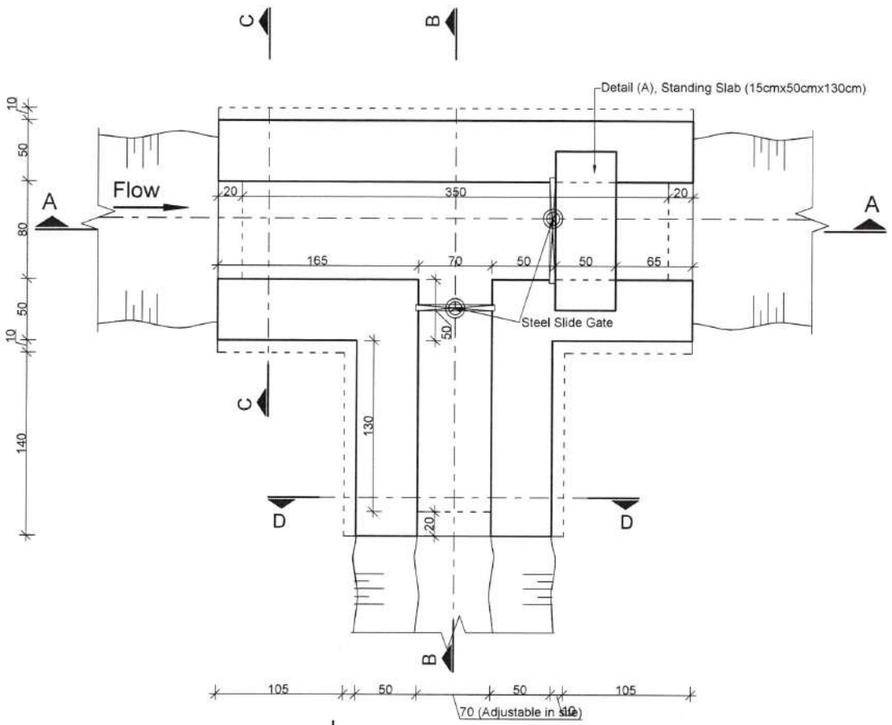

Plan of Turnout in Unlined Canal
REF. SCALE: 1:50

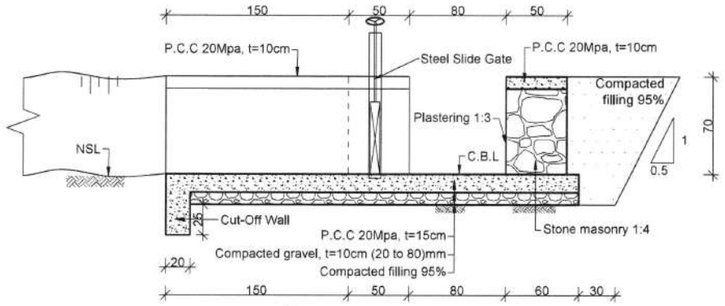

Section "B-B"
REF. SCALE: 1:50

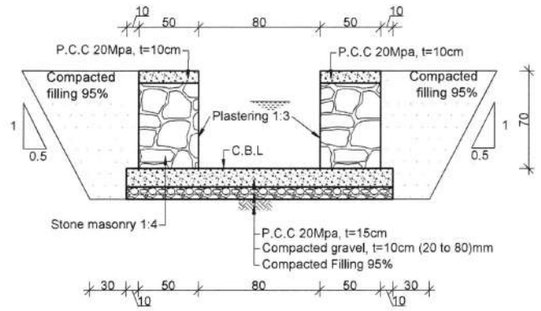

Section "C-C"
REF. SCALE: 1:50

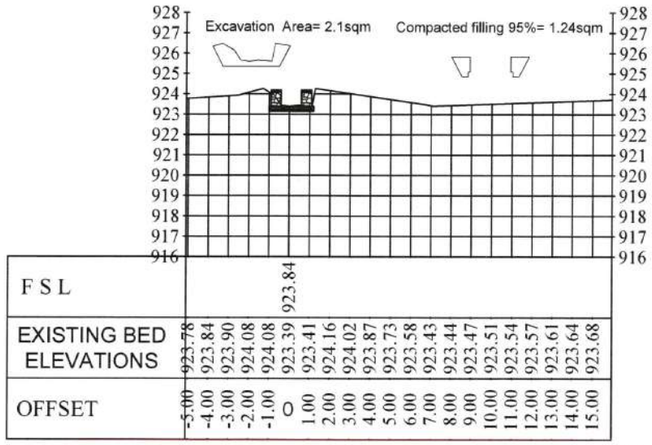

SIA AB CANAL CUTTING AND FILLING FOR TURNOUTS

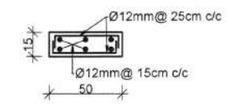

Detail "A"
REF. SCALE: 1:50

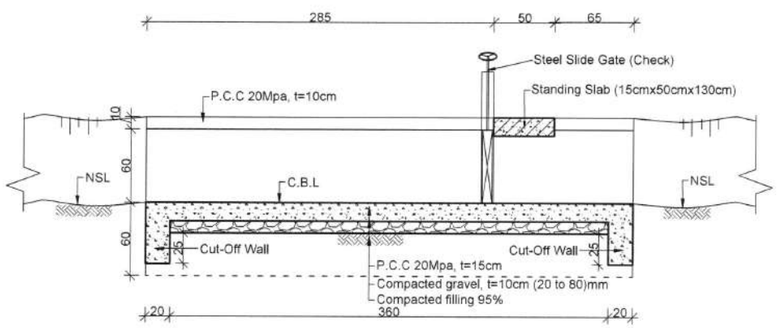

Section "A-A"
REF. SCALE: 1:50

Note:
1. Unless noted otherwise, linear dimensions shown on drawing are in centimeters (cm), and elevations are in meters (m).
2. The construction joints are recommended after each segment of 20M length of stone masonry along canal lining.
3. The joint's gape will be around (3.5 to 4)cm and should be filled properly as specified in technical specification.
4. The control joints are recommend on P.C.C coping and Canal Bed of all canal linings @ 2.5M c/c with approximately 5mm wide.
5. Excavation for the Foundation should be checked by the site Engineer as per drawing and Tech Specs.
6. Sand and Gravel should be clean and free from organic material.
7. All filling should be compacted properly in layers of 15cm each as specified in drawing and technical specification.
8. Stone masonry should be done by Mortar (1:4).
9. Fresh cement to be used.
10. Clean water should be used (suitable for drinking).
11. Angle of walls to be adjusted by SWIM engineer as per site conditions.

02 SEP 2010
IFC

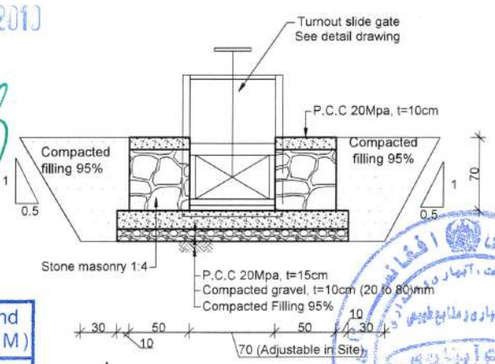

Section "D-D"
REF. SCALE: 1:50

Strengthening Watershed and Irrigation Management (SWIM)
AECOM

USAID FROM THE AMERICAN PEOPLE

STRENGTHENING WATERSHED & IRRIGATION MANAGEMENT SWIM	CANAL NAME	LOCATION	DRAWING TITLE	SURVEYED BY	DRAWING AND DESIGN BY	REVIEWED AND CHECKED BY	SWIM APPROVAL	MAIL/DAIL, APPROVAL	
	SIA AB SECONDARY CANAL	DISTRICT KISHEM PROVINCE BADAKHSAN	TURNOUT IN EARTHEN CANAL PLAN AND SECTIONS	SWIM	MOHAMMAD AFZAL MUJAHID ENGINEER HYDRAULIC SPECIALIST DATE:	ENG. MOHAMMAD MOBIN OMID QA/QC & ENVIRONMENTAL COMPLIANCE DIRECTOR DATE:	HORTENSIA VIDAURI ACTING CHIEF OF PARTY DATE:	DATE:	SHEET NO. 6 /14

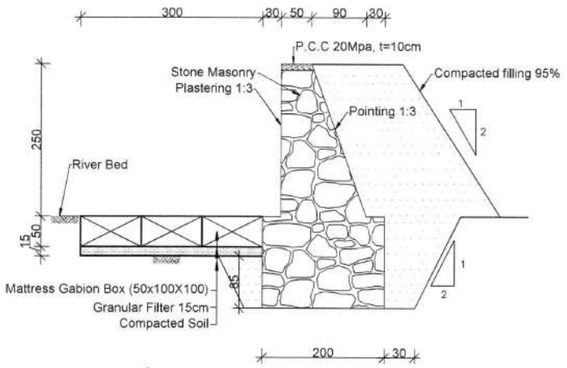

SECTION B-B Retaining Wall, L=250m RIVER SIDE

REF. Station 0+00 to 0+250 SCALE: 1:100

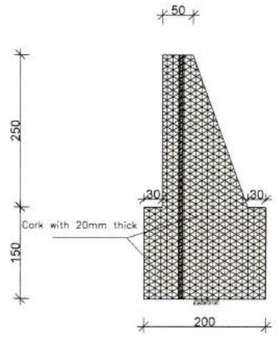

CONSTRUCTION JOINT DETAIL

REF. Station 0+00 to 0+250 SCALE: 1:100

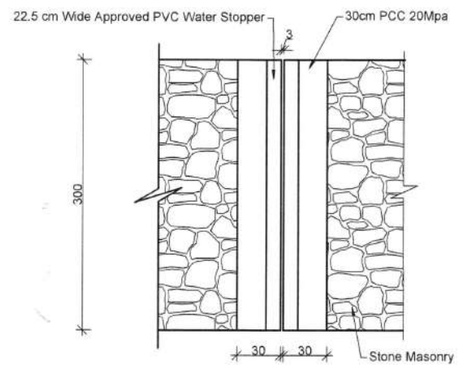

SECTION "C-C"

REF. Construction joint SCALE: 1:50

02 SEP 2010

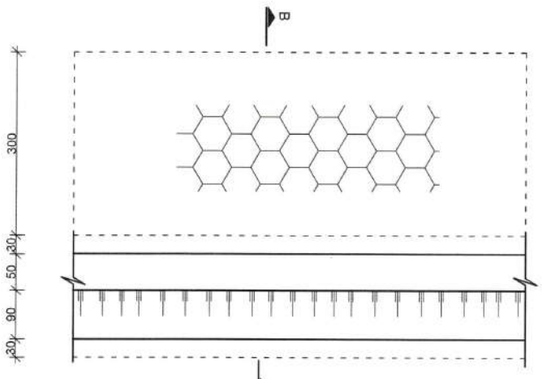

PLAN OF RETAINING WALL 250 M

REF. Station 0+00 to 0+250 SCALE: 1:100

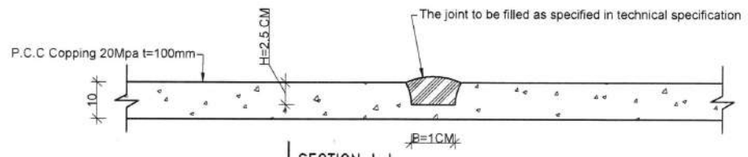

SECTION I-I

REF. SCALE: 1:50

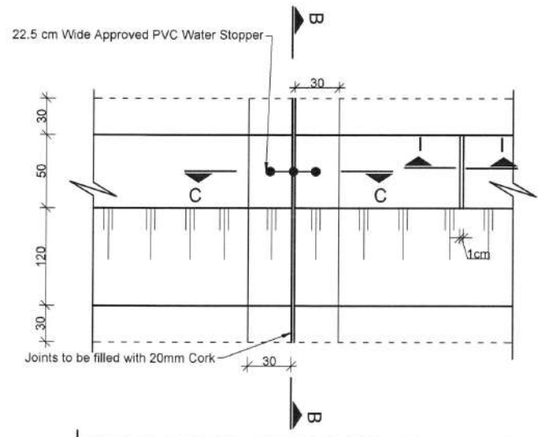

PLAN OF EXPENSION JOINT FOR RETAINING WALL @15M C/C

REF. Construction joint SCALE: 1:50

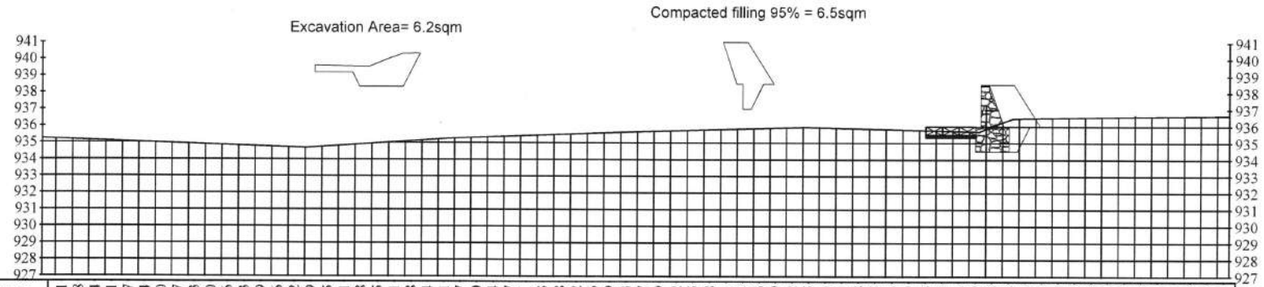

| EXISTING BED ELEVATIONS | 935.21 | 935.18 | 935.14 | 935.11 | 935.07 | 935.04 | 935.00 | 934.97 | 934.93 | 934.90 | 934.86 | 934.83 | 934.79 | 934.76 | 934.72 | 934.69 | 934.75 | 934.81 | 934.88 | 934.95 | 935.01 | 935.08 | 935.14 | 935.21 | 935.27 | 935.30 | 935.34 | 935.37 | 935.41 | 935.45 | 935.48 | 935.52 | 935.56 | 935.59 | 935.63 | 935.67 | 935.69 | 935.72 | 935.75 | 935.78 | 935.81 | 935.84 | 935.86 | 935.89 | 935.92 | 935.95 | 935.93 | 935.91 | 935.88 | 935.85 | 935.83 | 935.80 | 935.78 | 935.75 | 935.72 | 935.70 | 937.28 | 937.98 | 937.82 | 937.66 | 937.49 | 937.33 | 937.16 | 936.99 | 936.83 | 936.66 | 936.60 | 936.61 | 936.62 | 936.63 | 936.63 |
|---|---|---

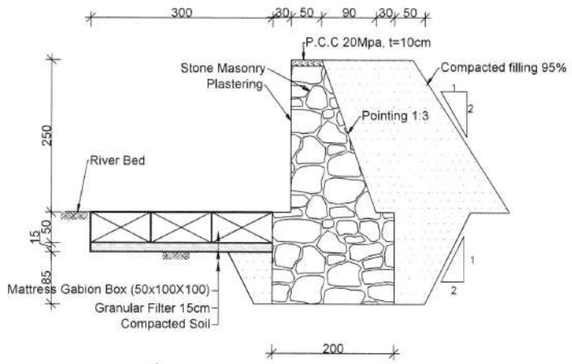

Retaining Wall, L=50m Canal Side
REF. Station 0+080 to 0+130 SCALE: 1:100

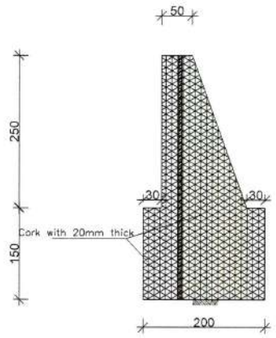

CONSTRUCTION JOINT DETAIL
REF. Station 0+080 to 0+130 canal SCALE: 1:100

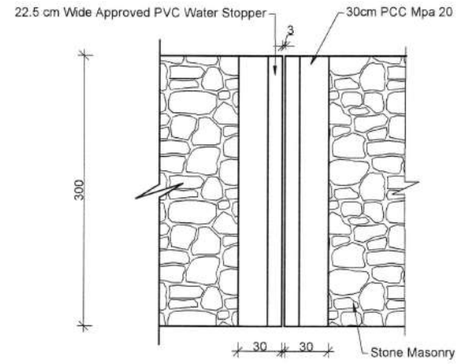

SECTION "C-C"
REF. Construction joint SCALE: 1:50

02 SEP 2019

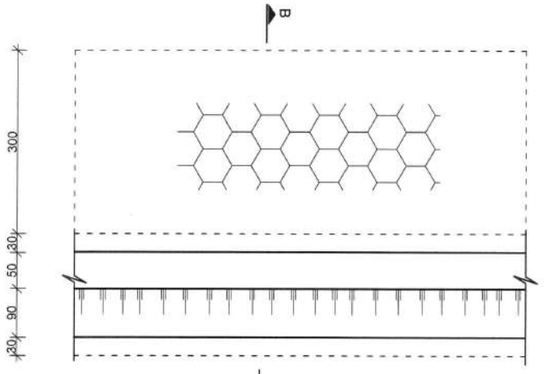

PLAN OF RETAINING WALL 50 M
REF. Station 0+080 to 0+130 Canal SCALE: 1:100

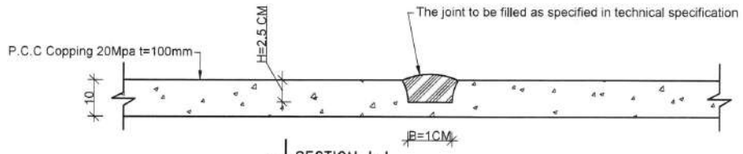

SECTION I-I
REF. SCALE: 1:50

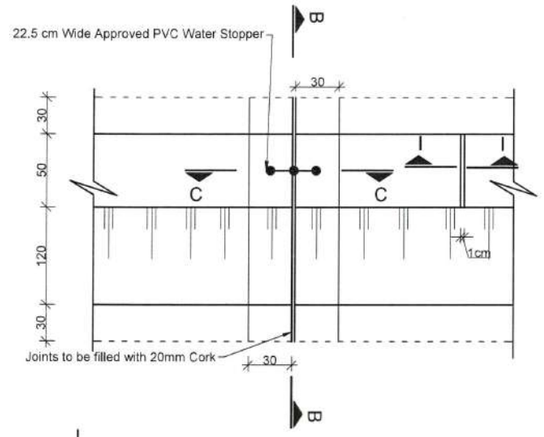

PLAN OF EXPENSION JOINT FOR RETAINING WALL @15M C/C
REF. Construction joint SCALE: 1:50

Excavation Area = 6.5sqm Compacted filling 95%= 6.5sqm

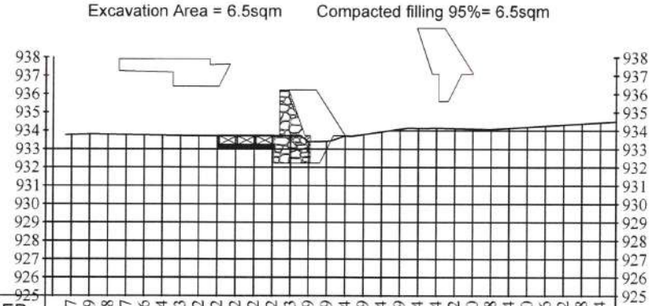

EXISTING BED ELEVATIONS	933.77	933.79	933.78	933.77	933.76	933.74	933.73	933.72	933.72	933.72	933.72	933.73	933.39	932.79	933.14	933.79	933.94	934.09	934.14	934.14	934.12	934.10	934.08	934.14	934.20	934.26	934.32	934.38	934.44
OFFSET	-15.00	-14.00	-13.00	-12.00	-11.00	-10.00	-9.00	-8.00	-7.00	-6.00	-5.00	-4.00	-3.00	-2.00	-1.00	0	1.00	2.00	3.00	4.00	5.00	6.00	7.00	8.00	9.00	10.00	11.00	12.00	13.00	14.00	15.00

SIA AB CANAL CUTTING AND FILLING FOR RETAINING WALL
AT STATION: (0+080 TO 0+130) CANAL SIDE

IFC

Note:

1: Unless noted otherwise, linear dimensions shown on drawing are in centimeters (cm), and elevations are in meters (m).
2: Excavation for the Foundation should be checked by the site Engineer,
3: Sand and Gravel should be clean and free from organic material
4: All filling should be compacted properly in layers of 15cm each as specified in drawing and technical specification
5: Stone masonry should be done by Mortar (1:4)
6: Angle and length of wing walls to be adjusted by SWIM engineer as per site conditions
7: Gravel: Material passing a 75-mm (3-inch) sieve and retained on a 4.75-mm (No.4) sieve.
8: Coarse Sand: Material passing a 4.75-mm sieve (No. 4) and retained on a 2.00-mm (No.10) sieve.
9: Fine Sand: Material passing a 0.475-mm (No. 40) sieve and retained on a 0.075-mm (No. 200) sieve.

Strengthening Watershed and Irrigation Management (SWIM)
AECOM

USAID FROM THE AMERICAN PEOPLE	STRENGTHENING WATERSHED & IRRIGATION MANAGEMENT SWIM	CANAL NAME	LOCATION	DRAWING TITLE	SURVEYED BY	DRAWING AND DESIGN BY	REVIEWED AND CHECKED BY	SWIM APPROVAL	MAIL/DAIL APPROVAL	SHEET NO.
		SIA AB SECONDARY CANAL	DISTRICT KISHEM PROVINCE BADAKHSAN	RETAINING WALL SECTIONS AND DETAIL	SWIM	MOHAMMAD AFZAL MUJAHID ENGINEER HYDRAULIC SPECIALIST	ENG. MOHAMMAD MOBIN OMID QA/QC & ENVIRONMENTAL COMPLIANCE DIRECTOR	HORTENSIA VIDAURI ACTING CHIEF OF PARTY		8 /14
						DATE:	DATE:	DATE:	DATE:	

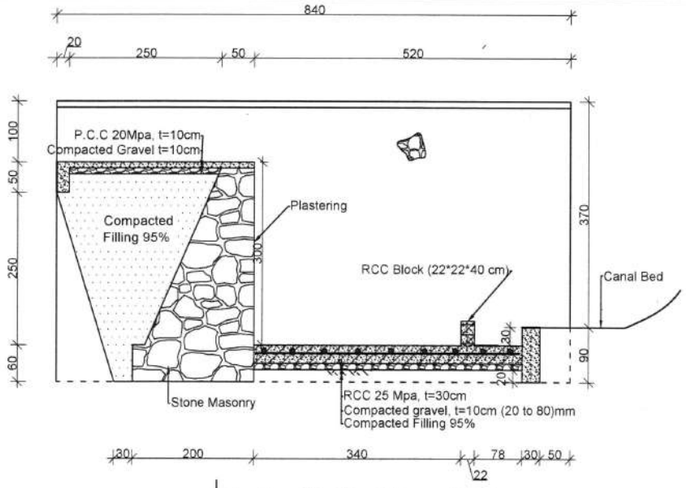

Section "A-A" of Drop Structure

REF. ST (1+930) SCALE: 1:100

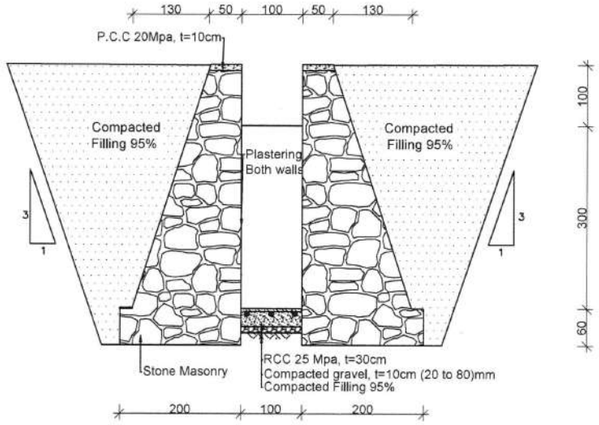

Section "B-B" of Drop Structure

REF. SCALE: 1:100

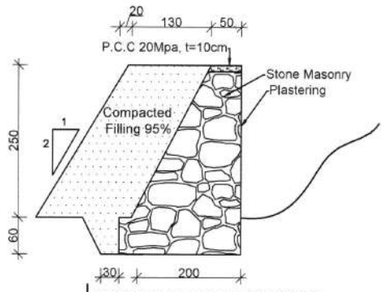

SECTION C-C of DROP STRUCTURE

REF. SCALE: 1:100

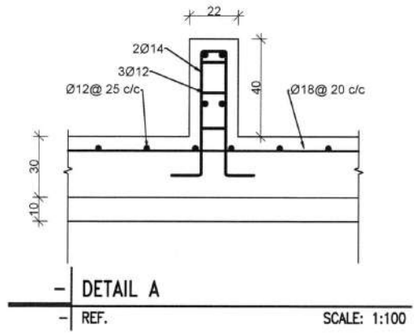

DETAIL A

REF. SCALE: 1:100

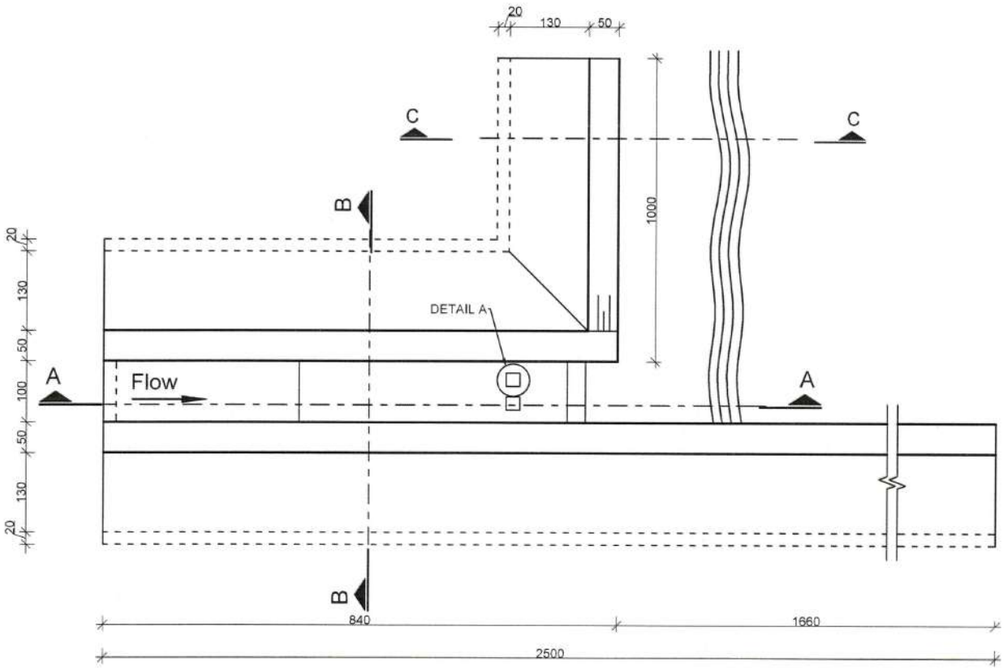

PLAN of Drop Structure

REF. ST (1+930) SCALE: 1:100

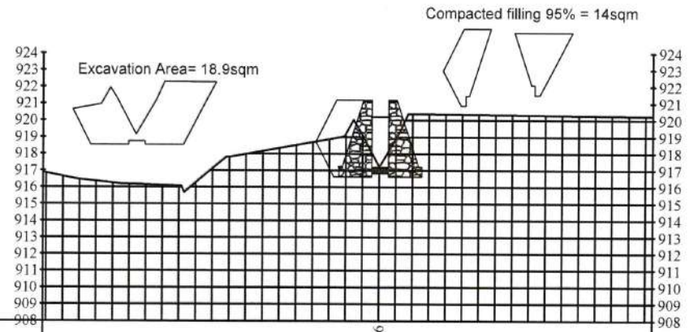

FSL	917.46
EXISTING BED ELEVATIONS	916.83, 916.63, 916.44, 916.34, 916.24, 916.17, 916.14, 916.11, 916.08, 916.27, 917.11, 917.81, 917.98, 918.15, 918.33, 918.51, 918.69, 918.86, 919.19, 919.09, 917.21, 918.91, 920.37, 920.36, 920.35, 920.34, 920.34, 920.33, 920.32, 920.31, 920.30, 920.29, 920.28, 920.27, 920.26, 920.25, 920.24
OFFSET	-20.00, -19.00, -18.00, -17.00, -16.00, -15.00, -14.00, -13.00, -12.00, -11.00, -10.00, -9.00, -8.00, -7.00, -6.00, -5.00, -4.00, -3.00, -2.00, -1.00, 0, 1.00, 2.00, 3.00, 4.00, 5.00, 6.00, 7.00, 8.00, 9.00, 10.00, 11.00, 12.00, 13.00, 14.00, 15.00, 16.00

SIA AB CANAL CUTTING AND FILLING FOR DROP STRUCTURE AT STATION: (1+930)

Bar Schedule (No. of bars and total bar length presented for 1m drop)

Member	Bar Diameter	Shape Code	No. of Bars	Segment length (mm) a	b	c	d	e	Total length - *varies* (metres)
Block	18	a	5	900					4.5
Block	12	a	4	1000					4
Block	14	a b c	2	450	180	300			3.5
Block	12	a b c d	3	200	200	200	200		2.5

Note:

1: Unless noted otherwise, linear dimensions shown on drawing are in centimeters (cm), and elevations are in meters (m).
2: Excavation for the Foundation should be checked by the site Engineer,
3: Sand and Gravel should be clean and free from organic material
4: All filling should be compacted properly in layers of 15cm each as specified in drawing and technical specification
5: Stone masonry should be done by Mortar (1:4)
6: Angle and length of wing walls to be adjusted by SWIM engineer as per site conditions
7: Gravel: Material passing a 75-mm (3-inch) sieve and retained on a 4.75-mm (No.4) sieve.
8: Coarse Sand: Material passing a 4.75-mm sieve (No. 4) and retained on a 2.00-mm (No.10) sieve.
9: Fine Sand: Material passing a 0.475-mm (No. 40) sieve and retained on a 0.075-mm (No. 200) sieve.

EFC

Strengthening Watershed and Irrigation Management (SWIM)

AECOM

02 SEP 2010

USAID FROM THE AMERICAN PEOPLE	STRENGTHENING WATERSHED & IRRIGATION MANAGEMENT SWIM	CANAL NAME	LOCATION	DRAWING TITLE	SURVEYED BY	DRAWING AND DESIGN BY	REVIEWED AND CHECKED BY	SWIM APPROVAL	MAIL/DAIL APPROVAL	SHEET NO.
		SIA AB SECONDARY CANAL	DISTRICT :KISHEM PROVINCE: BADAKHSAN	DROP SECTIONS AND DETAIL	SWIM	MOHAMMAD AFZAL MUJADDIDI HYDRAULIC SPECIALIST	ENG. MOHAMMAD MOBIN OMID QA/QC & ENVIRONMENTAL COMPLIANCE DIRECTOR	HORTENSIA VIDAURRI ACTING CHIEF OF PARTY		9 /14
						DATE:	DATE	DATE:	DATE:	

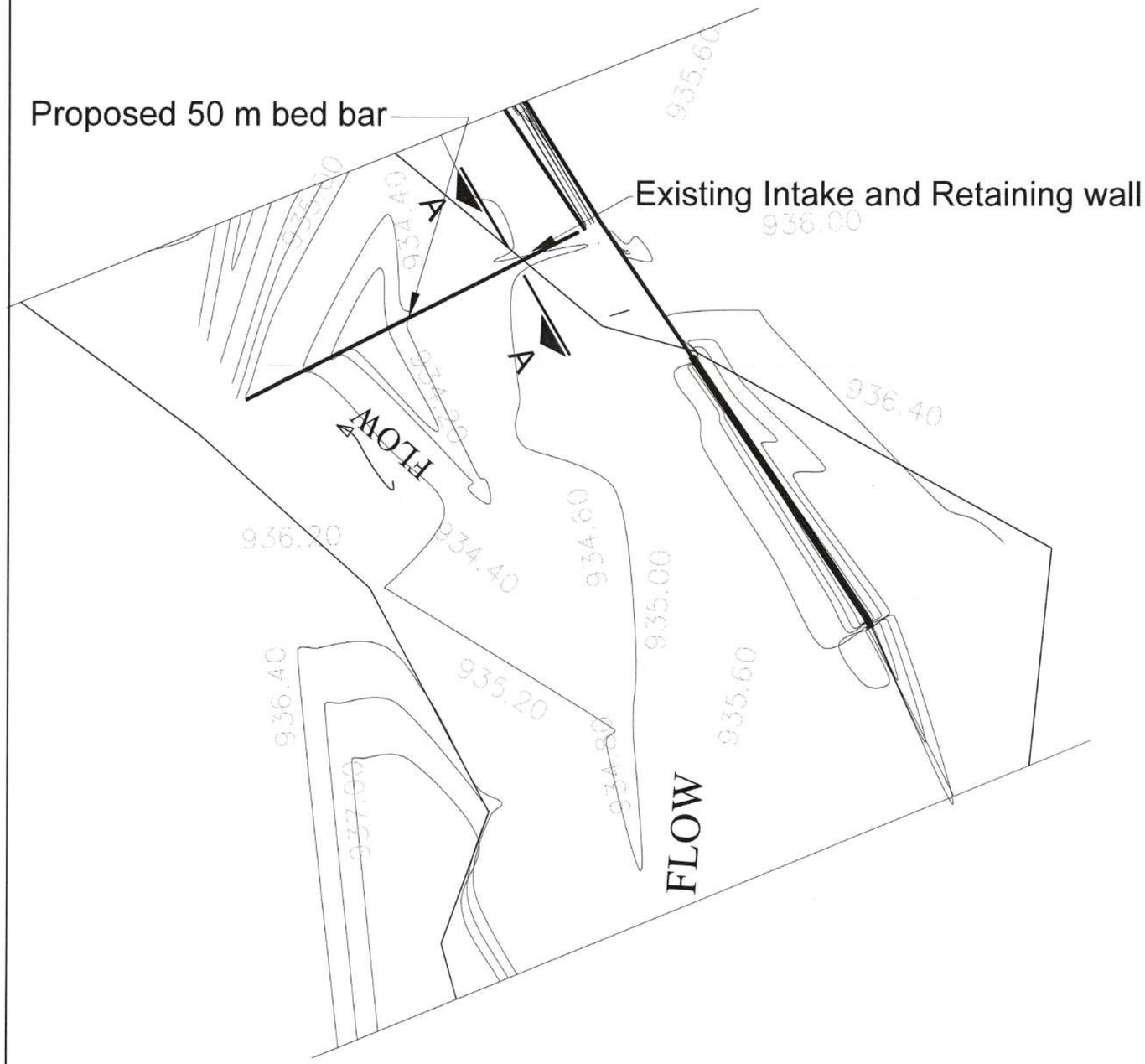

General Plan for Bed Bar

REF. SCALE:

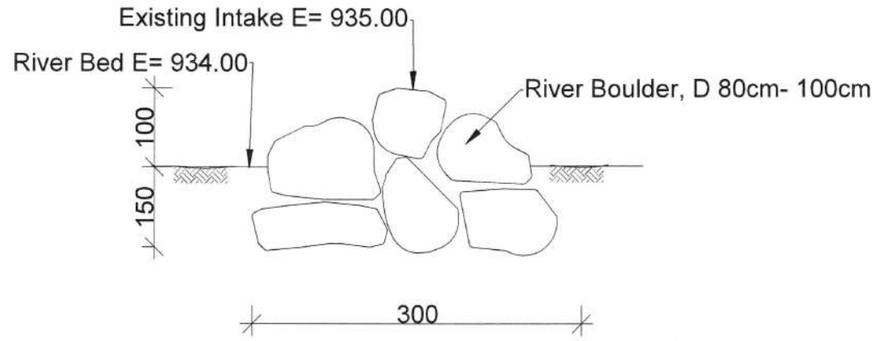

Bed Bar Section A-A

REF. L=50m SCALE: 1:50

02 SEP 2010

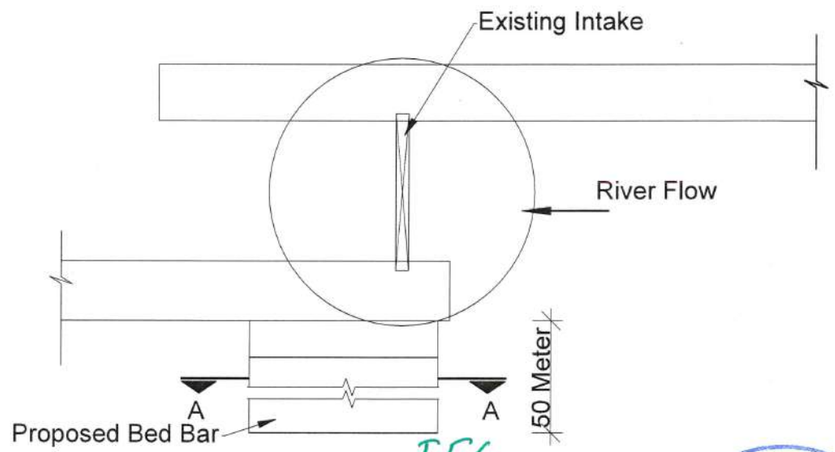

Plan for Bed Bar

REF. Existing Intake with Proposed Bed Bar SCALE: 1:100

Strengthening Watershed and Irrigation Management (SWIM)

AECOM

USAID FROM THE AMERICAN PEOPLE	STRENGTHENING WATERSHED & IRRIGATION MANAGEMENT SWIM	CANAL NAME	LOCATION	DRAWING TITLE	SURVEYED BY	DRAWING AND DESIGN BY	REVIEWED AND CHECKED BY	SWIM APPROVAL	MAIL/DAIL APPROVAL	SHEET NO.
		SIA AB SECONDARY CANAL	DISTRICT: KISHEM PROVINCE: BADAKHSAN	BED BAR SECTIONS AND DETAIL	SWIM	MOHAMMAD AFZAL MUJAHID ENGINEER HYDRAULIC SPECIALIST	ENG. MOHAMMAD MOBIN OMID QA/QC & ENVIRONMENTAL COMPLIANCE DIRECTOR	HORTENSIA VIDAURI ACTING CHIEF OF PARTY		10 /14
						DATE:	DATE:	DATE:	DATE:	

TABLE OF SLAB CULVERT IN UNLINED PORTION

No	Station	Culvert Detail	Dimensions (M)			GPS Coordinate		Bed Elevation (m)	Remarks
			Length(m)	Height (m)	Width (m)	North	East		
1	1+480	Deck Slab Culvert	4.0	0.8	1.0	36.844	70.0931	922.24	

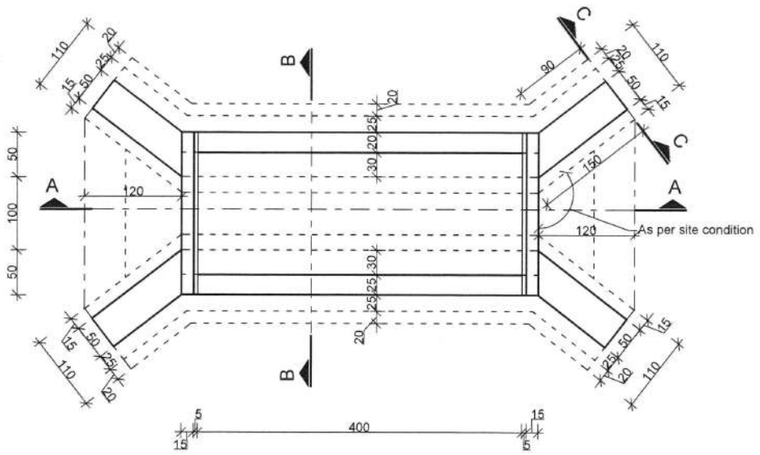

Plan of Slab Culvert
REF. SCALE: 1:75

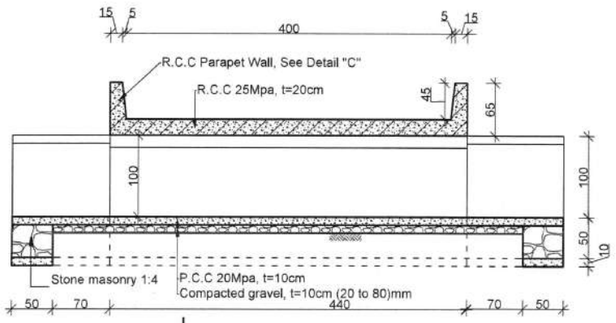

Section "A-A"
REF. SCALE: 1:75

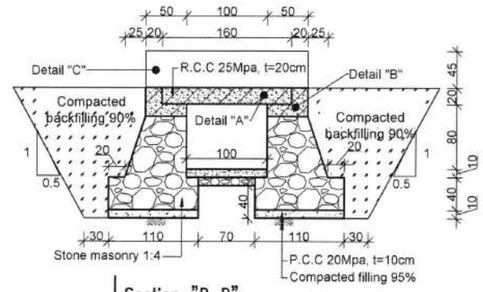

Section "B-B"
REF. SCALE: 1:75

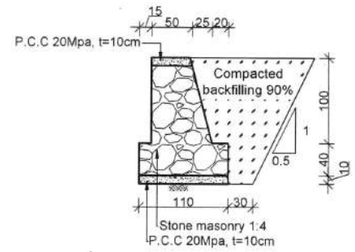

Section "C-C"
REF. SCALE: 1:75

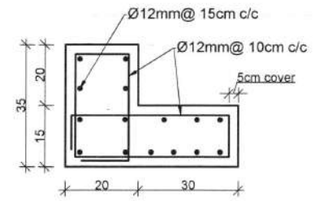

Detail "B"
REF. SCALE: 1:25

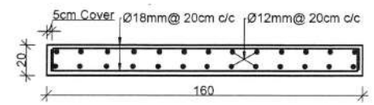

Detail "A"
REF. SCALE: 1:50

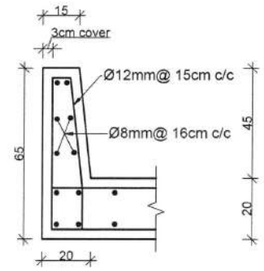

Detail "C"
REF. SCALE: 1:25

Bar Schedule (No. of bars and total bar length presented for 1m culvert)

Member	Bar Diameter	Shape Code	No. of Bars	Segment length (mm) a	b	c	d	e	Total length - *varies* (metres)
Deck	18	a b a	5	150	1500				9.00
Deck	18	a b a	5	150	1500				9.00
Deck	12	a	5	4300					21.5
Deck	12	a	5	4300					21.5
Bearing Shelf	12	c b e d	10		250	140	250	120	9
Bearing Shelf	12	d c e b	10		440	90	440	70	10.4
Bearing Shelf	12	a	7	1000					7
Parapet Wall	8	a	7	1000					7
Parapet wall	12	e a b d c	7	440	400	140	140	90	8.5

Note: No. of bars and total bar length Should be calculate as per required length

CUTTING AREA= 4sqm FILLING AREA= 6 sqm

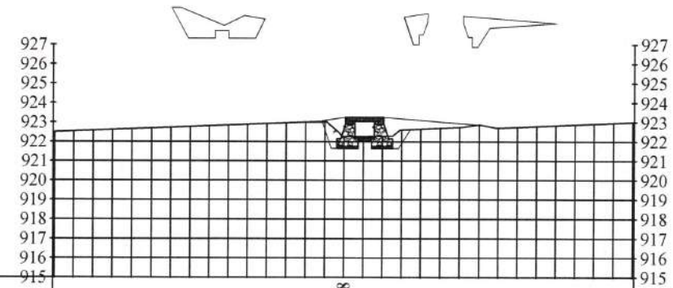

FSL	922.78
EXISTING BED ELEVATIONS	922.50, 922.53, 922.57, 922.61, 922.65, 922.69, 922.73, 922.76, 922.80, 922.84, 922.88, 922.92, 922.96, 922.99, 923.03, 922.25, 922.26, 922.27, 922.60, 922.64, 922.69, 922.73, 922.88, 922.70, 922.73, 922.78, 922.82, 922.87, 922.91, 922.95, 923.00
OFFSET	-15.00, -14.00, -13.00, -12.00, -11.00, -10.00, -9.00, -8.00, -7.00, -6.00, -5.00, -4.00, -3.00, -2.00, -1.00, 0, 1.00, 2.00, 3.00, 4.00, 5.00, 6.00, 7.00, 8.00, 9.00, 10.00, 11.00, 12.00, 13.00, 14.00, 15.00

Note:
1: All dimension are in centimeter
2: Excavation for the Foundation should be checked by the site Engineer,
3: Sand and Gravel should be clean and free from organic material
4: Compressive strength of plain cement concrete is 20MPa
5: Compressive strength of Reinforced cement concrete is 25MPa
6: Mild steel Grad 60 rebar to be used.
7: All filling should be compacted properly in layers of 15cm each as specified in drawing and technical specification
8: Stone masonry should be done by Mortar (1:4)
9: Fresh cement to be used
10: Clean water should be used(suitable for drinking)
11: Angle and length of wing walls to be adjusted by SWIM engineer as per site conditions

IFC

0 2 SEP 2019

Strengthening Watershed and Irrigation Management (SWIM)
AECOM

USAID FROM THE AMERICAN PEOPLE	STRENGTHENING WATERSHED & IRRIGATION MANAGEMENT SWIM	CANAL NAME	LOCATION	DRAWING TITLE	SURVEYED BY	DRAWING AND DESIGN BY	REVIEWED AND CHECKED BY	SWIM APPROVAL	MAIL/DAIL APPROVAL	SHEET NO.
		SIA AB SECONDARY CANAL	DISTRICT: KISHEM PROVINCE:BADAKHSHAN	DECK SLAB CULVERT PLAN, SECTIONS & DETAILS	SWIM	MOHAMMAD AFZAL MUJAHID ENGINEER HYDRAULIC SPECIALIST	ENG. MOHAMMAD MOBIN OMID QA/QC & ENVIRONMENTAL COMPLIANCE DIRECTOR	HOPPY NAZIER CHIEF OF PARTY		11/14
						DATE:	DATE:	DATE: 8/5/19	DATE:	

TABLE OF FOOT CULVERT

No	Station	Foot Culvert	Dimensions (M)			GPS Point		Remarks
			Length	High	Wide	North	East	
1	1+550	Sia Ab Canal	2.2	0.85	1.0	36.8447	70.089	

02 SEP 2013

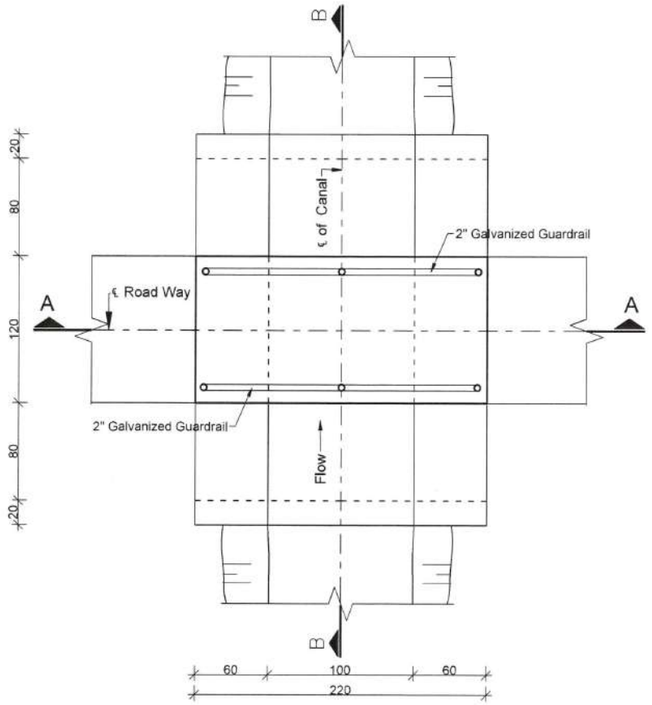

Plan of Foot Culvert
REF. SCALE: 1:50

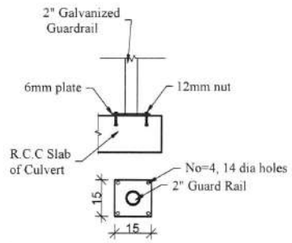

Detail of Guard Rail Bearing
REF. SCALE: 1:25

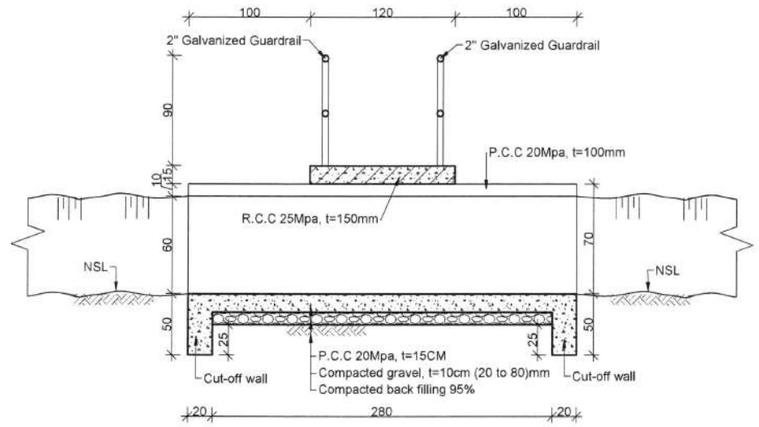

Section "B-B"
REF. SCALE: 1:50

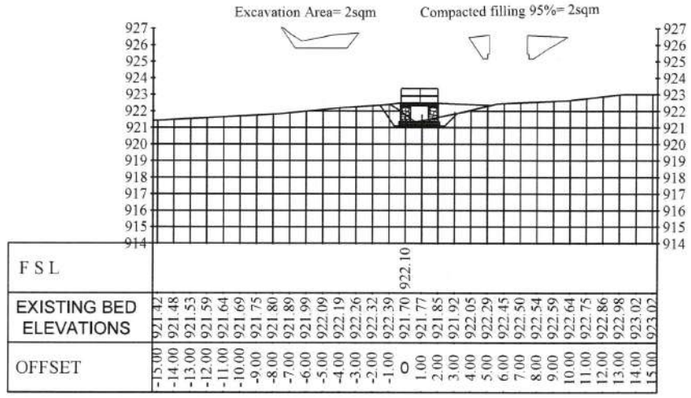

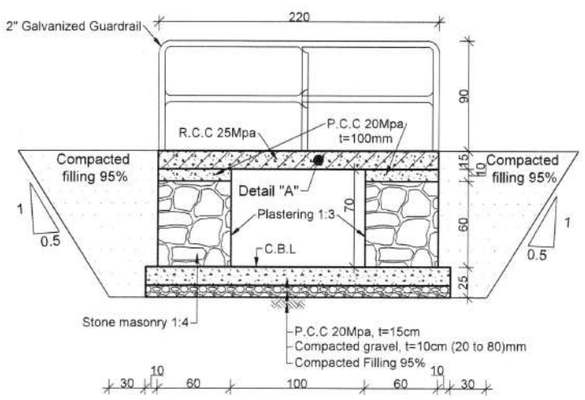

Section "A-A"
REF. SCALE: 1:50

Bar Schedule (No. of bars and total bar length presented is for 1m Foot Culvert)

Member	Bar Diameter	Shape Code	No. of Bars	Segment length (mm) a	Segment length (mm) b	Total length - ***varies*** (metres)
Slab	14	b; a a	5	100	2300	12.50
	14	a a; b	5	100	2300	12.50
	12	b; a a	5	100	1100	6.50
	12	a a; b	5	100	1100	6.50

Note: No. of bars and total bar length Should be calculate as per required length

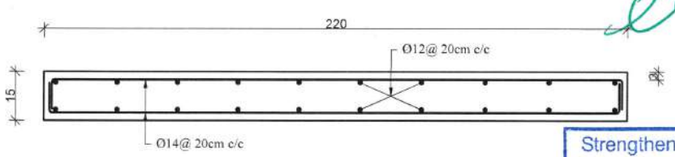

Detail "A"
REF. SCALE: 1:25

IFC

Note:

1: Unless noted otherwise, linear dimensions shown on drawing are in centimeters (cm), and elevations are in meters (m).
2: Excavation for the Foundation should be checked by the site Engineer,
3: Sand and Gravel should be clean and free from organic material
4: All filling should be compacted properly in layers of 15cm each as specified in Tech Specs
5: Stone masonry should be done by Mortar (1:4)
6: Mild steel Grad 60 rebar to be used.
8: Fresh cement to be used
9: Clean water should be used (suitable for drinking)
10: Angle and length of wing walls to be adjusted by SWIM engineer as per site conditions

Strengthening Watershed and Irrigation Management (SWIM)
AECOM

USAID FROM THE AMERICAN PEOPLE	STRENGTHENING WATERSHED & IRRIGATION MANAGEMENT SWIM	CANAL NAME	LOCATION	DRAWING TITLE	SURVEYED BY	DRAWING AND DESIGN BY	REVIEWED AND CHECKED BY	SWIM APPROVAL	MAIL/DAIL APPROVAL	
		SIA AB SECONDARY CANAL	DISTRICT: KISHEM PROVINCE:BADAKHSHAN	FOOT CULVERT PLAN, SECTIONS & DETAILS	SWIM	MOHAMMAD AFZAL MUJAHID ENGINEER HYDRAULIC SPECIALIST DATE	ENG. MOHAMMAD MOBIN OMID QA/QC & ENVIRONMENTAL COMPLIANCE DIRECTOR DATE	HORTENSIA VERAUPEL ACTING CHIEF OF PARTY DATE	DATE	SHEET NO. 12/14

Steel Slide Gate Detail For Check Structure in Unlined Portion Size (100*150)cm

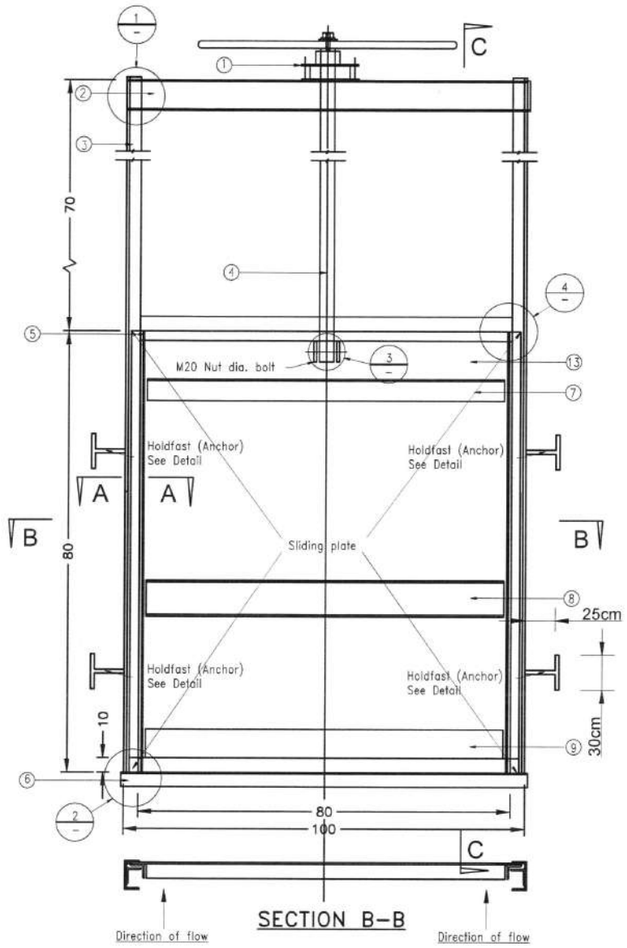

SECTION B–B

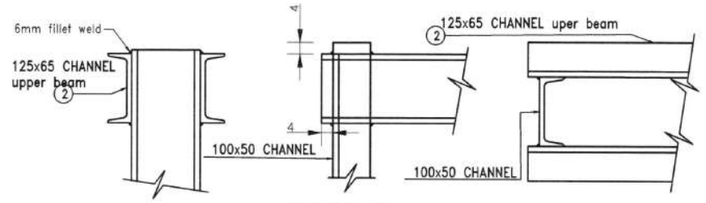

DETAIL 1:
FRAME CROSS BEAM(TOP)

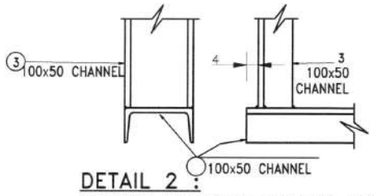

DETAIL 2 :
FRAME BOTTOM CROSS BEAM

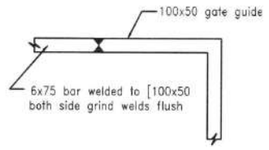

DETAIL 4:
HORIZONTAL BAR

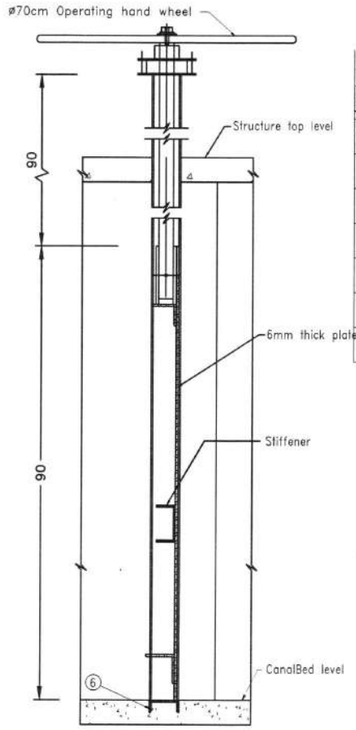

SECTION C–C

TABLE (2)
LIFTING COMPONENT

Item	Description
1	Upper&lower plate 250x250x12mm
2	Spindle
3	Bearing nut
4	Spacer
5	Four M12 bolts , nuts
6	ø700mm handle

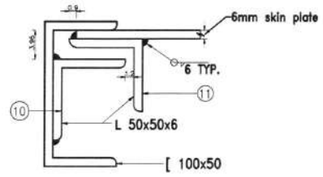

SECTION A–A

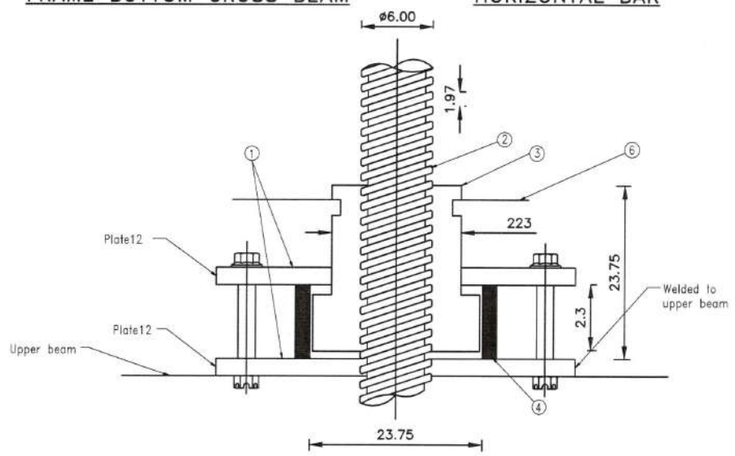

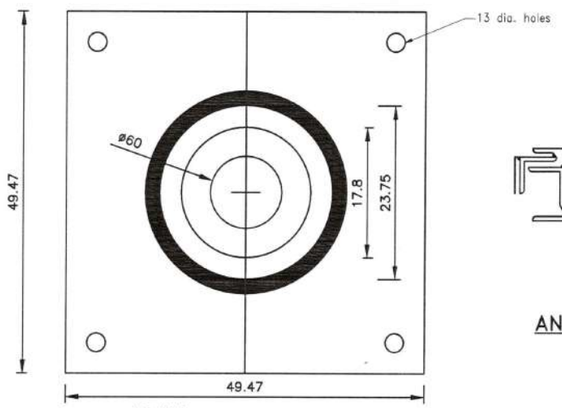

PLAN
THRUST BEARING

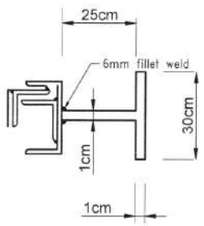

ANCHOR DETAIL

TABLE(1)
GATE COMPONENT

Item	Description
1	Thrust bearing/nut assembly
2	[125 x 65 Channel Upper beam
3	[100 x 50 Channel
4	Spindle ø 60mm
5	6 x 75 bar
6	[100 x 50 Channel (Lower beam)
7	Stiffener L 75x75x6
8	Stiffener [100x65
9	Stiffener L 100x100x6
10	L 50x 50x 6aNSLe
11	L 50x 50x 6aNSLe
12	L 50 X 50 X 6 lifting brackets
13	Plate 6 mm (see notes)

NOTE:

1.Three coats of enamel paint (one coat of red–oxide+ two coat of enamel paint).
2. Operation of the gates to be done by Mirab as per their scheduling.
3. Steel doors should be placed in a dry place to prevent from the oxidization before placement and installation.

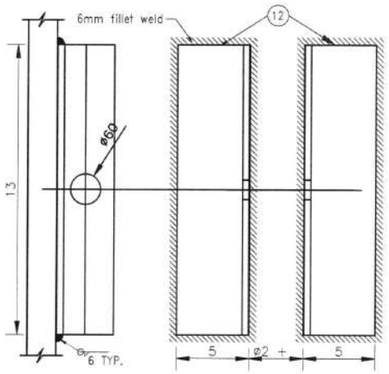

SECTION ELEVATION

DETAIL 3:
LIFTING BRACKETS

02 SEP 2019
IFC
Strengthening Watershed and Irrigation Management (SWIM)
AECOM

USAID FROM THE AMERICAN PEOPLE	STRENGTHENING WATERSHED & IRRIGATION MANAGEMENT SWIM	CANAL NAME	LOCATION	DRAWING TITLE	SURVEYED BY	DRAWING AND DESIGN BY	REVIEWED AND CHECKED BY	SWIM APPROVAL	MIAL/DAIL APPROVAL	SHEET NO.
		SIA AB SECONDAR CANAL	DISTRICT: KISHEM PROVINCE:BADAKHSHAN	STEEL SLIDE GATE FOR CHECK STRUCTURE IN UNLINED CANAL	SWIM	RAFIULLAH RAHMANI ENGINEER HYDRAULIC SPECIALIST DATE:	ENG. MOHAMMAD MOBIN OMID QA/QC & ENVIRONMENTAL COMPLIANCE DIRECTOR DATE:	HORTENSIA VIDAURI ACTING CHIEF OF PARTY DATE: 2/13/19	DATE:	13/14

Steel Slide Gate Detail For Turnout Structure
Size (80*150)cm

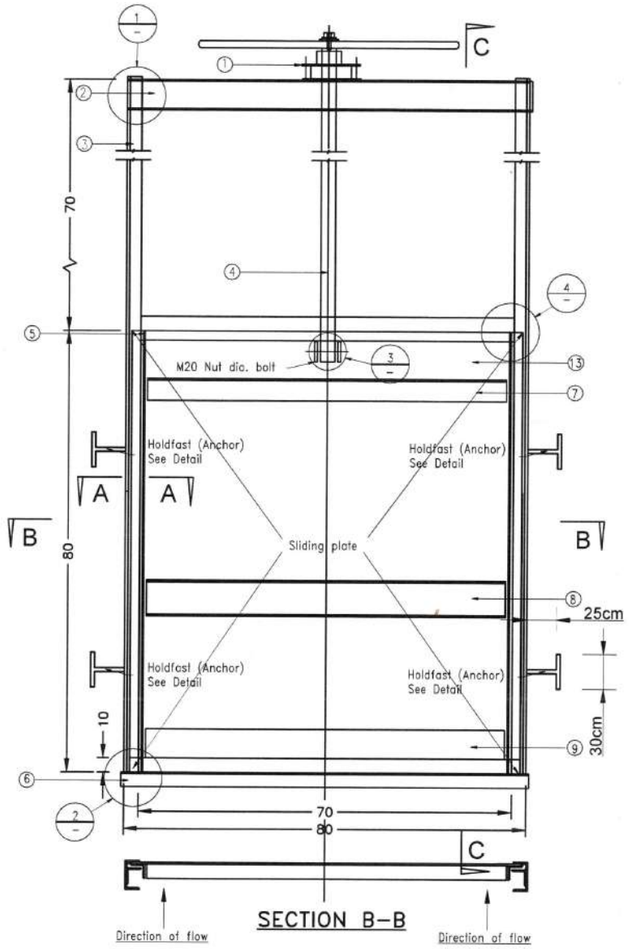

SECTION B–B

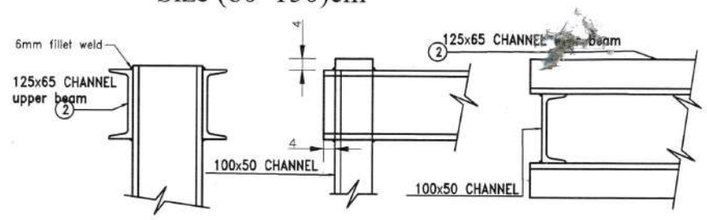

DETAIL 1:
FRAME CROSS BEAM(TOP)

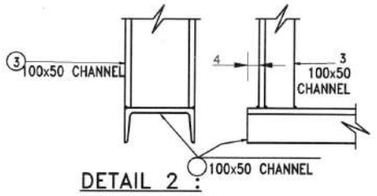

DETAIL 2 :
FRAME BOTTOM CROSS BEAM

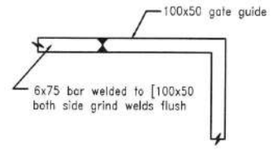

DETAIL 4:
HORIZONTAL BAR

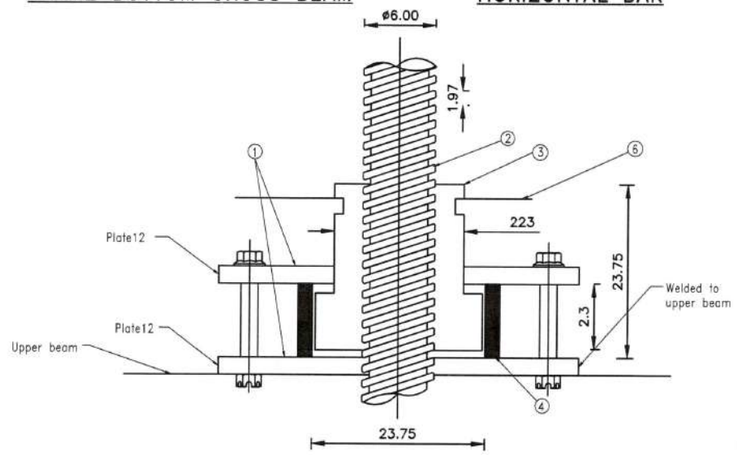

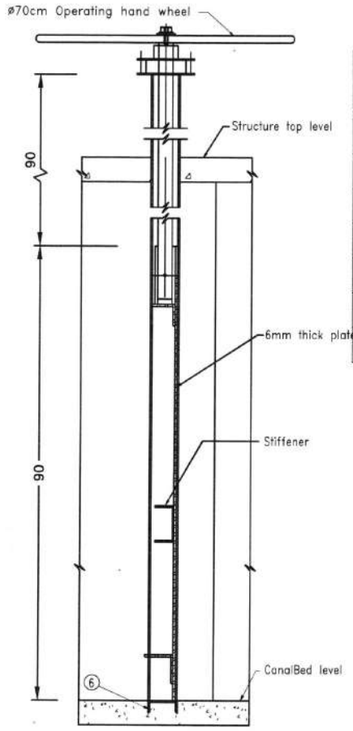

SECTION C–C

TABLE (2)
LIFTING COMPONENT

Item	Description
1	Upper&lower plate 250x250x12mm
2	Spindle
3	Bearing nut
4	Spacer
5	Four M12 bolts , nuts
6	ø700mm handle

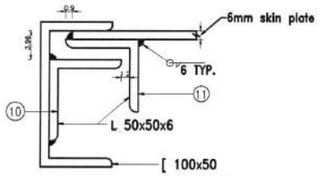

SECTION A–A

NOTE:

1.Three coats of enamel paint (one coat of red–oxide+ two coat of enamel paint).
2. Operation of the gates to be done by Mirab as per their scheduling.
3. Steel doors should be placed in a dry place to prevent from the oxidization before placement and installation.

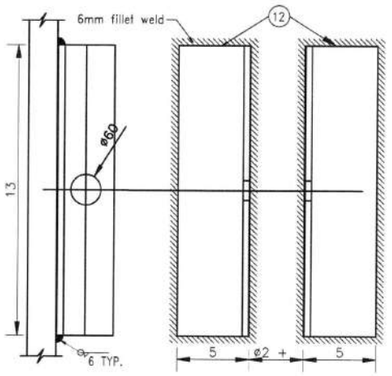

SECTION ELEVATION

DETAIL 3:
LIFTING BRACKETS

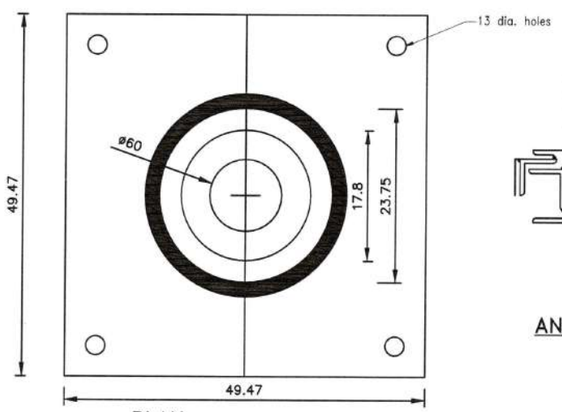

PLAN
THRUST BEARING

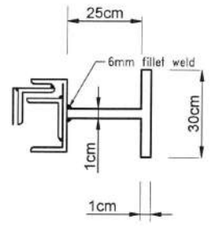

ANCHOR DETAIL

TABLE(1)
GATE COMPONENT

Item	Description
1	Thrust bearing/nut assembly
2	[125 x 65 Channel Upper beam
3	[100 x 50 Channel
4	Spindle ø 60mm
5	6 x 75 bar
6	[100 x 50 Channel (Lower beam)
7	Stiffener L 75x75x6
8	Stiffener [100x65
9	Stiffener L 100x100x6
10	L 50x 50x 6aNSLe
11	L 50x 50x 6aNSLe
12	L 50 X 50 X 6 lifting brackets
13	Plate 6 mm (see notes)

02 SEP 2013
IFC
Strengthening Watershed and Irrigation Management (SWIM)
AECOM

USAID FROM THE AMERICAN PEOPLE	STRENGTHENING WATERSHED & IRRIGATION MANAGEMENT SWIM	CANAL NAME	LOCATION	DRAWING TITLE	SURVEYED BY	DRAWING AND DESIGN BY	REVIEWED AND CHECKED BY	SWIM APPROVAL	MIAL/DAIL APPROVAL	SHEET NO. 14/14
		SIA AB SECONDAR CANAL	DISTRICT: KISHEM PROVINCE:BADAKHSHAN	STEEL SLIDE GATE FOR TURNOUT STRUCTURE	SWIM	MOHAMMAD AFZAL MUJAHID ENGINEER HYDRAULIC SPECIALIST DATE:	ENG. MOHAMMAD MOBIN OMID QA/QC & ENVIRONMENTAL COMPLIANCE DIRECTOR DATE:	HOPPY MAZIER CHIEF OF PARTY DATE: 8/5/13	DATE:	