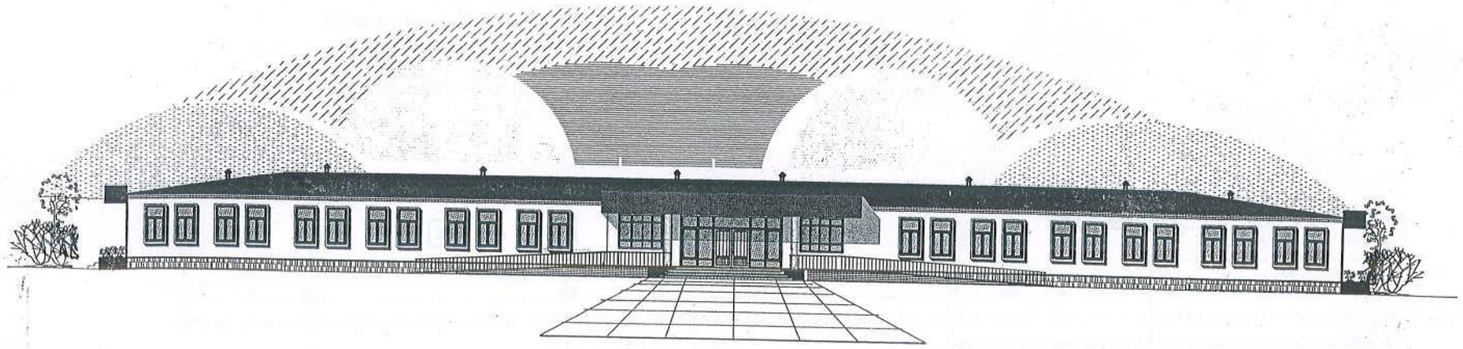

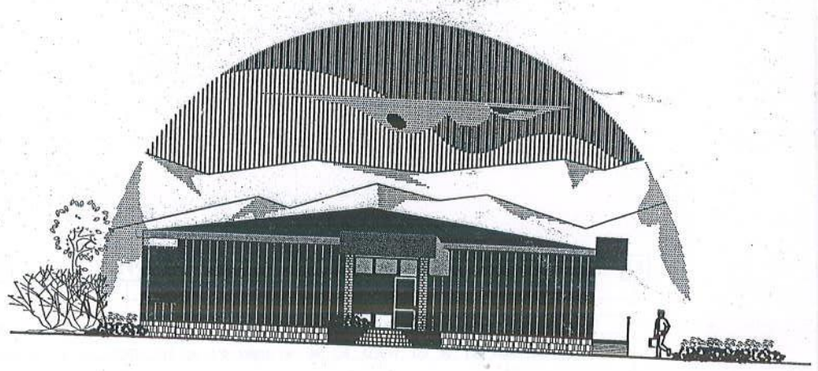

INFRASTRUCTURE DEVELOPMENT DEPARTMENT

ARCHITECTURE DRAWING LIST :

- ELEVATIONS
- GROUND FLOOR PLAN
- ROOF PLAN
- SECTION A & B
- SECTION DETAILS
- DOOR SCHEDULE
- WINDOWS SCHEDULE

-: COVER SHEET :-

10 CLASS ROOM SCHOOL BURNT BRICK IRON SHEET ROOF WITH COMPUTER LAB AND LABORATORY.

MINISTRY OF EDUCATION
DEPARTMENT OF CONSTRUCTION

STANDARD SCHOOL DESIGN
IN AFGHANISTAN

ARCHITECT-DESIGN	ARCH. FARAH	APPROVED.Doc/Moe	ENG.AB.MOMEN -RAAD-	DRAWING TYPE	ARCHITECTURAL	PROJECT NAME	
CHECKED BY	ARCH.SAID RASOOL	SCALE	AS SHOWN (A3)	CODE # S-9236	00 / 18	PROJECT TYPE AND DRAWING TITLE	10 CLASS ROOM SCHOOL BURNT BRICK IRON SHEET ROOF WITH COMPUTER LAB AND LABORATORY COVER SHEET
TECH- APPROVED BY	ENG.AB.MATIN MAQOL	DATE	December 2014				

Technical specification

1— Class room (6x8)m2
2— Laboratory (6x8)m2
3— Computer Lab (6x8)m2
4— Staff room (6x3)m2
5— Department (6x3)m2
6— Teacher room (6x3)m2
7— Information (6x3)m2
8— Stair (6.4x6)m2
9— Hall (6.4x2.83)m2
10— Corridor (2.5x64)m2

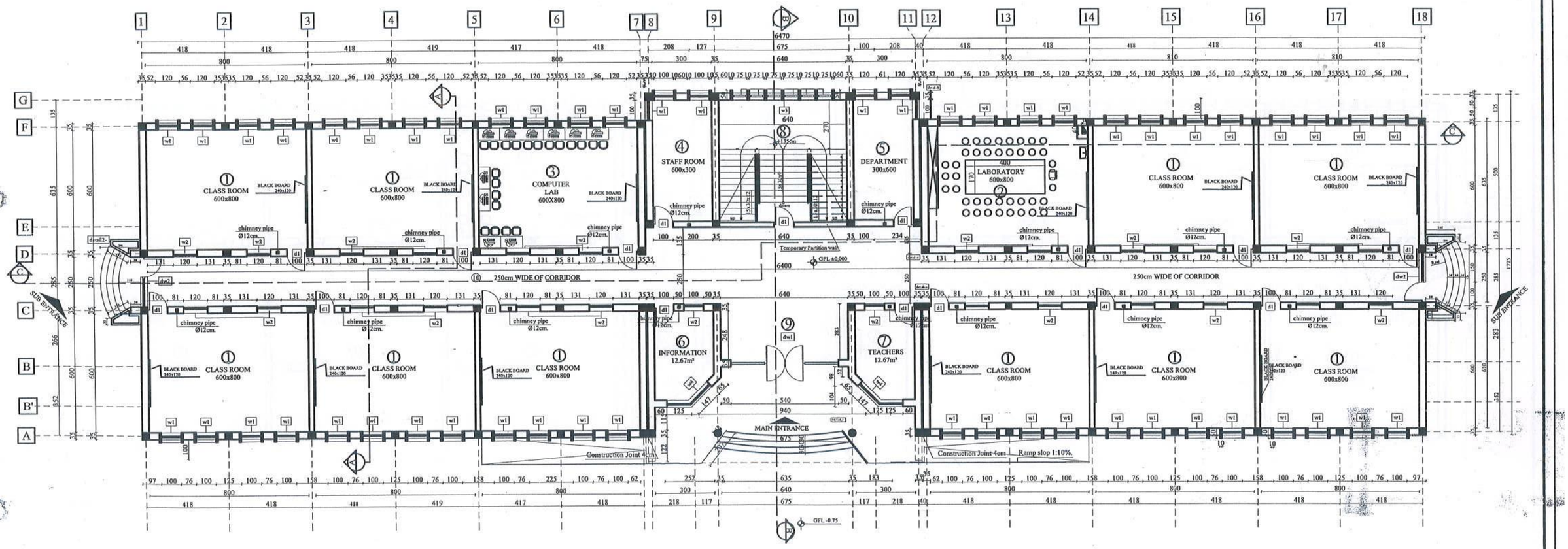

MINISTRY OF EDUCATION
DEPARTMENT OF CONSTRUCTION

STANDARD SCHOOL DESIGN
IN AFGHANISTAN

ARCHITECT/DESIGN	ARCH. FARAH	APPROVED:Doc/Moe	ENG.AB.MOMEN -RAAD-	DRAWING TYPE	ARCHITECTURAL
CHECKED BY	ARCH.SAID RASOOL	SCALE	AS SHOWN (A3)	CODE # S-0256	01 / 19
TECH- APPROVED BY	ENG.AB.MATIN MAQOL	DATE	December 2014		

PROJECT NAME

PROJECT TYPE AND DRAWING TITLE

10 CLASS ROOM SCHOOL BURNT BRICK IRON SHEET ROOF WITH COMPUTER LAB AND LABORATORY
GROUND FLOOR PLAN

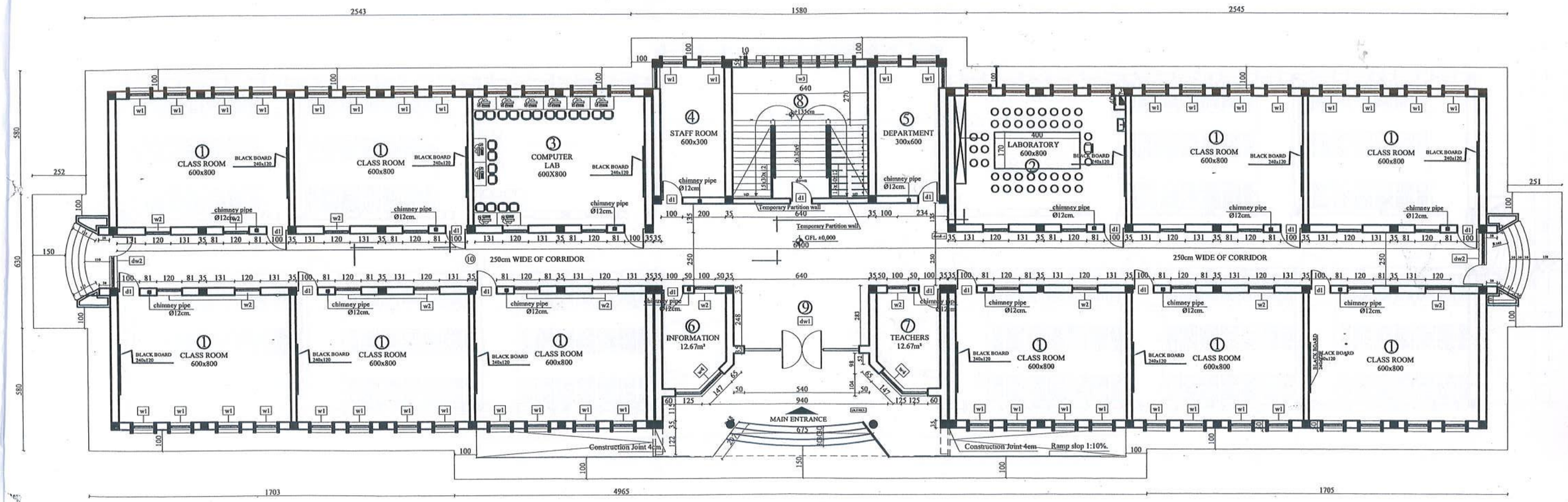

MINISTRY OF EDUCATION DEPARTMENT OF CONSTRUCTION	STANDARD SCHOOL DESIGN IN AFGHANISTAN	ARCHITECT/DESIGN	ARCH. FARAH	APPROVED.Doc/Moe	ENG.AB.MOMEN -RAAD-	DRAWING TYPE	ARCHITECTURAL
		CHECKED BY	ARCH.SAID RASOOL	SCALE	AS SHOWN (A1)	CODE # S-0126	02 / 19
		TECH- APPROVED BY	ENG.AB.MATIN MAQOL	DATE	December 2014		

PROJECT NAME

PROJECT TYPE AND DRAWING TITLE

10 CLASS ROOM SCHOOL BURNT BRICK IRON SHEET ROOF WITH COMPUTER LAB AND LABORATORY PAVEMENT PLAN

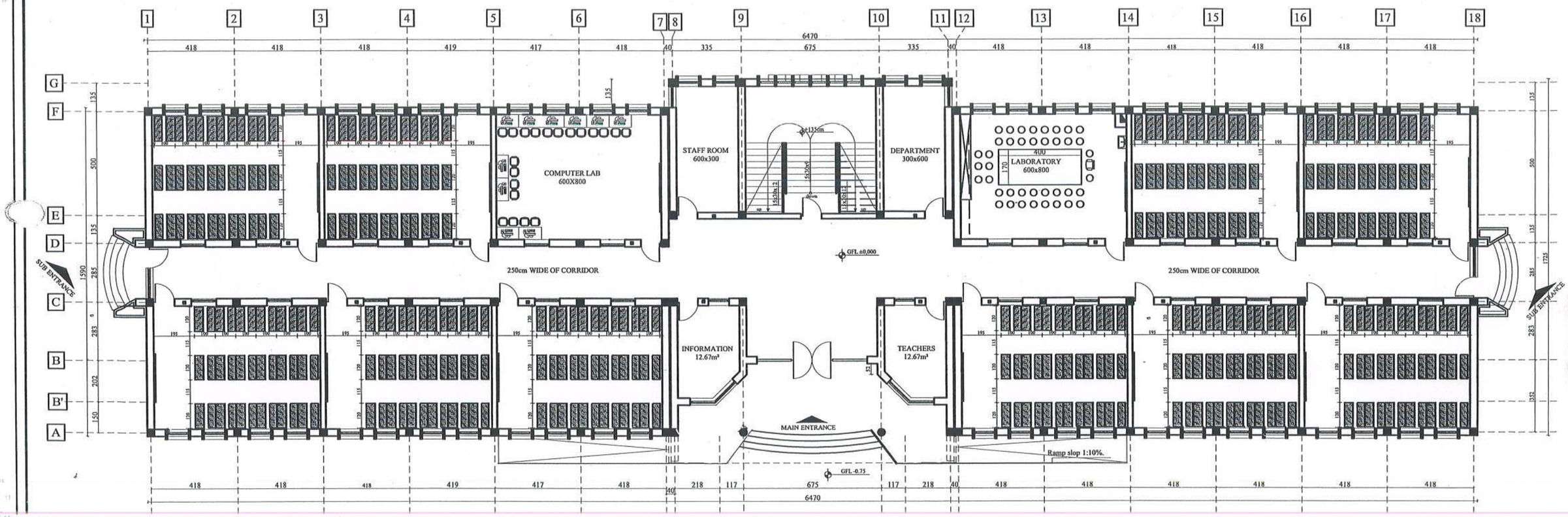

MINISTRY OF EDUCATION
DEPARTMENT OF CONSTRUCTION

STANDARD SCHOOL DESIGN
IN AFGHANISTAN

ARCHITECT/DESIGN	ARCH. FARAH	APPROVED/Doc/Moe	ENG.AB.MOMEN -RAAD-	DRAWING TYPE	ARCHITECTURAL
CHECKED BY	ARCH.SAID RASOOL	SCALE	AS SHOWN (A3)	CODE # S-0356	03 / 19
TECH- APPROVED BY	ENG.AB.MATIN MAQOL	DATE	December 2014		

PROJECT NAME

PROJECT TYPE AND DRAWING TITLE

10 CLASS ROOM SCHOOL BURNT BRICK IRON SHEET ROOF WITH COMPUTER LAB AND LABORATORY FURNITURE PLAN

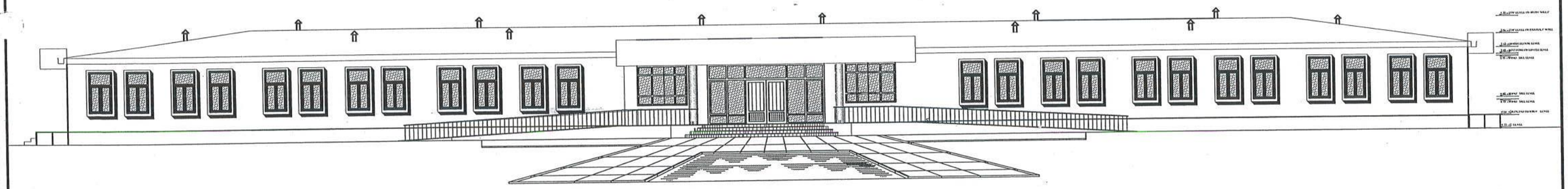

MINISTRY OF EDUCATION
DEPARTMENT OF CONSTRUCTION

STANDARD SCHOOL DESIGN
IN AFGHANISTAN

ARCHITECT/DESIGN	ARCH. FARAH	APPROVED.Doc/Moe	ENG.AB.MOMEN -RAAD	DRAWING TYPE	ARCHITECTURAL	PROJECT NAME	
CHECKED BY	ARCH.SAID RASOOL	SCALE	AS SHOWN (A3)	CODE # S-0236	04 / 19	PROJECT TYPE AND DRAWING TITLE	18 CLASS ROOM SCHOOL BURNT BRICK IRON SHEET ROOF WITH COMPUTER LAB AND LABORATORY FRONT ELEVATION
TECH- APPROVED BY	ENG.AB.MATIN MAQOL	DATE	December 2014				

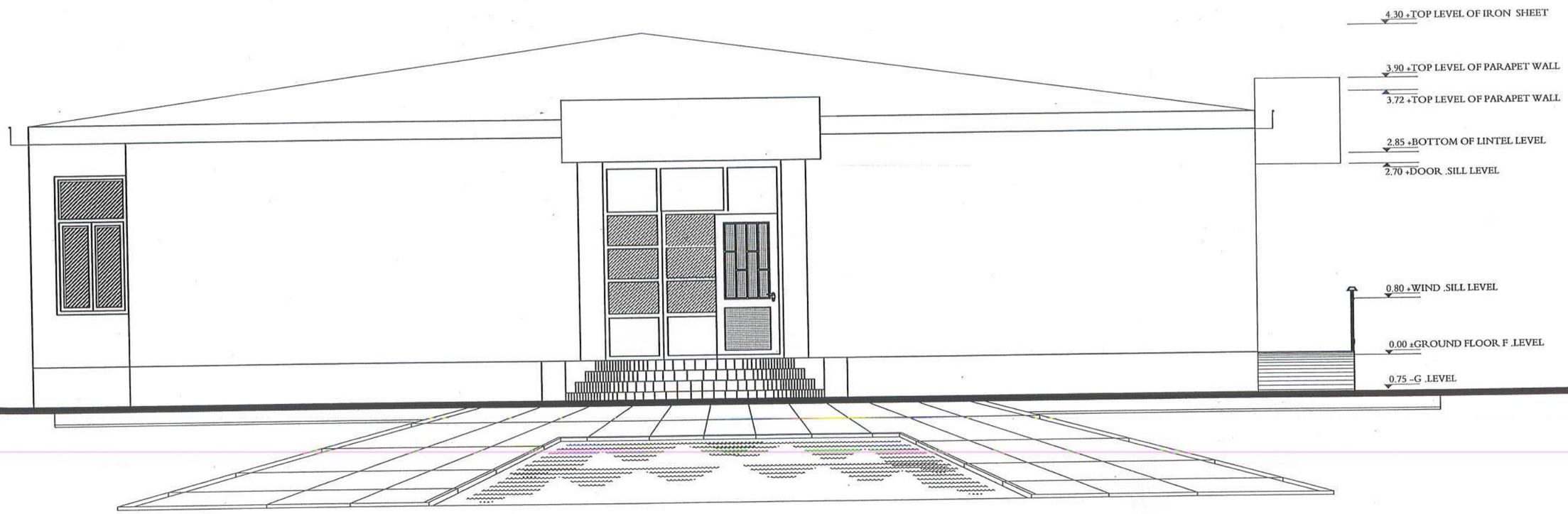

MINISTRY OF EDUCATION
DEPARTMENT OF CONSTRUCTION

STANDARD SCHOOL DESIGN
IN AFGHANISTAN

ARCHITECT/DESIGN	ARCH. FARAH	APPROVED/Doc/Moe	ENG.AB.MOMEN -RAAD-	DRAWING TYPE	ARCHITECTURAL	PROJECT NAME
CHECKED BY	ARCH.SAID RASOOL	SCALE	AS SHOWN (A1)	CODE# S-0124	05 / 19	PROJECT TYPE AND DRAWING TITLE
TECH- APPROVED BY	ENG.AB.MATIN MAQOL	DATE	December 2014			10 CLASS ROOM SCHOOL BURNT BRICK IRON SHEET ROOF WITH COMPUTER LAB AND LABORATORY SIDE ELEVATION

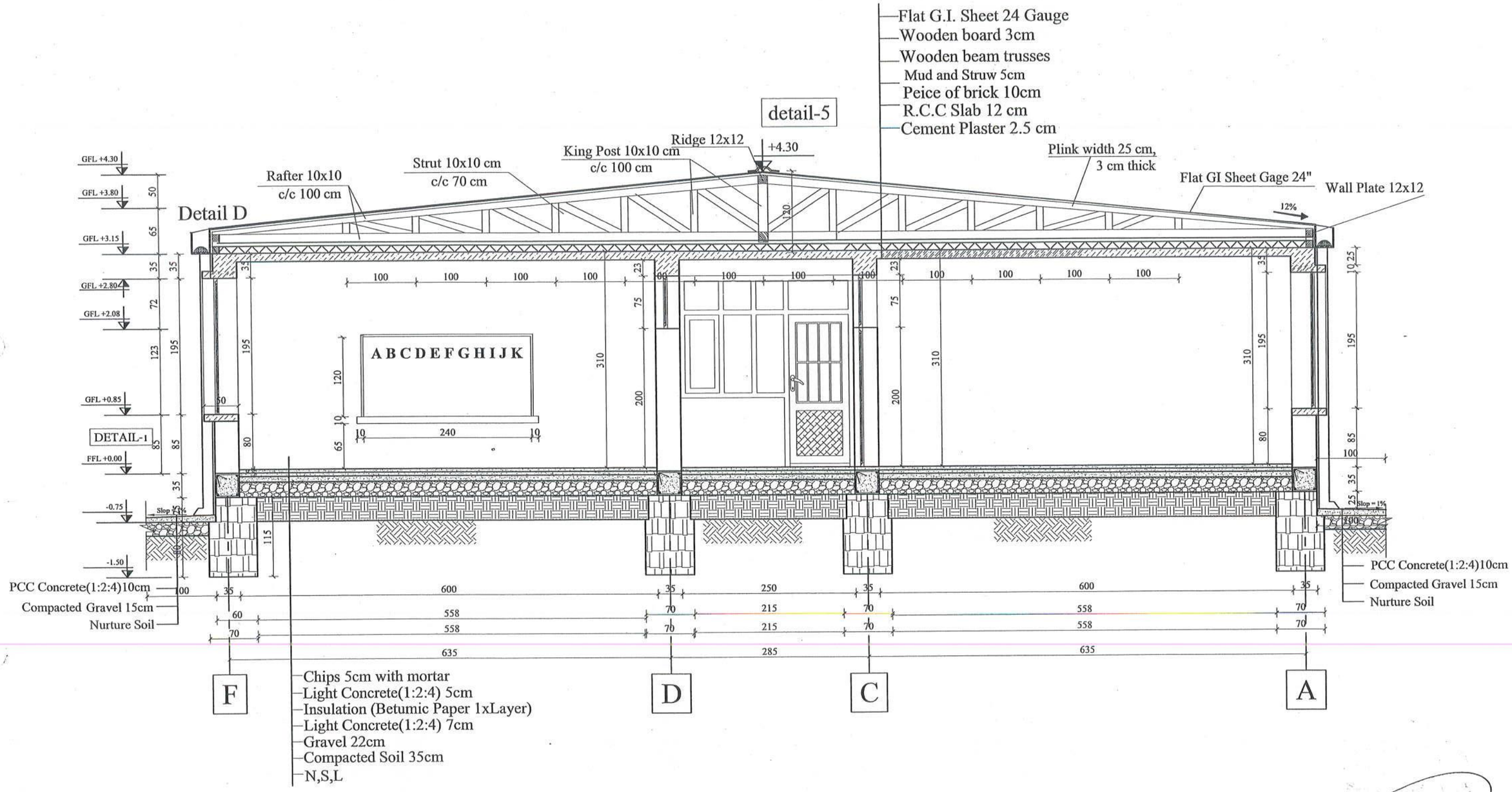

MINISTRY OF EDUCATION DEPARTMENT OF CONSTRUCTION	STANDARD SCHOOL DESIGN IN AFGHANISTAN	ARCHITECT/DESIGN	ARCH. FARAH	APPROVED/Doc/Moe	ENG.AB.MOMEN-KAAD	DRAWING TYPE	ARCHITECTURAL	PROJECT NAME
		CHECKED BY	ARCH.SAID RASOOL	SCALE	AS SHOWN (A1)	CODE # S-0036	06 / 19	PROJECT TYPE AND DRAWING TITLE
		TECH- APPROVED BY	ENG.AB.MATIN MAQOL	DATE	December 2014			10 CLASS ROOM SCHOOL BURNT BRICK IRON SHEET ROOF WITH COMPUTER LAB AND LABORATORY SHORT SECTION A-A

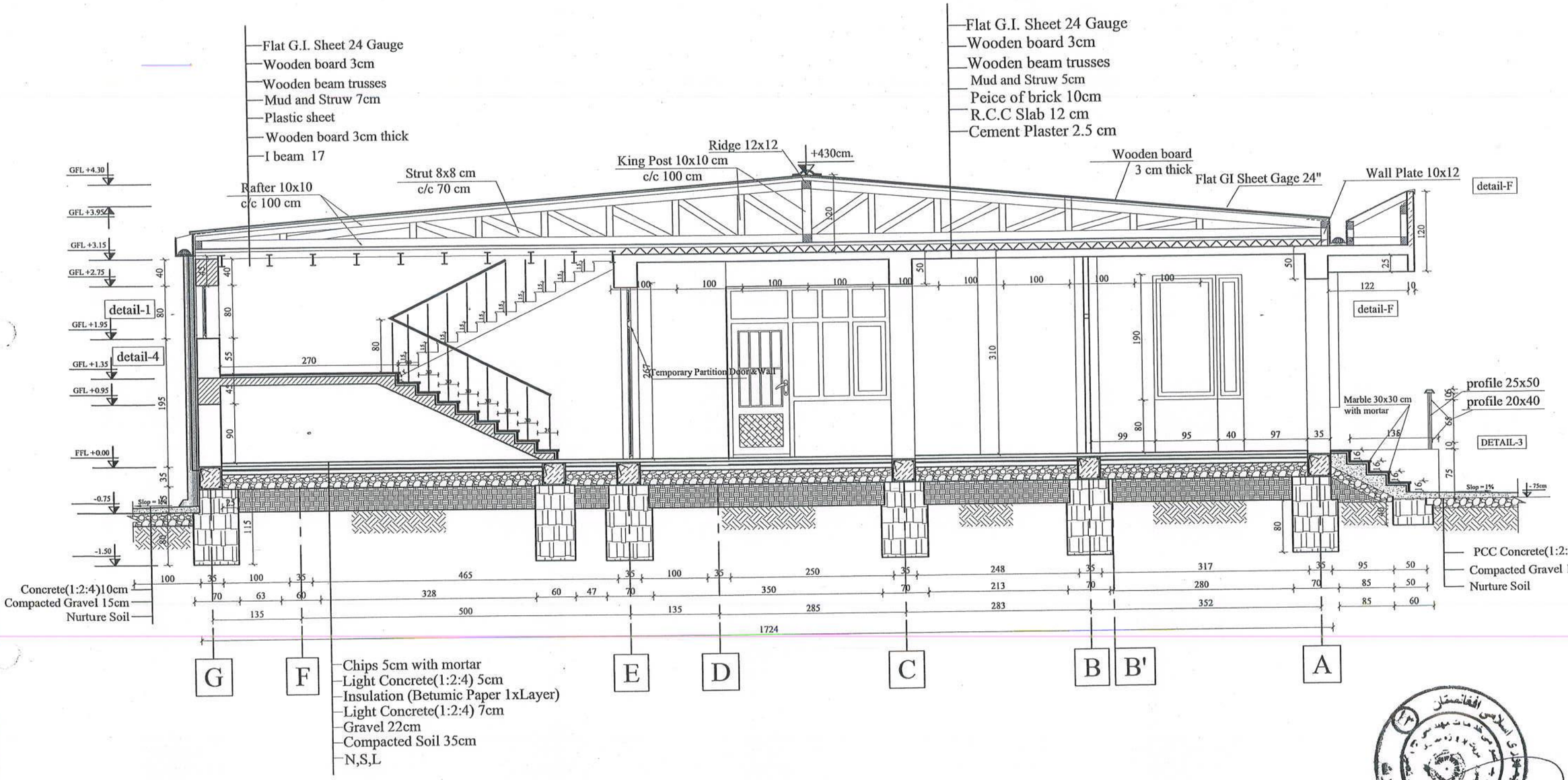

MINISTRY OF EDUCATION
DEPARTMENT OF CONSTRUCTION

STANDARD SCHOOL DESIGN
IN AFGHANISTAN

ARCHITECT/DESIGN	ARCH. FARAH	APPROVED: Doc/Moe	ENG.AB.MOMEN - RAAD	DRAWING TYPE	ARCHITECTURAL
CHECKED BY	ARCH.SAID RASOOL	SCALE	AS SHOWN (A3)	CODE# S-0256	07 / 19
TECH- APPROVED BY	ENG.AB.MATIN MAQOL	DATE	December 2014		

PROJECT NAME

PROJECT TYPE AND DRAWING TITLE

10 CLASS ROOM SCHOOL BURNT BRICK IRON SHEET ROOF WITH COMPUTER LAB AND LABORATORY
SECTION B-B

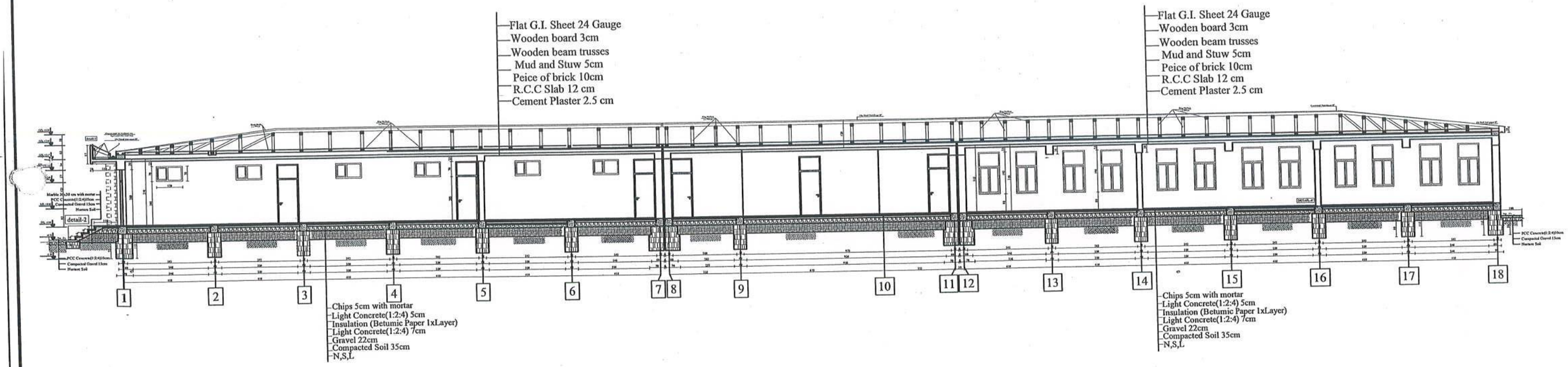

MINISTRY OF EDUCATION
DEPARTMENT OF CONSTRUCTION

STANDARD SCHOOL DESIGN
IN AFGHANISTAN

ARCHITECT/DESIGN	ARCH. FARAH	APPROVED. Doc/Moe	ENG.AB.MOMEN -RAAD	DRAWING TYPE	ARCHITECTURAL	PROJECT NAME
CHECKED BY	ARCH.SAID RASOOL	SCALE	AS SHOWN (A3)	CODE# S-0256	08 / 19	PROJECT TYPE AND DRAWING TITLE
TECH- APPROVED BY	ENG.AB.MATIN MAQOL	DATE	December 2014			18 CLASS ROOM SCHOOL BURNT BRICK IRON SHEET ROOF WITH COMPUTER LAB AND LABORATORY LONG SECTION C-C

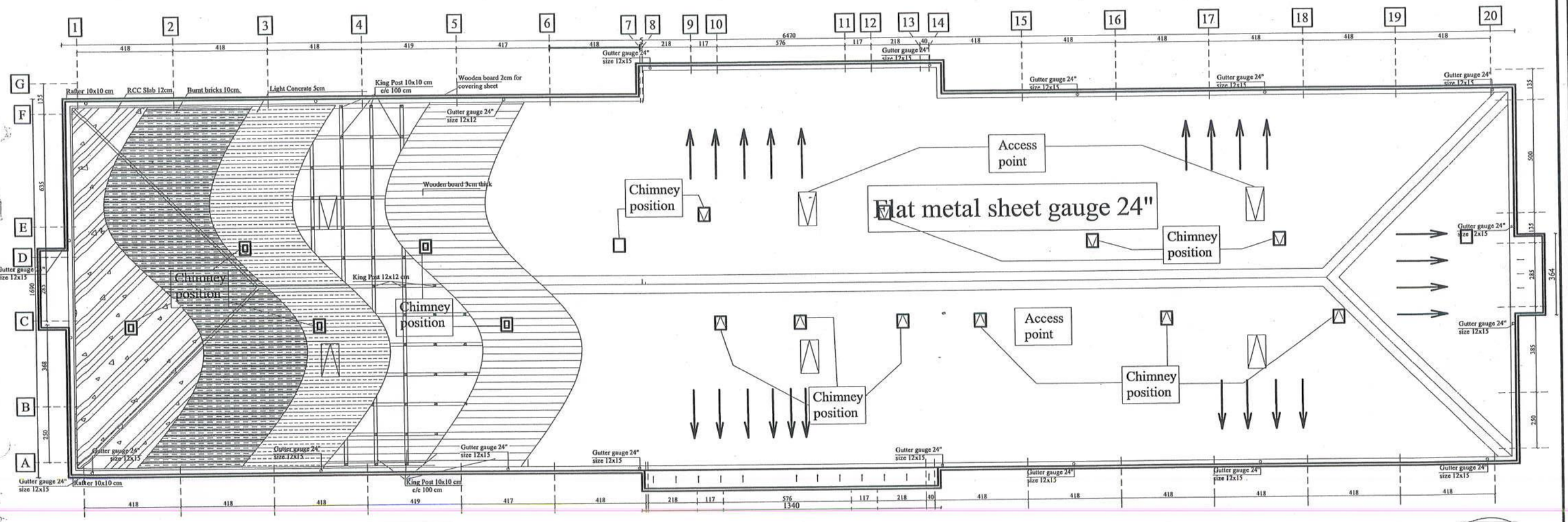

MINISTRY OF EDUCATION DEPARTMENT OF CONSTRUCTION	STANDARD SCHOOL DESIGN IN AFGHANISTAN	ARCHITECT/DESIGN	ARCH. FARAH	APPROVED/Doc/Moe	ENG.AB.MOMEN -RAAD	DRAWING TYPE	ARCHITECTURAL
		CHECKED BY	ARCH.SAID RASOOL	SCALE	AS SHOWN (A3)	CODE # S-0226	09 / 19
		TECH- APPROVED BY	ENG.AB.MATIN MAQOL	DATE	December 2014		

PROJECT NAME

PROJECT TYPE AND DRAWING TITLE

18 CLASS ROOM SCHOOL BURNT BRICK IRON SHEET ROOF WITH COMPUTER LAB AND LABORATORY TRUSS PLAN

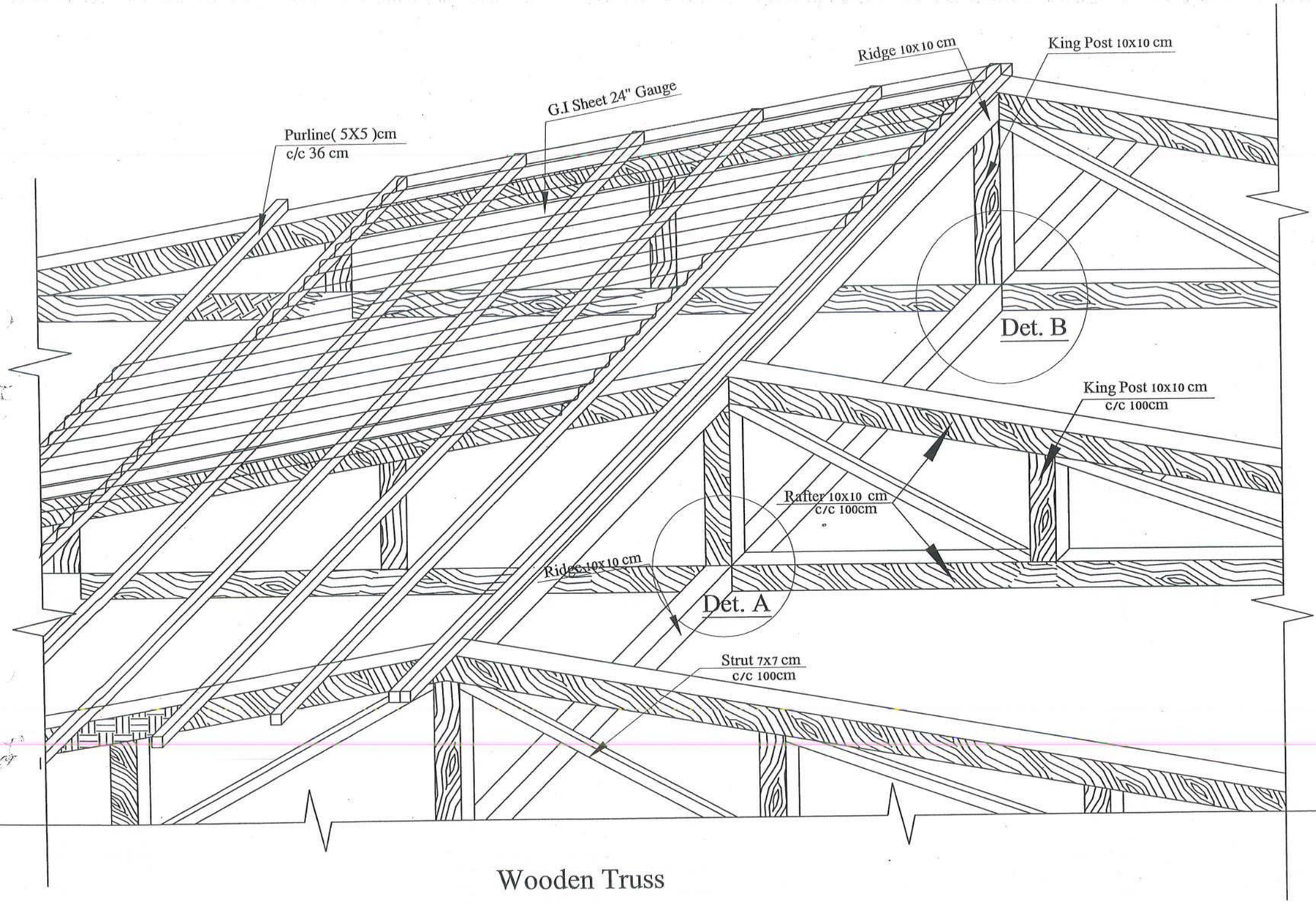

Wooden Truss

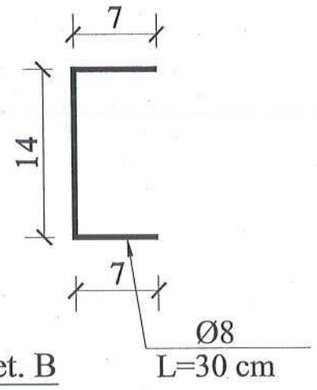

Det. B

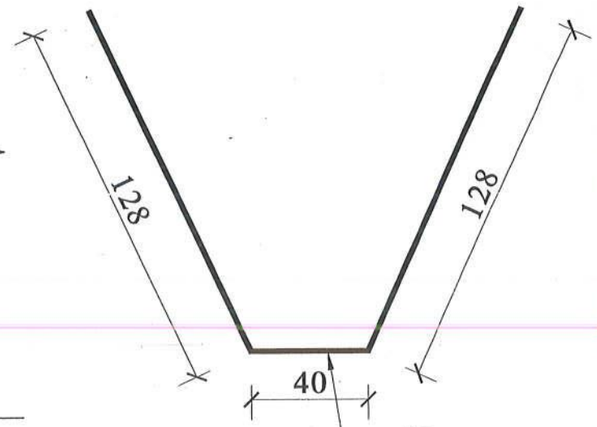

Det. A

MINISTRY OF EDUCATION DEPARTMENT OF CONSTRUCTION	STANDARD SCHOOL DESIGN IN AFGHANISTAN	ARCHITECT/DESIGN	ARCH. FARAH	APPROVED:Doc/Moe	ENG.AB.MOMEN -RAAD-	DRAWING TYPE	ARCHITECTURAL
		CHECKED BY	ARCH.SAID RASOOL	SCALE	AS SHOWN (A3)	CODE.# S-0256	09' / 19
		TECH- APPROVED BY	ENG.AB.MATIN MAQOL	DATE	December 2014		

PROJECT NAME

PROJECT TYPE AND DRAWING TITLE

10 CLASS ROOM SCHOOL BURNT BRICK IRON SHEET ROOF WITH COMPUTER LAB AND LABORATORY

Detail of Wooden Truss

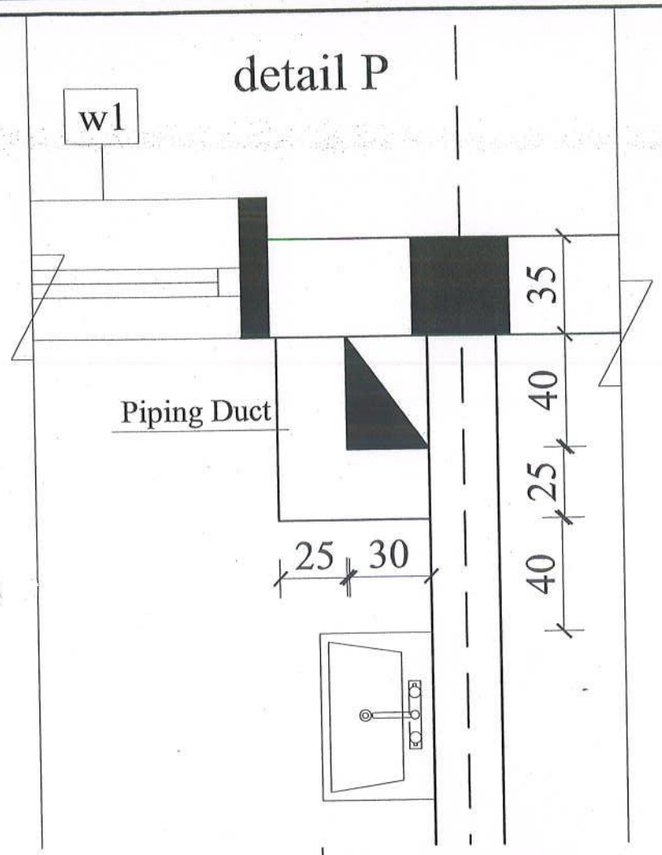

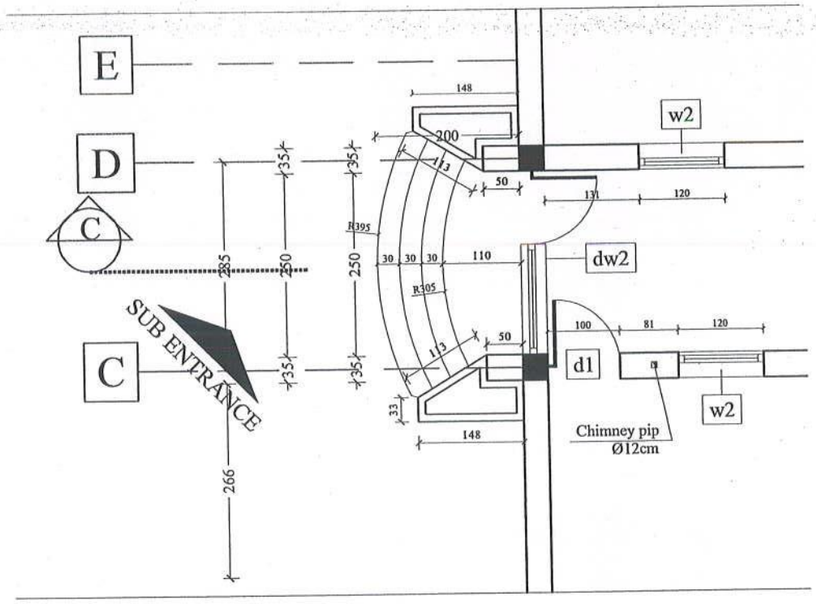

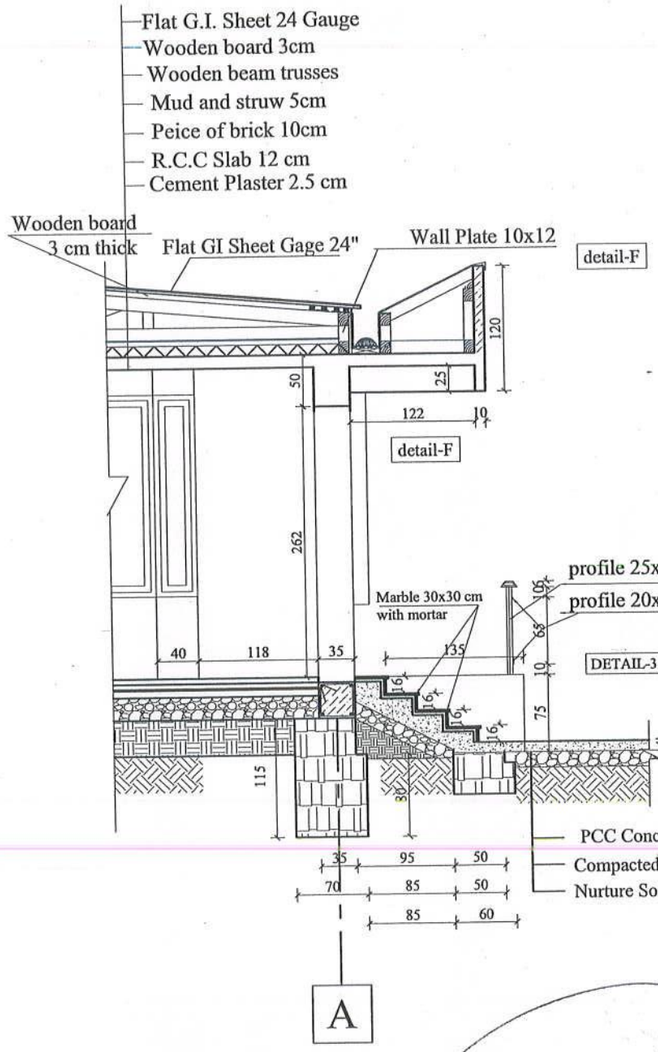

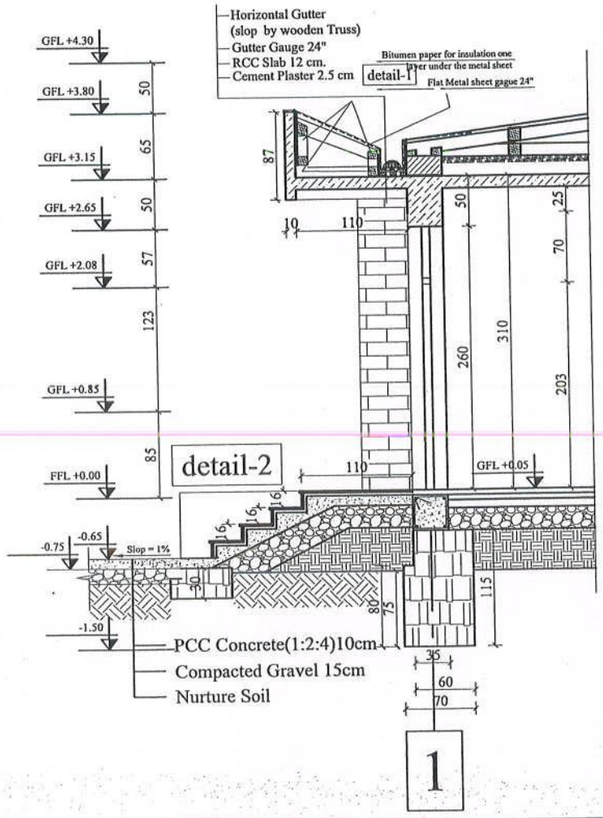

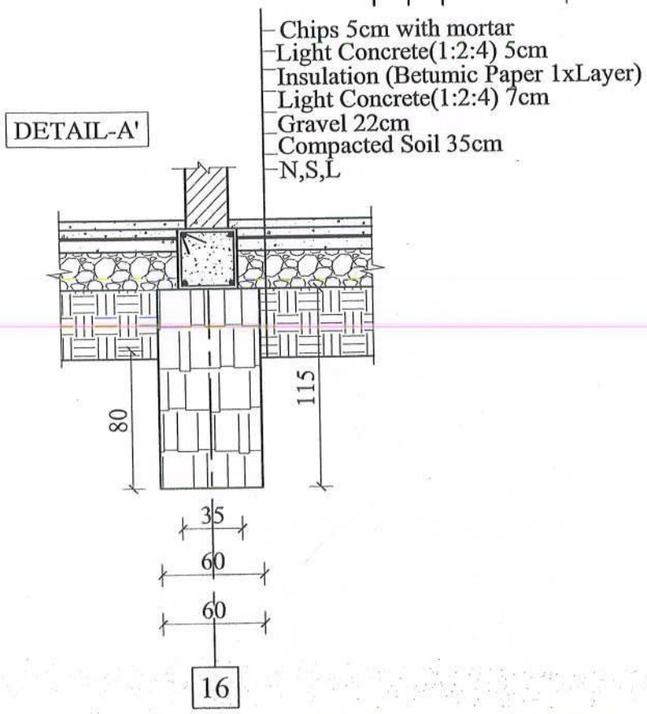

MINISTRY OF EDUCATION DEPARTMENT OF CONSTRUCTION	STANDARD SCHOOL DESIGN IN AFGHANISTAN	ARCHITECT/DESIGN	ARCH. FARAH	APPROVED Doc/Moe	ENG.AB.MOMEN "RAAD"	DRAWING TYPE	ARCHITECTURAL
		CHECKED BY	ARCH.SAID RASOOL	SCALE	AS SHOWN (A3)	CODE # S-9256	10 / 19
		TECH- APPROVED BY	ENG.AB.MATIN MAQOL	DATE	December 2014		

PROJECT NAME

PROJECT TYPE AND DRAWING TITLE

18 CLASS ROOM SCHOOL BURNT BRICK IRON SHEET ROOF WITH COMPUTER LAB AND LABORATORY DETAILS

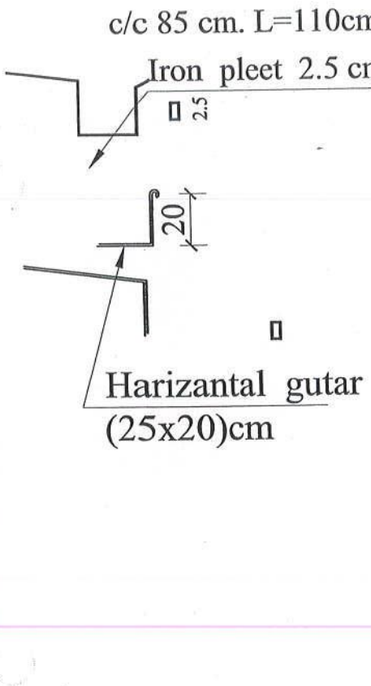

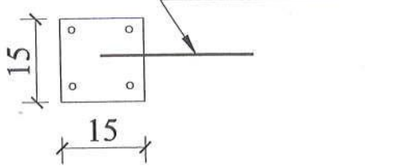

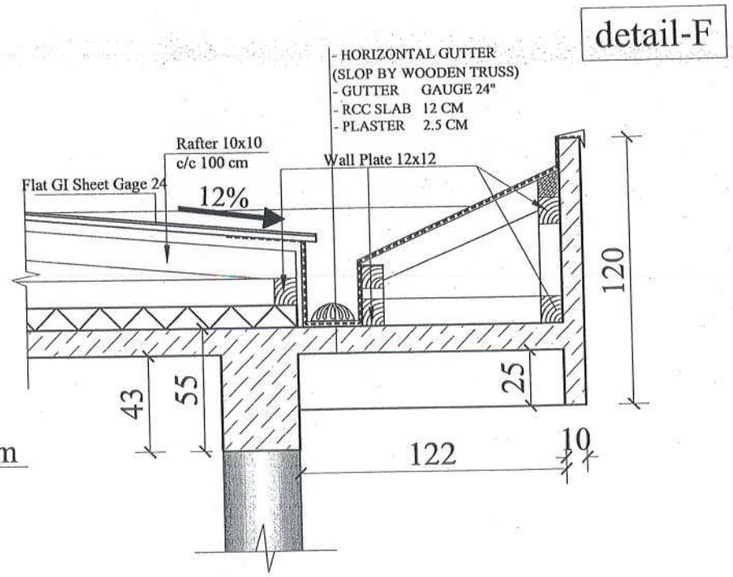

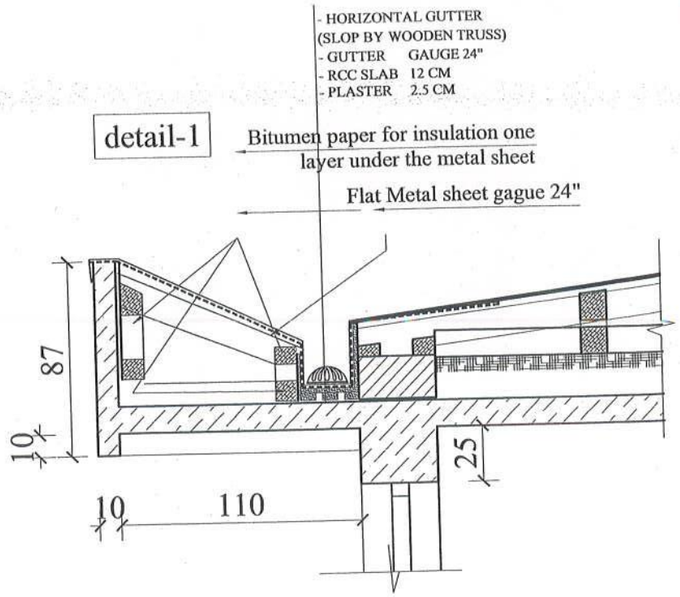

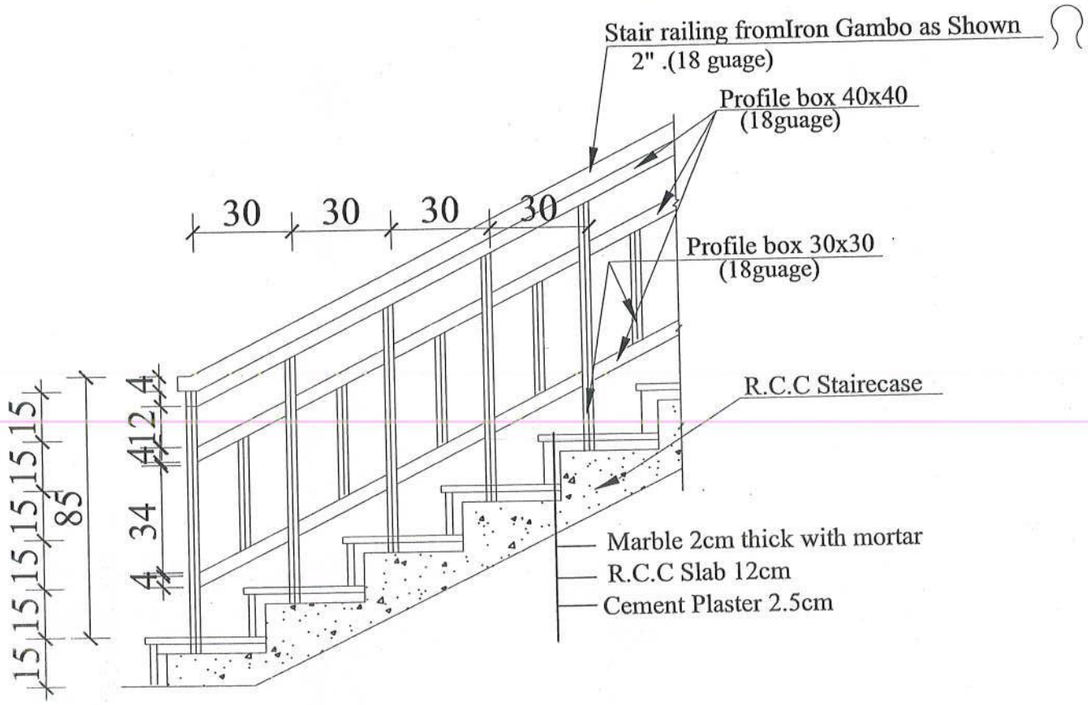

MINISTRY OF EDUCATION DEPARTMENT OF CONSTRUCTION	STANDARD SCHOOL DESIGN IN AFGHANISTAN	ARCHITECT/DESIGN	ARCH. FARAH	APPROVED.Doc/Moe	ENG.AB.MOMEN -RAAD	DRAWING TYPE	ARCHITECTURAL	PROJECT NAME
		CHECKED BY	ARCH.SAID RASOOL	SCALE	AS SHOWN(A1)	CODE # S-0236	11 / 19	PROJECT TYPE AND DRAWING TITLE
		TECH- APPROVED BY	ENG.AB.MATIN MAQOL	DATE	December 2014			10 CLASS ROOM SCHOOL BURNT BRICK IRON SHEET ROOF WITH COMPUTER LAB AND LABORATORY DETAILS

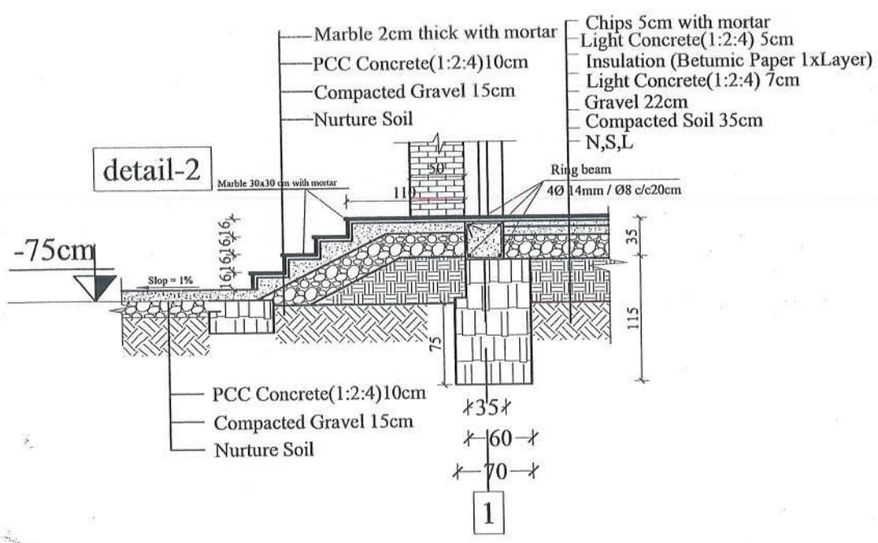

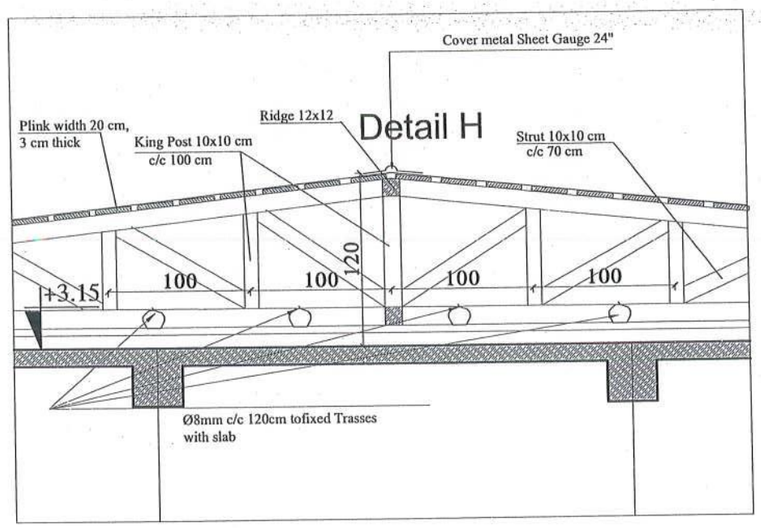

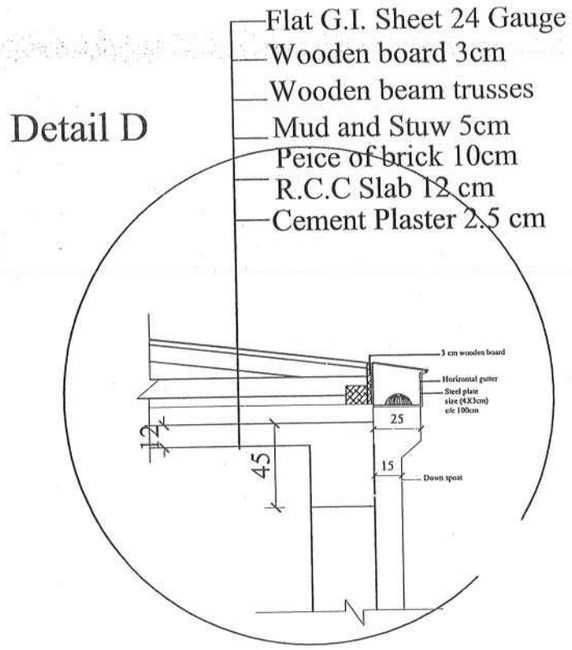

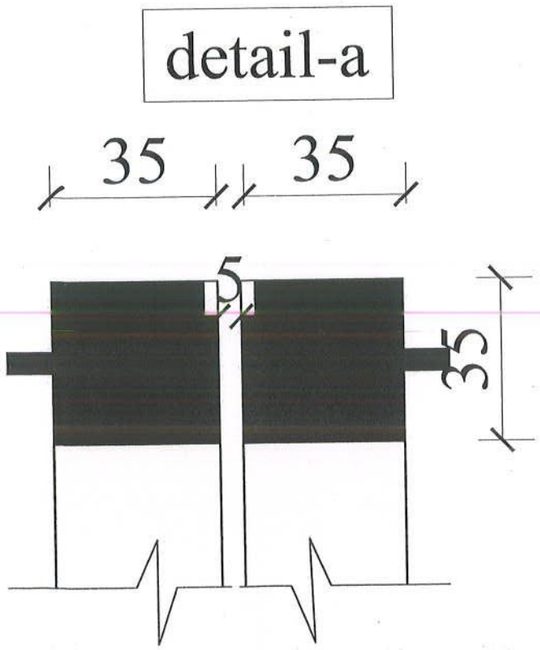

DETAIL A

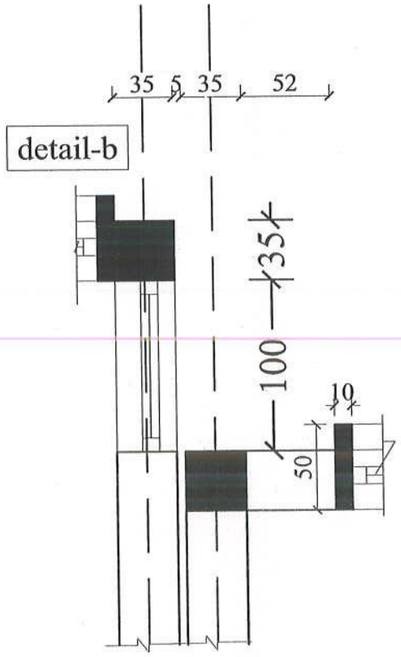

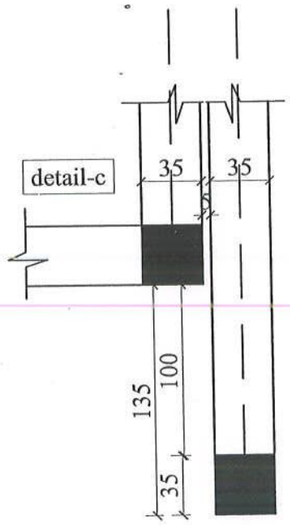

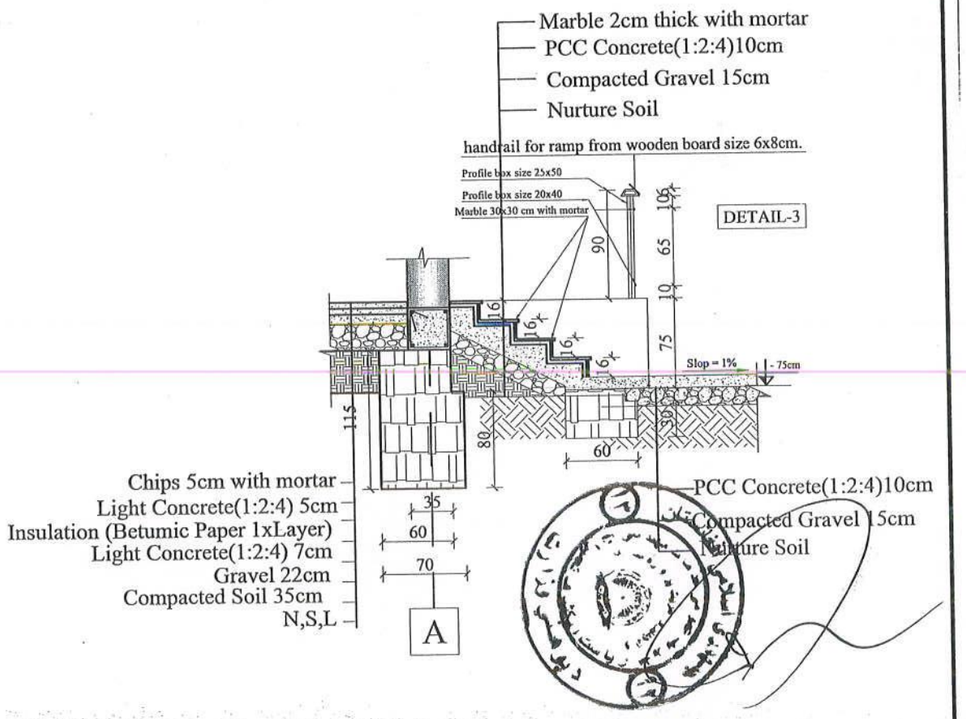

MINISTRY OF EDUCATION DEPARTMENT OF CONSTRUCTION	STANDARD SCHOOL DESIGN IN AFGHANISTAN	ARCHITECT-DESIGN	ARCH. FARAH	APPROVED: Doc/Moe	ENG.AB.MOMEN -RAAD-	DRAWING TYPE	ARCHITECTURAL
		CHECKED BY	ARCH.SAID RASOOL	SCALE	AS SHOWN (A1)	CODE # S-9236	12 / 19
		TECH- APPROVED BY	ENG.AB.MATIN MAQOL	DATE	December 2014		

PROJECT NAME

PROJECT TYPE AND DRAWING TITLE

18 CLASS ROOM SCHOOL BURNT BRICK IRON SHEET ROOF WITH COMPUTER LAB AND LABORATORY

DETAILS

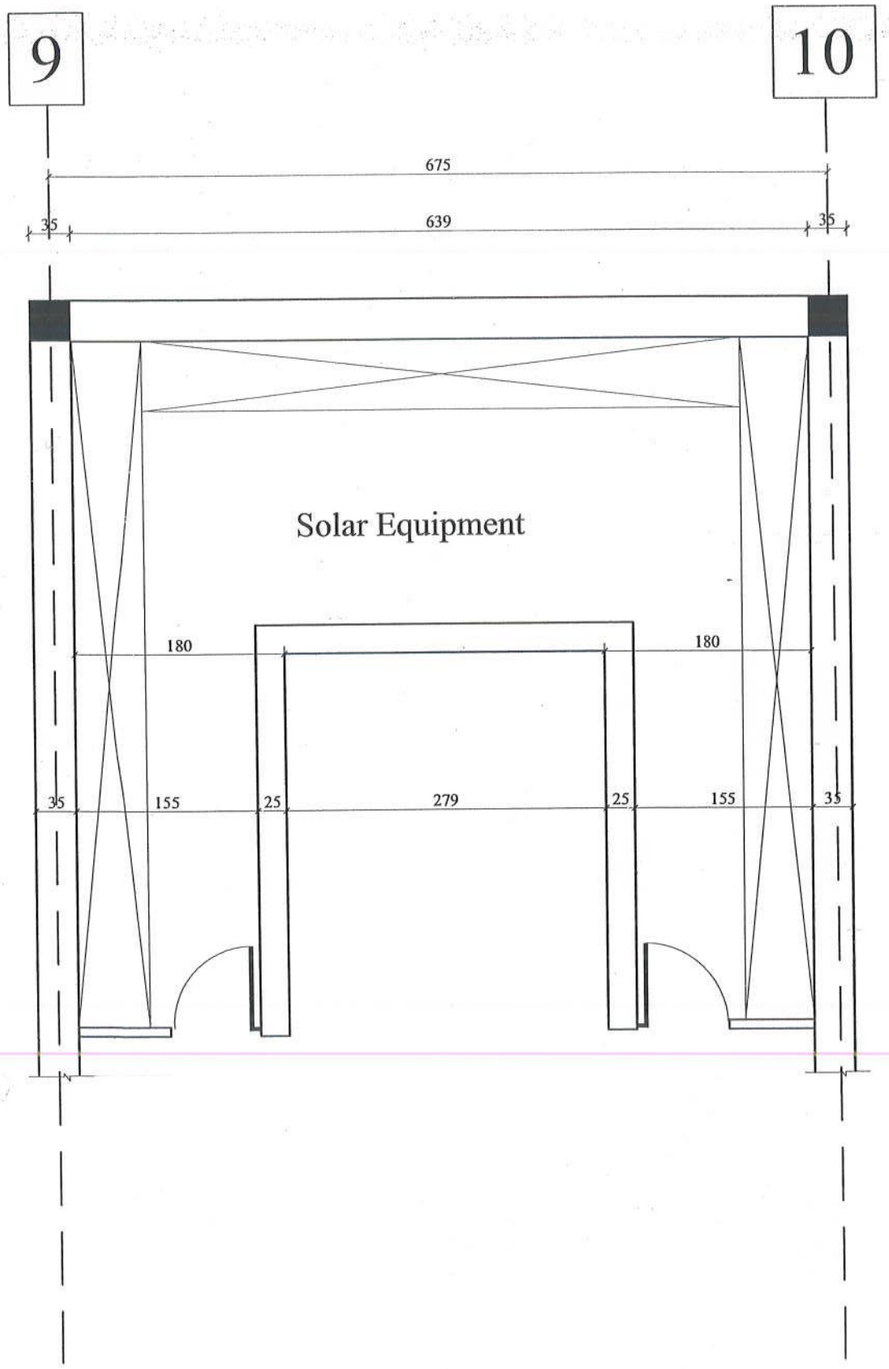

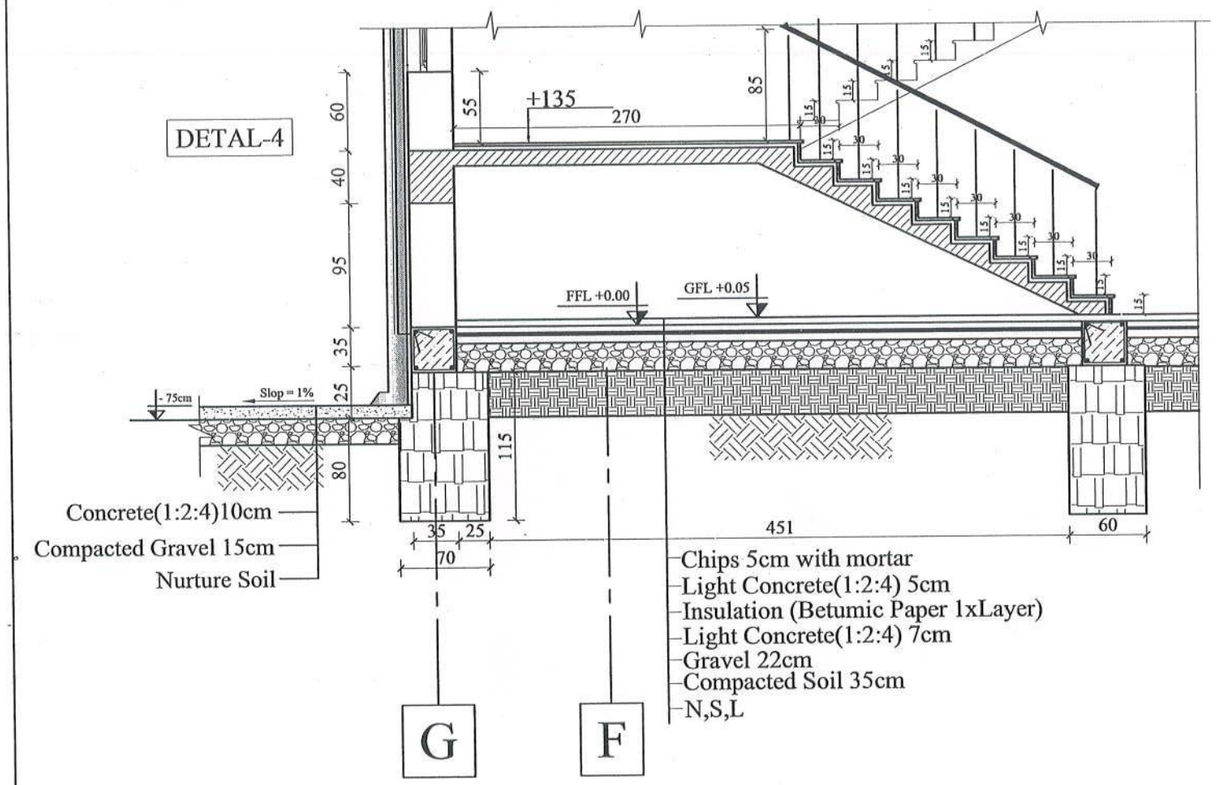

MINISTRY OF EDUCATION DEPARTMENT OF CONSTRUCTION	STANDARD SCHOOL DESIGN IN AFGHANISTAN	ARCHITECT/DESIGN	ARCH. FARAH	APPROVED: Doc/Moe	ENG.AB.MOMEN -RAAD	DRAWING TYPE	ARCHITECTURAL	PROJECT NAME
		CHECKED BY	ARCH.SAID RASOOL	SCALE	AS SHOWN (A1)	CODE # S-0236	13 / 19	PROJECT TYPE AND DRAWING TITLE: 10 CLASS ROOM SCHOOL BURNT BRICK IRON SHEET ROOF WITH COMPUTER LAB AND LABORATORY DETAILS
		TECH- APPROVED BY	ENG.AB.MATIN MAQOL	DATE	December 2014			

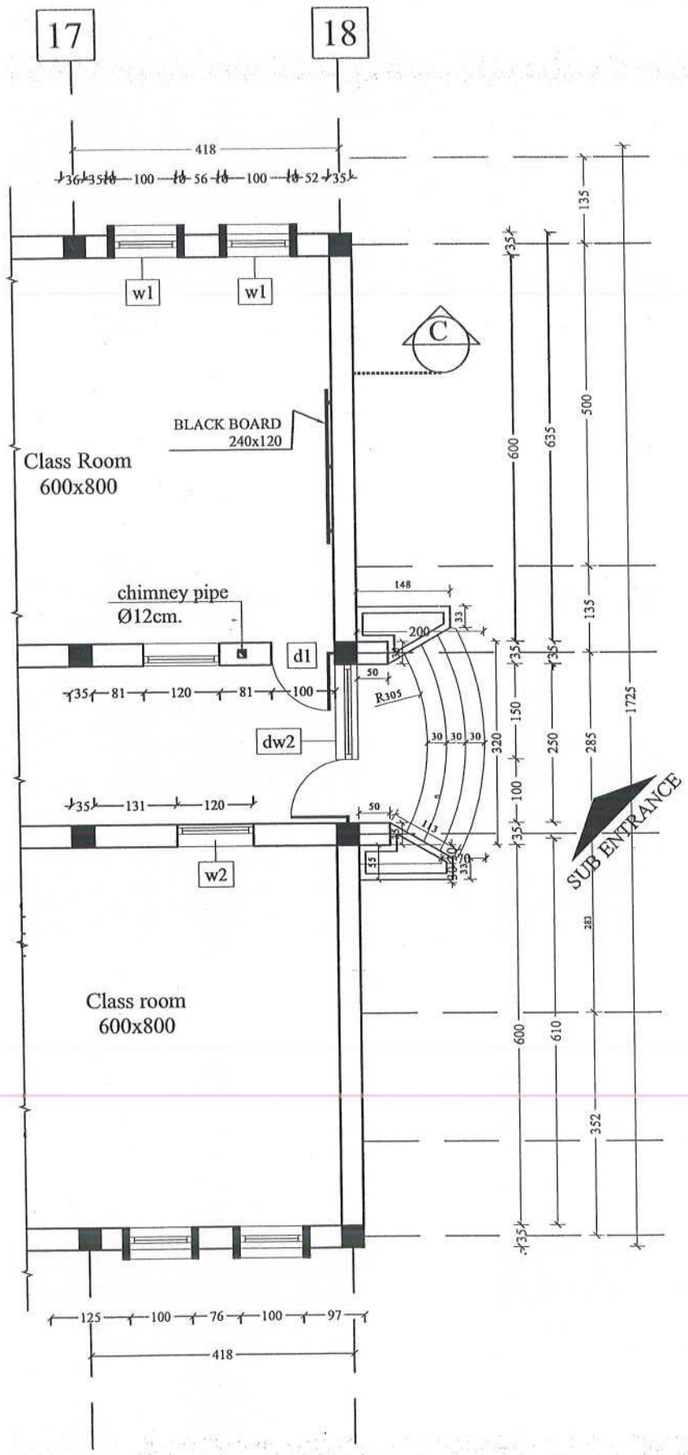

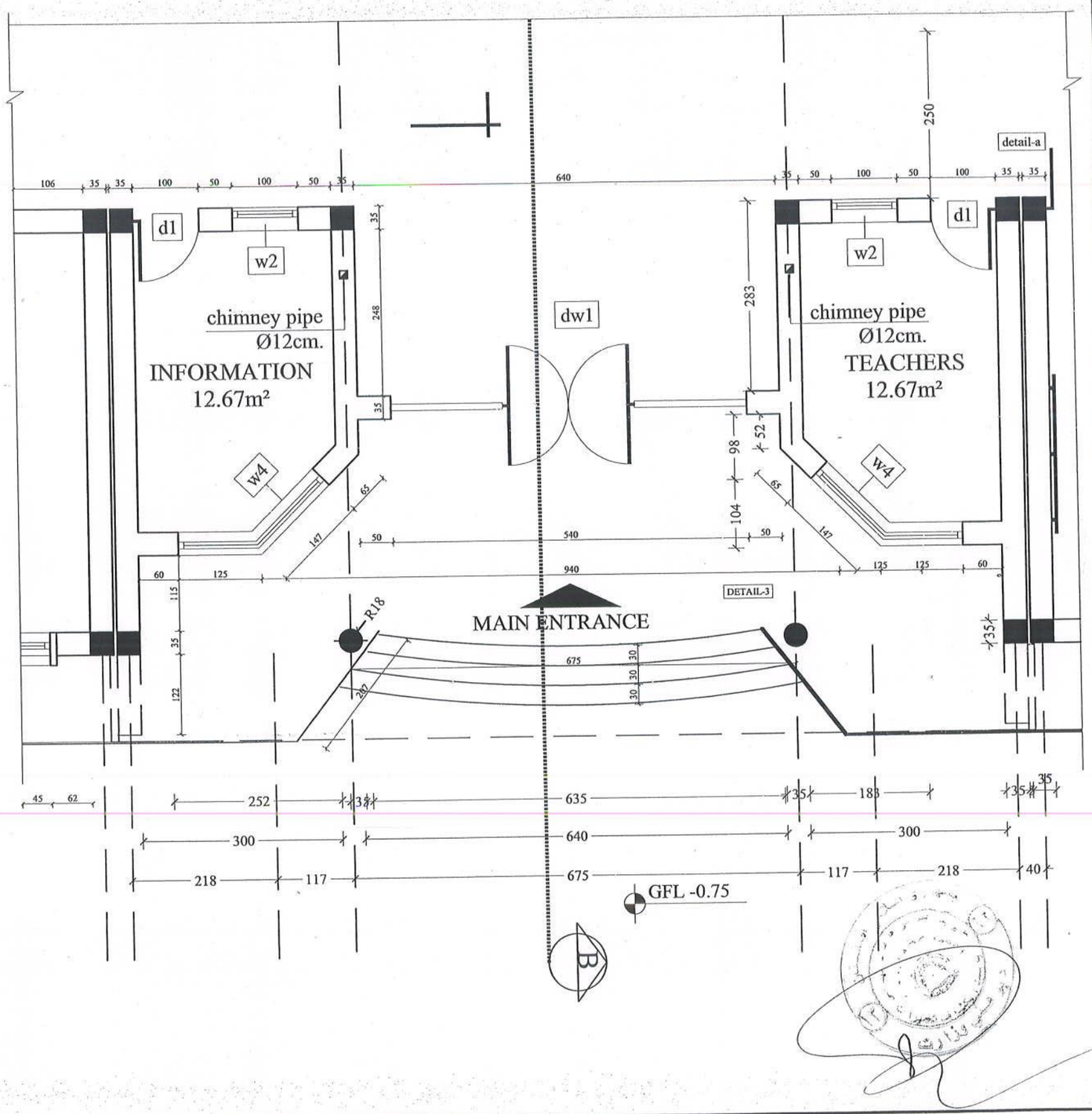

MINISTRY OF EDUCATION
DEPARTMENT OF CONSTRUCTION

STANDARD SCHOOL DESIGN
IN AFGHANISTAN

ARCHITECT/DESIGN	ARCH. FARAH	APPROVED/Doc/Moe	ENG.AB.MOMEN -RAAD-	DRAWING TYPE	ARCHITECTURAL
CHECKED BY	ARCH.SAID RASOOL	SCALE	AS SHOWN (A3)	CODE# S-0256	14 / 19
TECH- APPROVED BY	ENG.AB.MATIN MAQOL	DATE	December 2014		

PROJECT NAME

PROJECT TYPE AND DRAWING TITLE

10 CLASS ROOM SCHOOL BURNT BRICK IRON SHEET ROOF WITH COMPUTER LAB AND LABORATORY
DETAIL'S

window-4 n=2

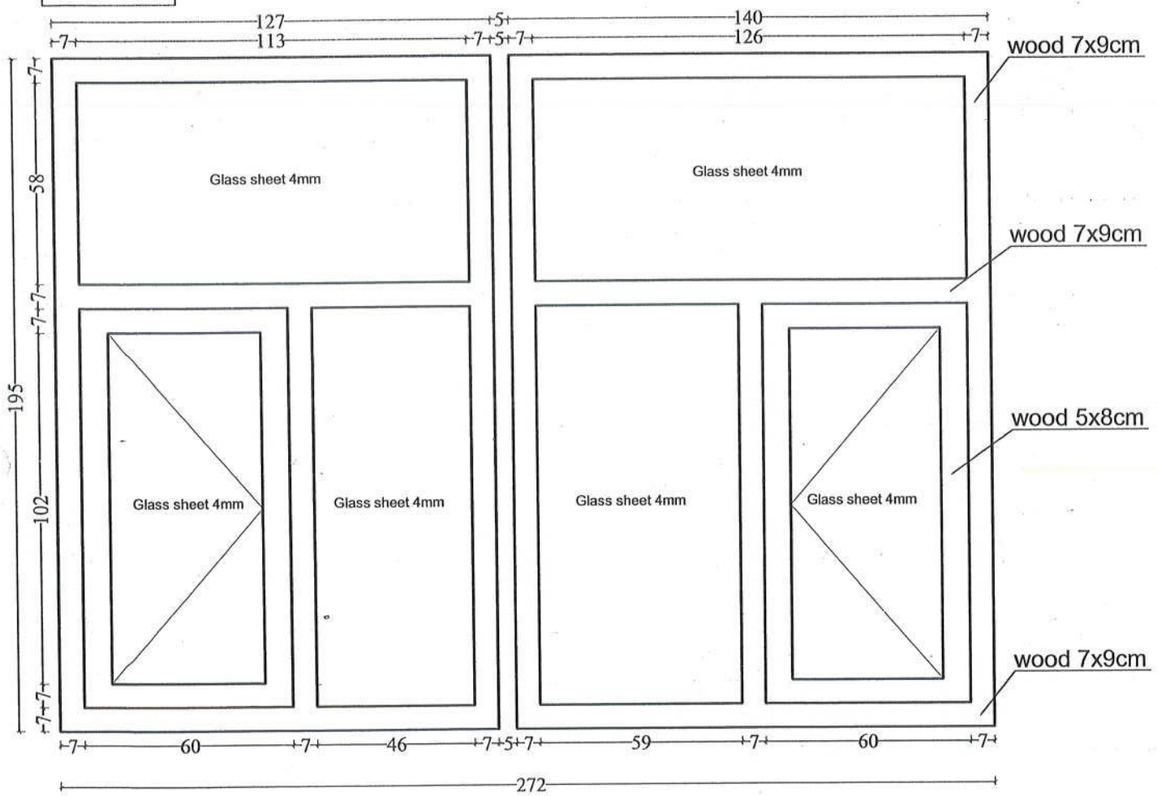

WINDOW-2 n=26

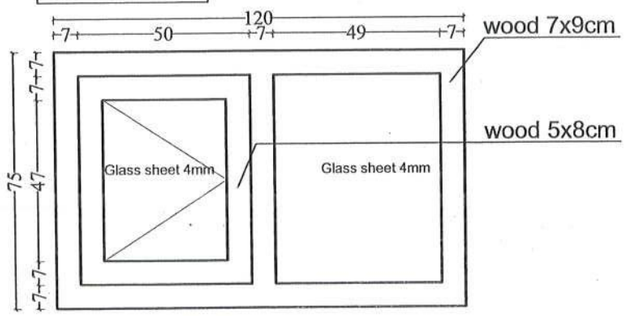

window door 2 n=2

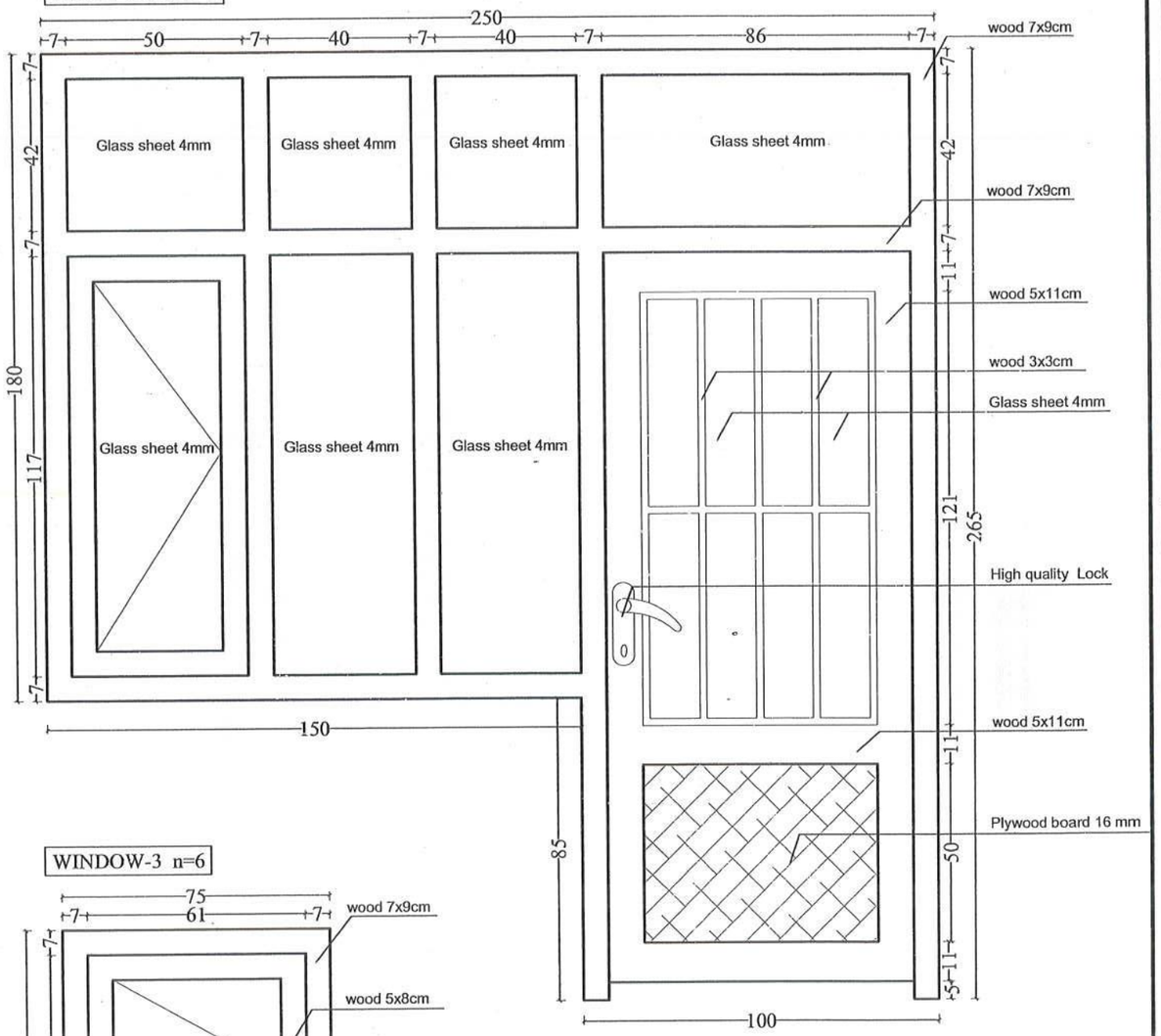

WINDOW-3 n=6

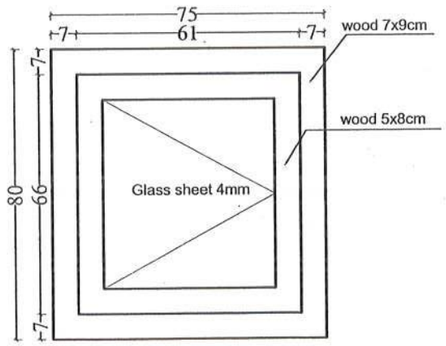

MINISTRY OF EDUCATION
DEPARTMENT OF CONSTRUCTION

STANDARD SCHOOL DESIGN
IN AFGHANISTAN

ARCHITECT/DESIGN	ARCH. FARAH	APPROVED:Doc/Moc	ENG.AB.MOMEN -RAAD-	DRAWING TYPE	ARCHITECTURAL
CHECKED BY	ARCH.SAID RASOOL	SCALE	AS SHOWN (A1)	CODE# S-0234	15 / 19
TECH- APPROVED BY	ENG.AB.MATIN MAQOL	DATE	December 2014		

PROJECT NAME

PROJECT TYPE AND DRAWING TITLE

10 CLASS ROOM SCHOOL BURNT BRICK IRON SHEET ROOF WITH COMPUTER LAB AND LABORATORY
DETAIL'S FROM DOOR & WINDOW

window door -1 n=1

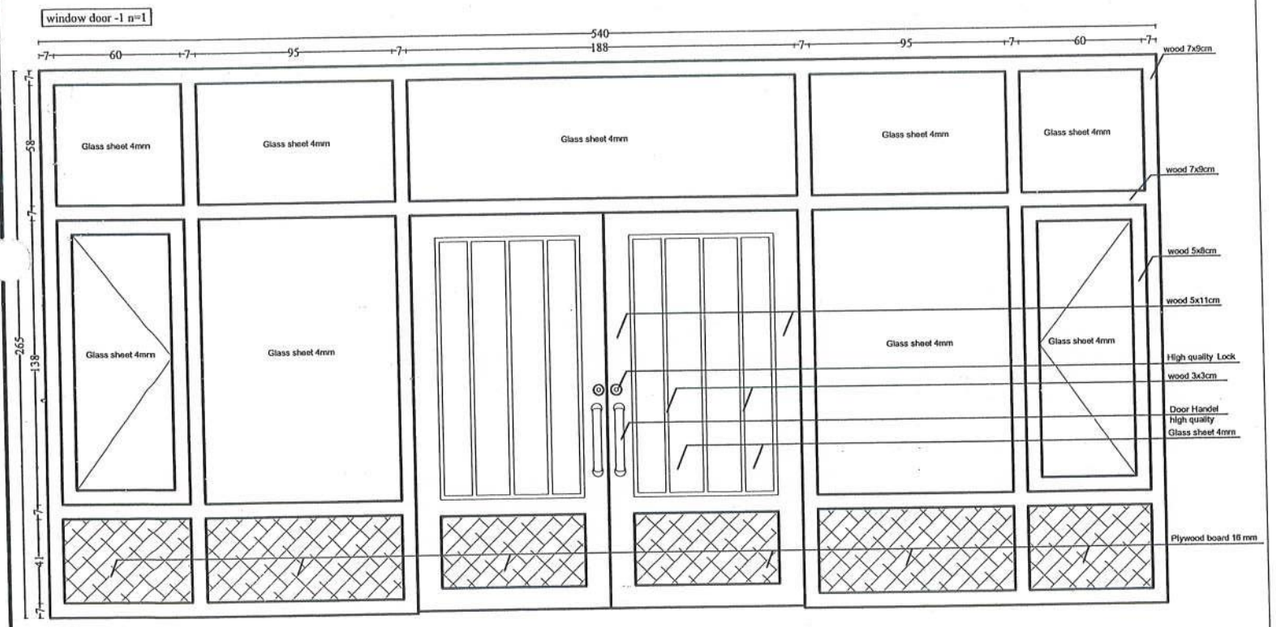

DOOR -1 n=17

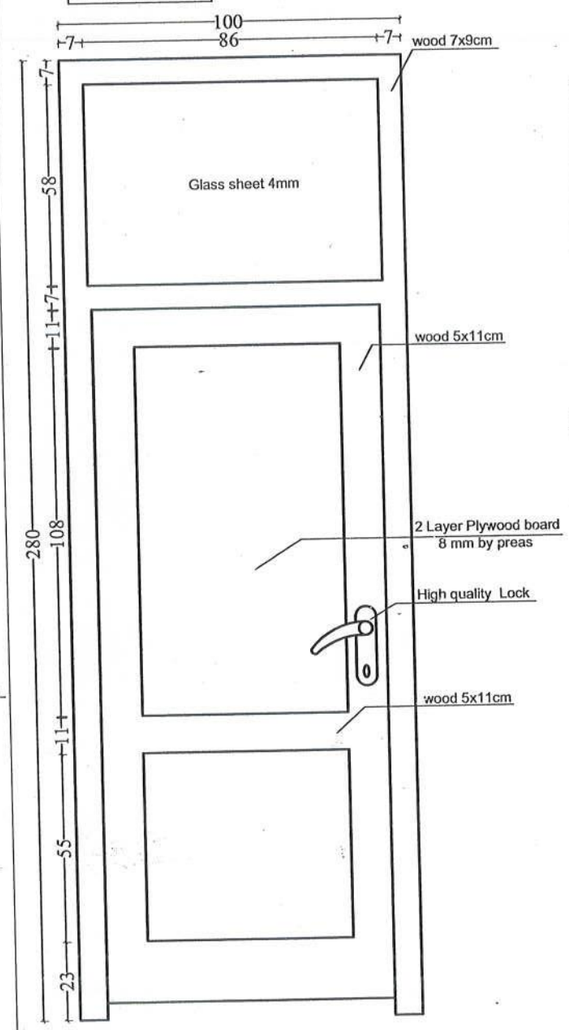

WINDOW-1 n=54

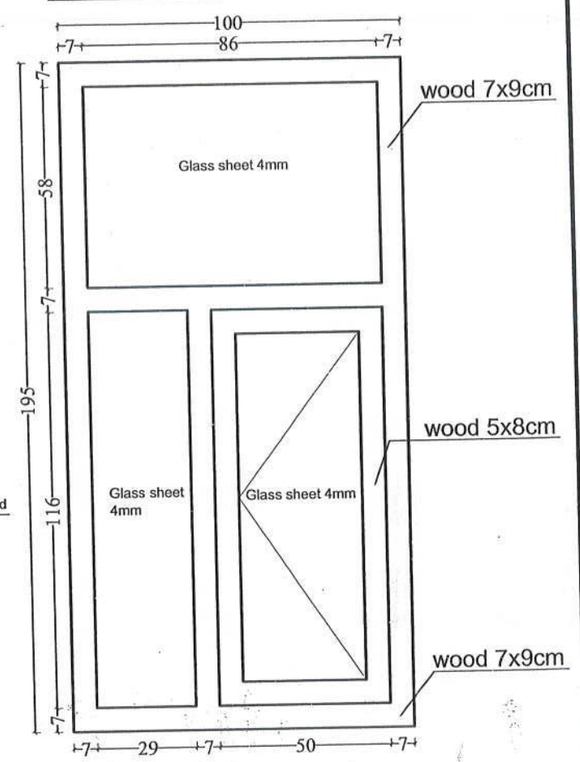

MINISTRY OF EDUCATION DEPARTMENT OF CONSTRUCTION	STANDARD SCHOOL DESIGN IN AFGHANISTAN	ARCHITECT/DESIGN	ARCH. FARAH	APPROVED/Doc/Moe	ENG.AB.MOMEN -RAAD-	DRAWING TYPE	ARCHITECTURAL	PROJECT NAME
		CHECKED BY	ARCH.SAID RASOOL	SCALE	AS SHOWN (A1)	CODE # S-0256	16 / 19	PROJECT TYPE AND DRAWING TITLE: 18 CLASS ROOM SCHOOL BURNT BRICK IRON SHEET ROOF WITH COMPUTER LAB AND LABORATORY DETAIL'S FROM DOOR & WINDOW
		TECH- APPROVED BY	ENG.AB.MATIN MAQOL	DATE	December 2014			

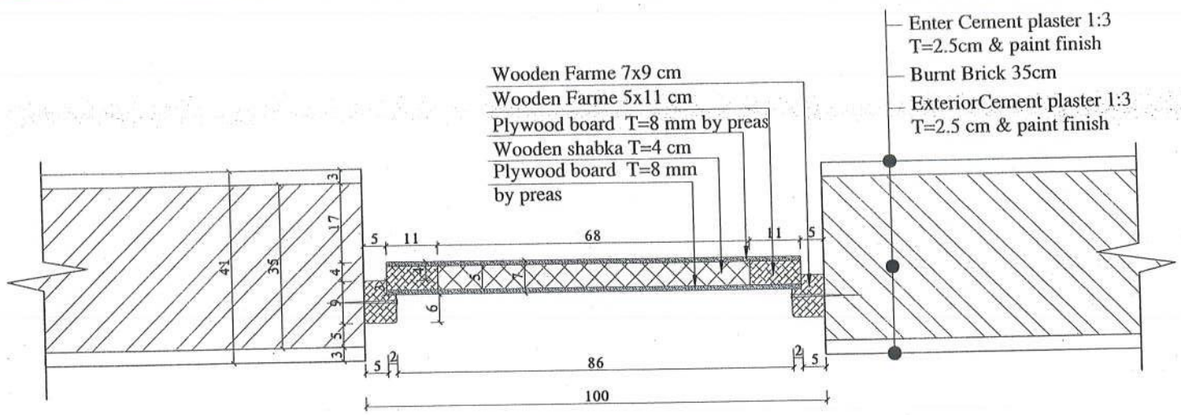

Details of Doors

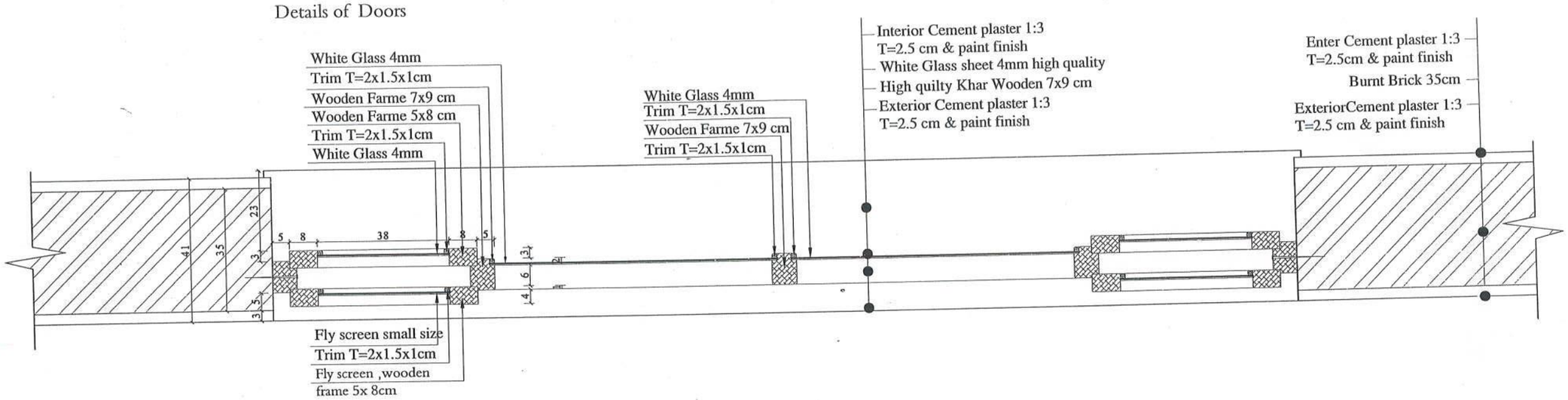

Fly screen ,by wooden frame for all windows

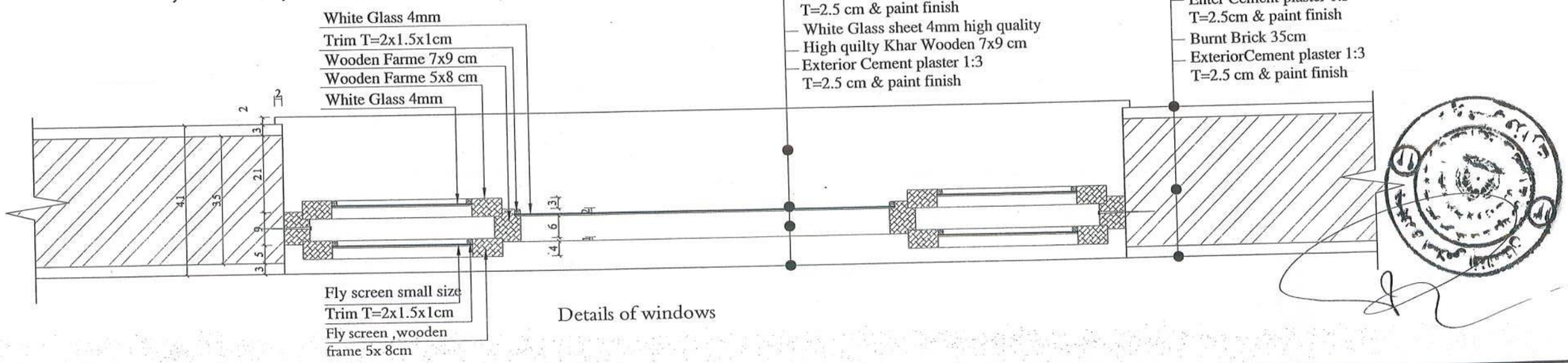

Details of windows

MINISTRY OF EDUCATION DEPARTMENT OF CONSTRUCTION	STANDARD SCHOOL DESIGN IN AFGHANISTAN	ARCHITECT/DESIGN	ARCH. FARAH	APPROVED.Doc/Moe	ENG.AB.MOMEN -RAAD	DRAWING TYPE	ARCHITECTURAL
		CHECKED BY	ARCH.SAID RASOOL	SCALE	AS SHOWN(A1)	CODE # S-0226	17 / 19
		TECH- APPROVED BY	ENG.AB.MATIN MAQOL	DATE	December 2014		

PROJECT NAME

PROJECT TYPE AND DRAWING TITLE

10 CLASS ROOM SCHOOL BURNT BRICK IRON SHEET ROOF WITH COMPUTER LAB AND LABORATORY
DETAIL'S FROM WINDOW AND DOOR

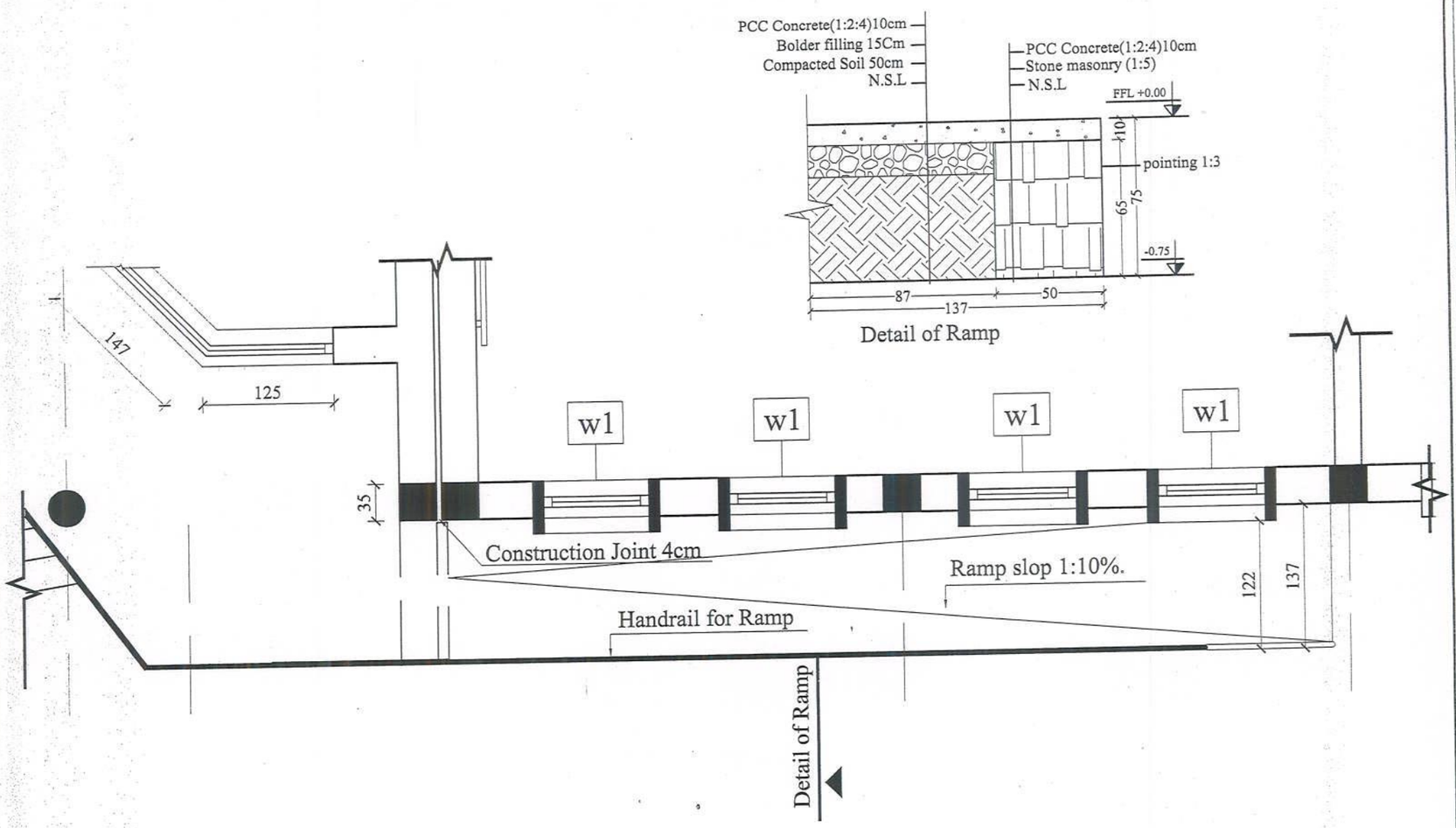

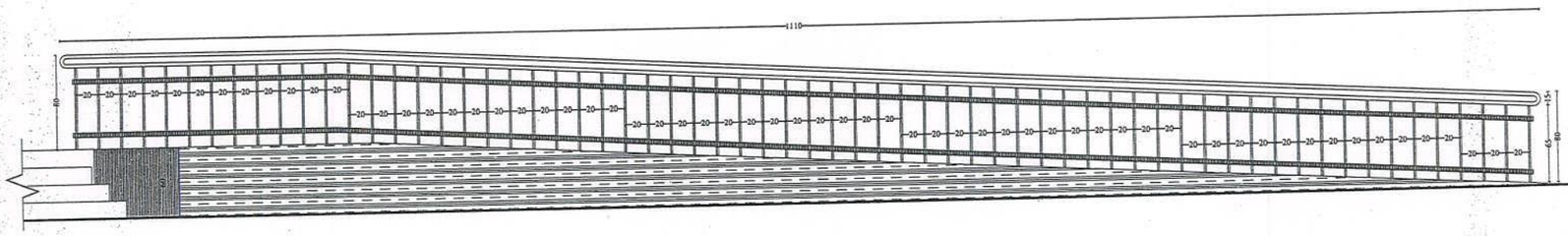

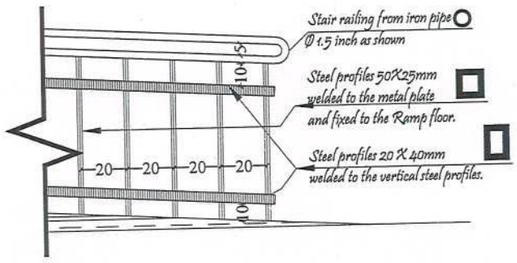

Stair railing from iron pipe Ø 1.5 inch as shown

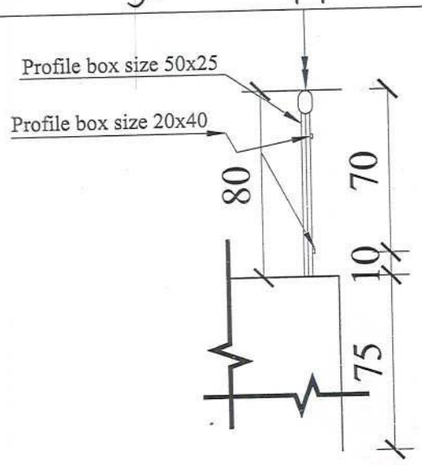

MINISTRY OF EDUCATION DEPARTMENT OF CONSTRUCTION	STANDARD SCHOOL DESIGN IN AFGHANISTAN	ARCHITECT/DESIGN: ARCH. FARAH	APPROVED: Dir/Mir	ENG.AB.MOMIN -RAAD	DRAWING TYPE: ARCHITECTURAL	PROJECT NAME
		CHECKED BY: ARCH.SAID RASOOL	SCALE:	AS SHOWN (A1)	CODE # S-02M	18 / 19	PROJECT TYPE AND DRAWING TITLE: 18 CLASS ROOM SCHOOL BURNT BRICK IRON SHEET ROOF WITH COMPUTER LAB AND LABORATORY DETAILS FROM HANDRAIL & WINDOW
		TECH- APPROVED BY: ENG.AB.MATIN MAQSL	DATE:	December/ 2011		

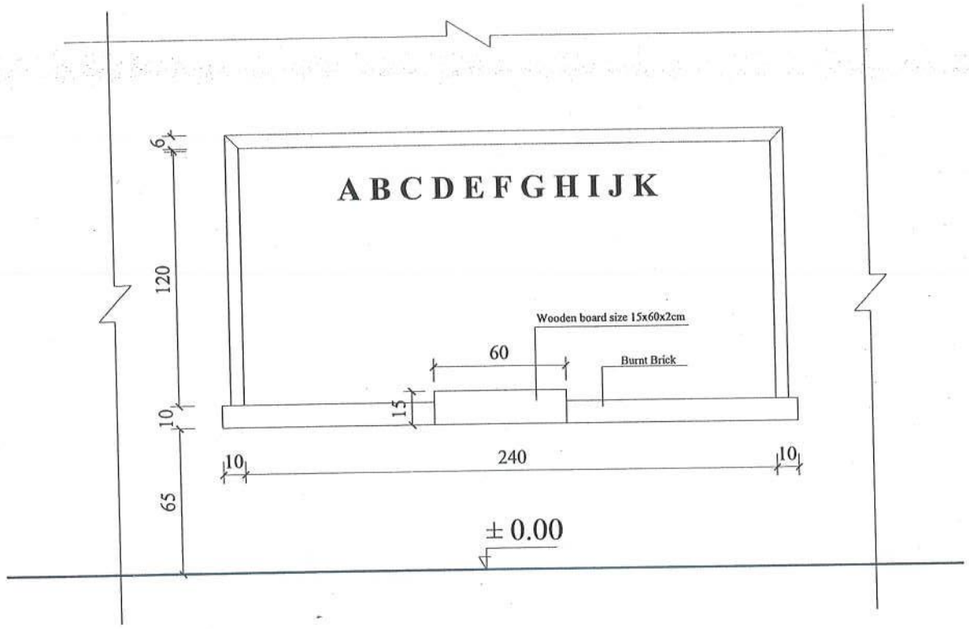

Board Elevation

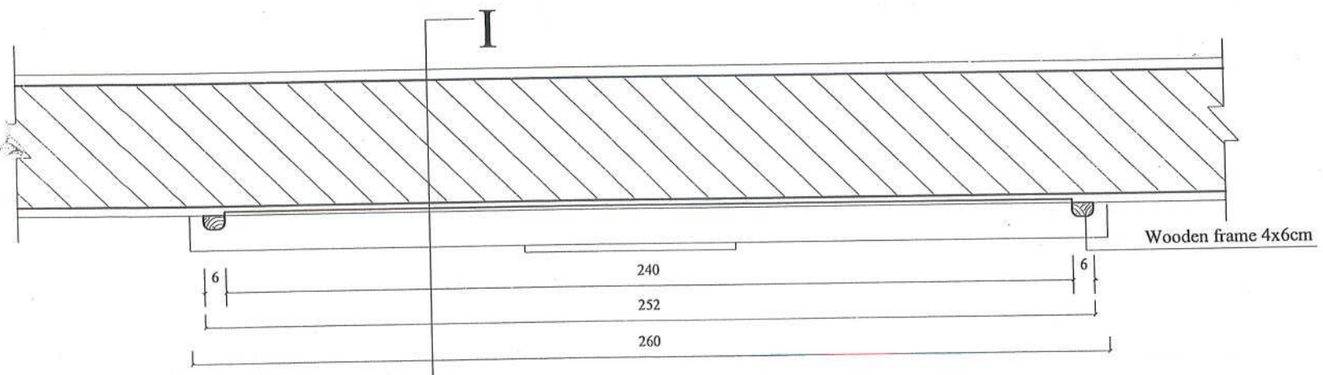

PLAN

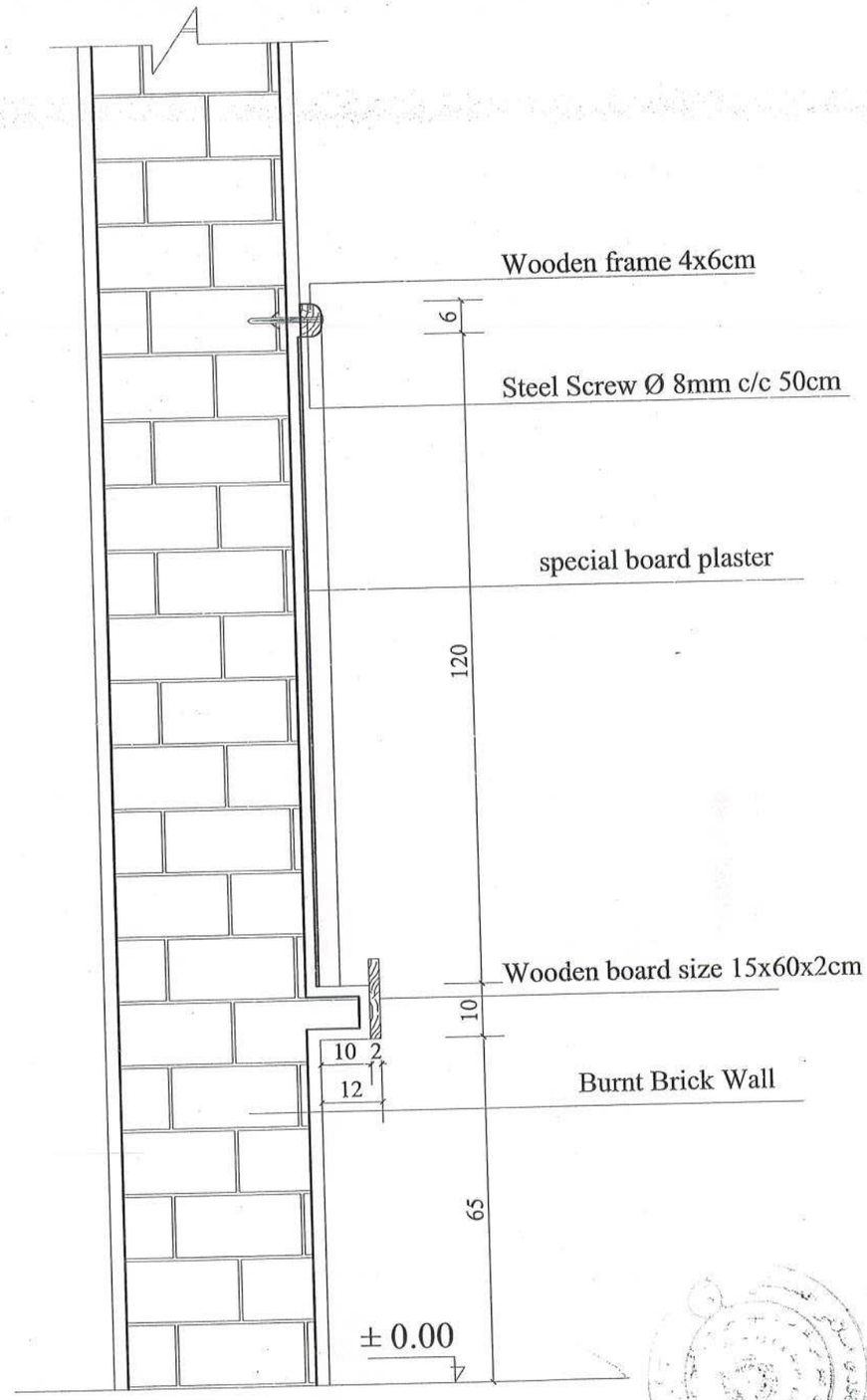

SECTION I-I

MINISTRY OF EDUCATION DEPARTMENT OF CONSTRUCTION	STANDARD SCHOOL DESIGN IN AFGHANISTAN	ARCHITECT/DESIGN	ARCH.NAKILA	APPROVED:Doc/Moe	ENG .AB.MOMEN RAD	DRAWING TYPE / CODE NO	ARCHITECTUR 1/1	PROJECT NAME	
		CHEKED BY	ARCH.SAID RASOOL	SCALE	AS SHOWN (A3)			PROJECT TYPE/ DRAWING TITLE	Board detail/ Section , Elevation ,Plan
		TECH- APPROVED BY	ENG.AB.MATIN MAQOL	DATE	JUNE 2014				

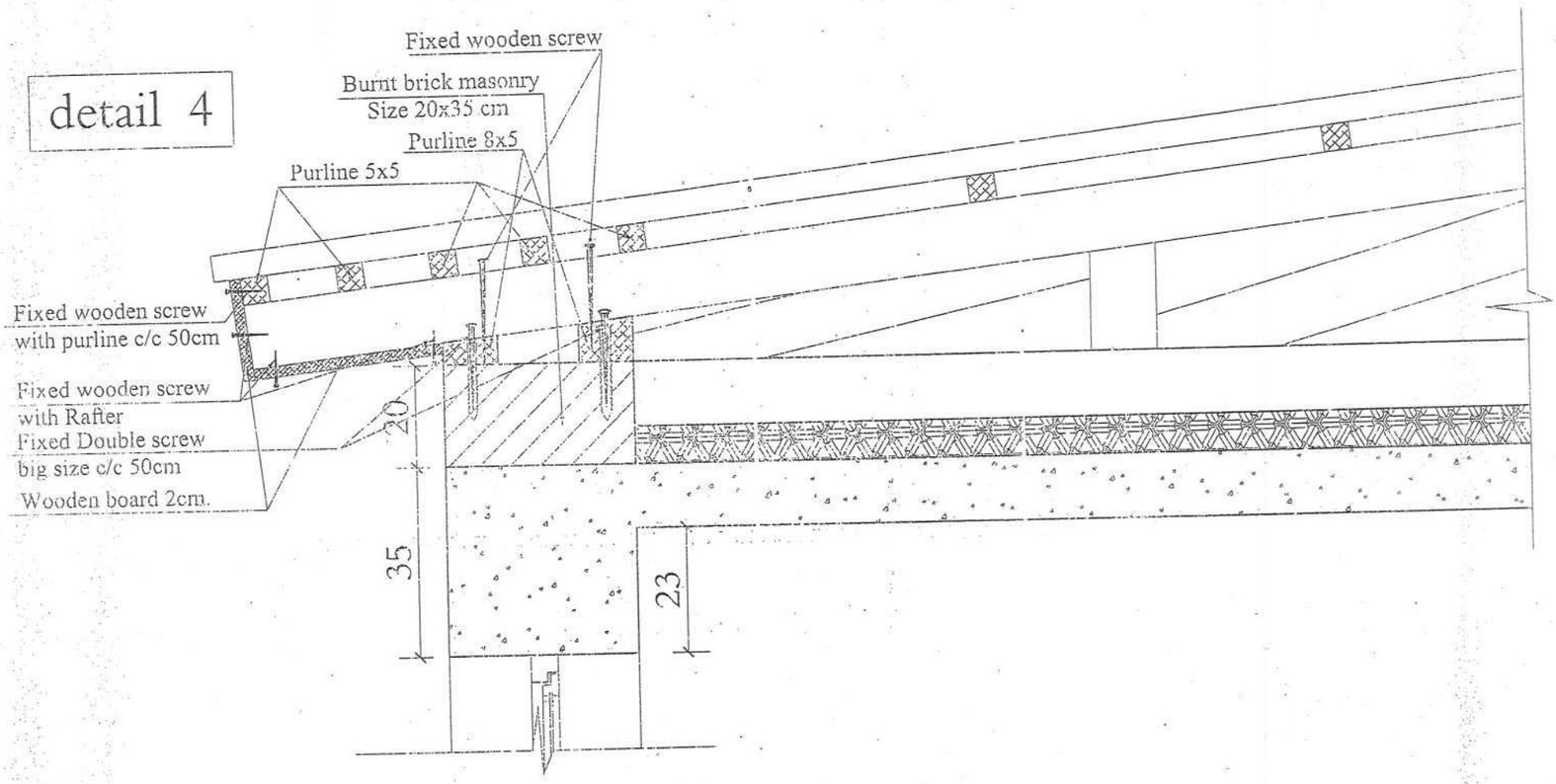

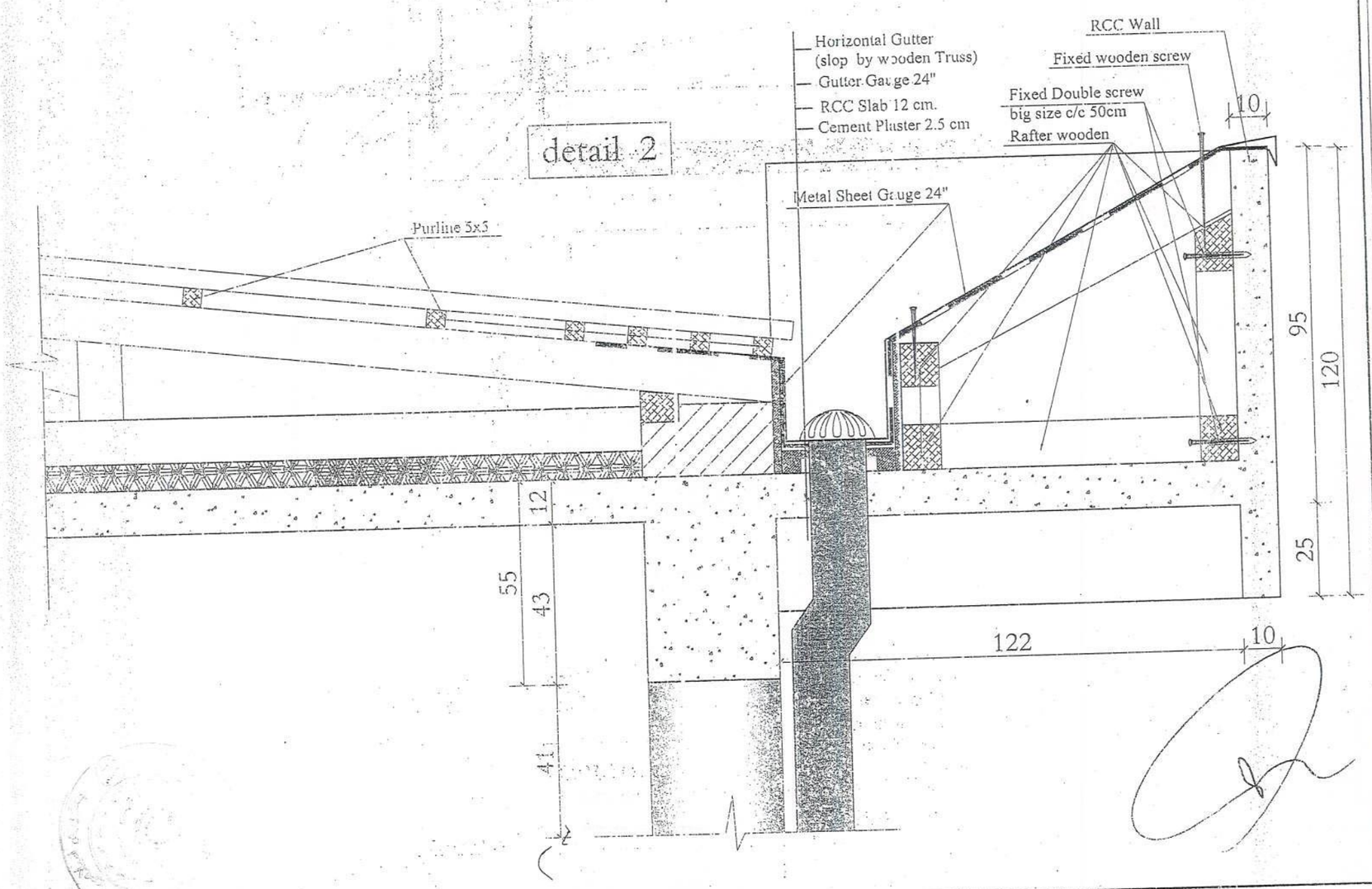

MINISTRY OF EDUCATION DEPARTMENT OF CONSTRUCTION	STANDARD SCHOOL DESIGN IN AFGHANISTAN		DRAWING TYPE	ARCHITECTURAL	PROJECT NAME
			1:50 / 1:10	01 / 01	PROJECT TYPE AND DRAWING TITLE: DETAILS OF FIXING THE IRON SHEET TO PARAPET WALL FOR ALL SCHOOLS

R.C.C FOR 10 CLASS ROOM SCHOOL-BURNT BRICK-IRON SHEET ROOF WITH COMPUTER LAB AND LABORATORY

مقاومت فشاری مجاز خاک (caly) براساس kg /cm2

Bearing Capacity of Soil Based on (ACI)

Recommendation	Limit	Specifications	Types of Soil
8	7–10	Very dense Campacted	& Mix of Gravel ,Sand & Gravel ,Gravel Stone جغل، جغل وریگ ،مخلوط جغل وسنگ
6	5–7	Medium Course Compacted	
4	3–6	Loose Campacted	
4	4–6	Very dense Campacted	Sand with a little Greval ,Stiff Sand ریگ سخت ، ریگ باکمی جغل
3	3–4	Medium Course Compacted	
2	2–3	Loose Campacted	
3	3–5	Very dense Campacted	Clay Sand with Mud or , Medium Stiff Sand ریگ باسختی متوسط ، ریگ با لای یارس
2.5	2–4	Medium Course Compacted	
1.5	1–2	Loose Campacted	
3	3–4	Very dense Campacted	little Mud or Sand, Sand with a Uniform Clay ریگ یکنواخت، ریگ باکمی جغل
2	2–3	Medium Course Compacted	
1.5	1–2	Loose Campacted	
4	3–6	Very Stiff	Mud with Sand or Uniform Clay , Clay رس یکنواخت، ریگ باکمی جغل
2	1–3	Medium Stiff	
0.5	0.5–1	Uncompacted	
3	2–4	Very Stiff	or Clay Mud,Sandy Mud لای ،لای ریگی یارسی
1.5	1–3	Medium Stiff	
0.5	0.5–1	Uncompacted	

al Notes

Concrete for all reinforced elements will be of ratio(1:1.5:3) and cubical strength of (200Kg/cm^2) after 28 days.

Reinforcement grade 1mild steel having minimum yield stress of 2100kg/cm^2 and reinforcement grade 2 deformend bar having minimum yield stress of 2700kg/cm^2 .

For Brick masonry Cement and sand mortar ratio should be (1:5).

Interior and exterior wall plaster's Cement mortar ratio should be (1:3).

Form work should be lubricated well before installing reinforcement on.

Bricks should be soaked at water before using.

The rebars should be without Corrosion(or Oxidant free)

Sand and Gravel should be washed before using.

Usable water for Concrete should not be Acidic , Salted and free of Organic materials

In Concrete mixture river Gravel with size 2,5 cm be used rather than mountain Crash

Form work for bending elements should not be removed for less than 18 days.

Before amendment the structure design consulting with design Engineer is must.

Procedure of the project commencement till ending should be supervised by MoE site Engineer

Bearing Capacity of Soil for Foundation design is calculated 1,4Kg/Cm^2.

تبصره:

1- مارک کانکریت سیخدار در تمام عناصر ساختمانی (M-200) با تناسب (1:1.5:3)، استفاده شود .

2- در تعمیر مذکور از سیخ های کلاس I-A با مقاومت سنجشی (Ra=2100kg/cm^2) و I-AI با مقاومت سنجشی (R=2700 kg/cm^2) استفاده شده است.

3- برای خشت کاری از مصالح سمنت وریگ با تنا سب (1:5) استفده شود.

4- پلستر دیوارهای داخلی و خارجی ازمصالح سمنت وریگ با مارک (M-300)با تناسب (1:3) استفده شود.

5- قالب هاقبل ازاستفده باید خوب چرب کاری شود.

6- خشت ها قبل ازاستفاده باید خوب مرطوب گردد.

7- سیخ های مورد استفده باید عاری از زنگ زده گی باشد .

8- ریگ وجغل قبل ازاستفاده باید شستشو گردد .

9- آب های مورد استفده برای مخلوط کانکریت شور و نمکی نباشد .

10- در مخلوط کانکریت جغل کرش نوع دریایی یا سورث های الی قطر 2.5 سانتی متر استفده گردد و از جغل کرش نوع صخره ای یا کوهی استفده نشود .

11 - قالب های عناصر انحنایی به هیچ وجه قبل از 18 روز دور نگردد .

12- در حصه تعدیل نقشه با انجنیر دیزاین کننده مشوره گردد .

13- پروسه کار پروژه از شروع تا ختم توسط انجنیر ساختمان مراقبت گردد.

14- مقاومت خاک (1.4cm/gk^2) برای دیزاین تهداب ها درنظر گرفته شده است .

MINISTRY OF EDUCATION DEPARTMENT OF CONSTRUCTION	STANDARD SCHOOL DESIGN IN AFGHANISTAN	ARCHITECT/DESIGN	ARCH.FARAH	APPROVED: Doc/Moe	ENG.AB MOMEN RAAD	DRAWING No	STRUCTURAL	PROJECT NAME
		RCC/ DESIGN	M. Sc. ENG.M.RAHIM	SCALE	AS SHOWN (A3)	CODE NO S-0256	1 / 25	DRAWING TITLE: 10 CLASS ROOM SCHOOL BURNT BRICK IRON SHEET ROOF With computer lab and labratory General notes
		TECH- APPROVED BY	M.Sc. ENG.AB.MATIN MAQOL	DATE	1393-4-5			E

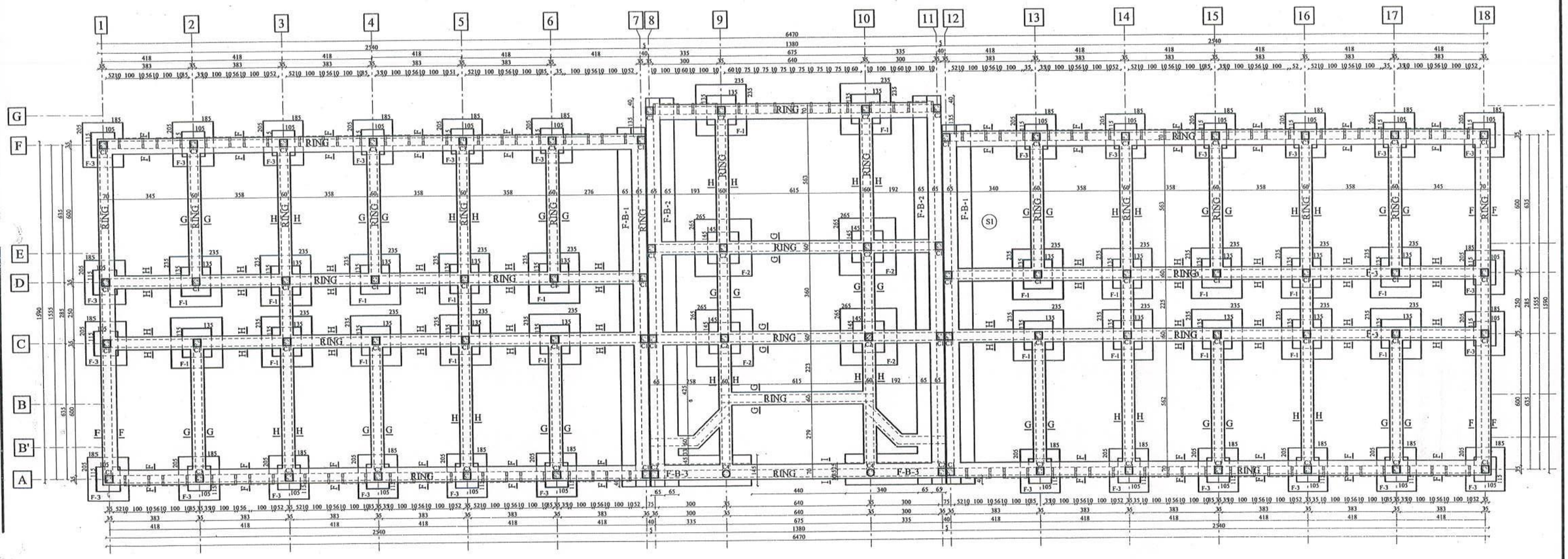

FOUNDATION PLAN

MINISTRY OF EDUCATION DEPARTMENT OF CONSTRUCTION	STANDARD SCHOOL DESIGN IN AFGHANISTAN	ARCHITECT/DESIGN	ARCH.FARAH	APPROVED:Doc/Moe	ENG.AB MOMEN RAAD	DRAWING No	STRUCTURAL
		RCC/ DESIGN	M. Sc. ENG.M.RAHIM	SCALE	AS SHOWN (A3)	CODE NO S-0256	2 / 25
		TECH- APPROVED BY	M.Sc. ENG.AB.MATIN MAQOL	DATE	1393-4-5		

PROJECT NAME: 10 CLASS ROOM SCHOOL BURNT BRICK IRON SHEET ROOF. With computer lab and labratory

DRAWING TITLE: FOUNDATION PLAN

E

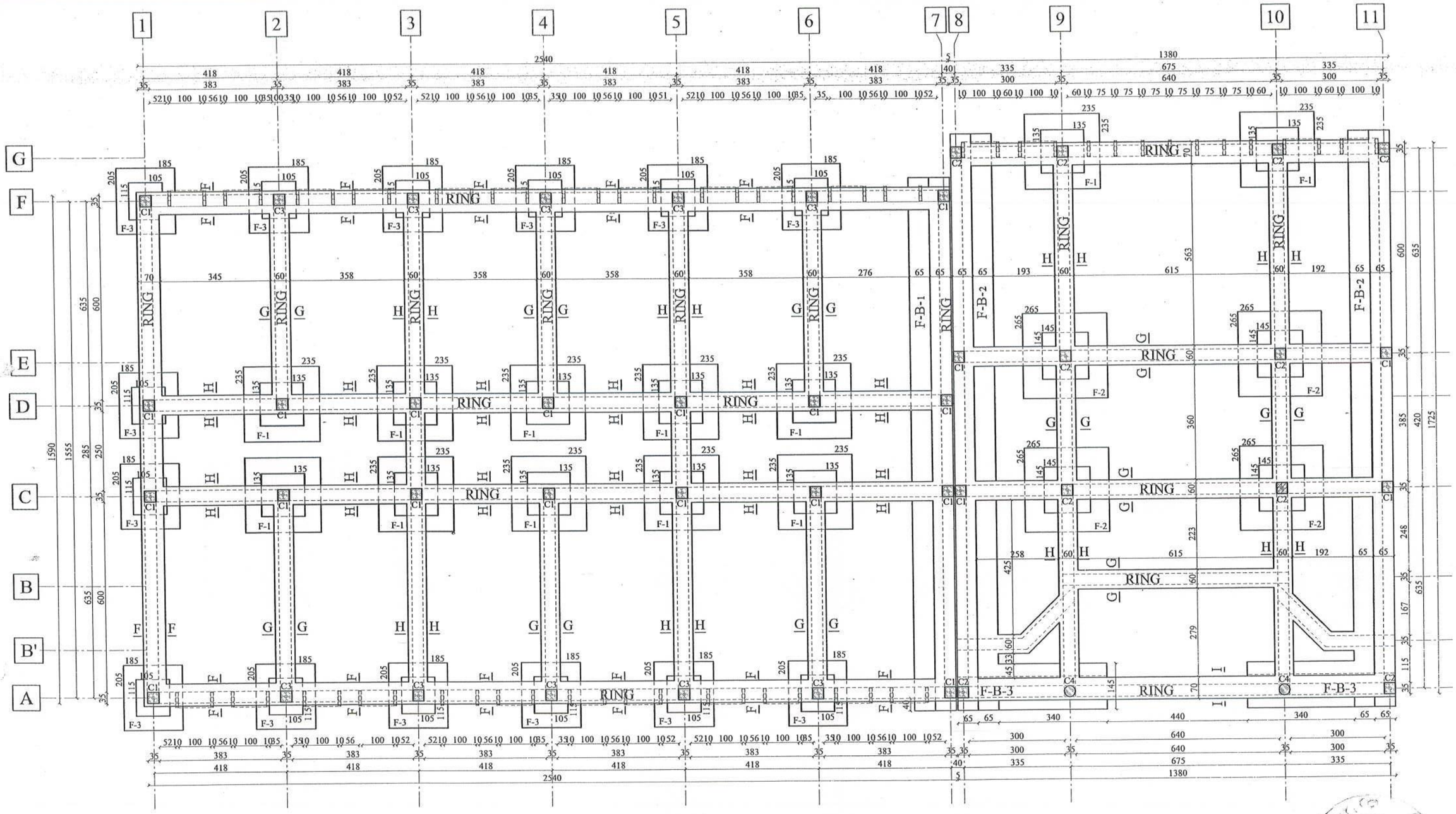

FOUNDATION PLAN

MINISTRY OF EDUCATION DEPARTMENT OF CONSTRUCTION	STANDARD SCHOOL DESIGN IN AFGHANISTAN	ARCHITECT/DESIGN	ARCH.FARAH	APPROVED.Doc/Moe	ENG.AB MOMEN RAAD	DRAWING No	STRUCTURAL
		RCC/ DESIGN	M. Sc. ENG.M.RAHIM	SCALE	AS SHOWN (A3)	CODE NO S-0256	3 / 25
		TECH- APPROVED BY	M.Sc. ENG.AB.MATIN MAQOL	DATE	1393-4-5		

PROJECT NAME: 10 CLASS ROOM SCHOOL BURNT BRICK IRON SHEET ROOF. With computer lab and labratory

DRAWING TITLE: FOUNDATION PLAN

E

F-1(22Nrs)

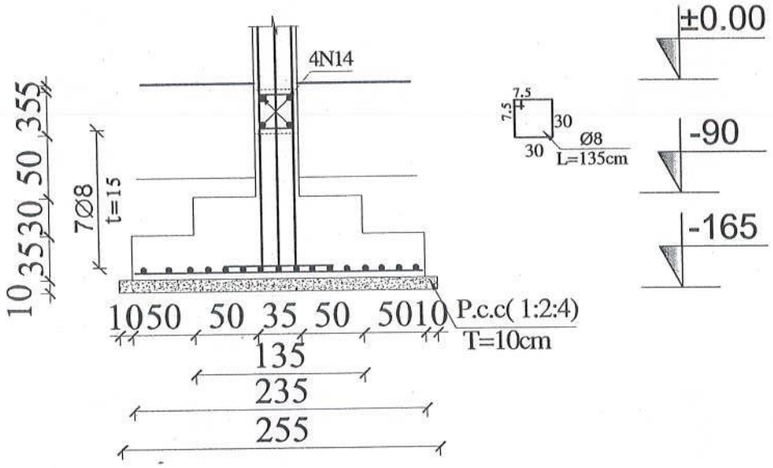

F-2(4Nrs)

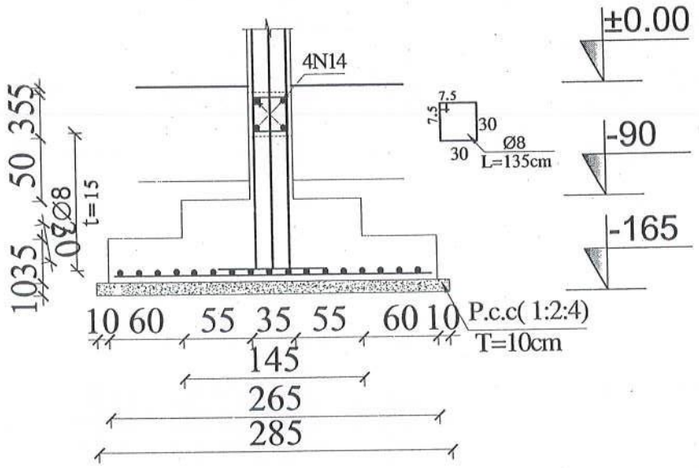

F-3(28Nrs)

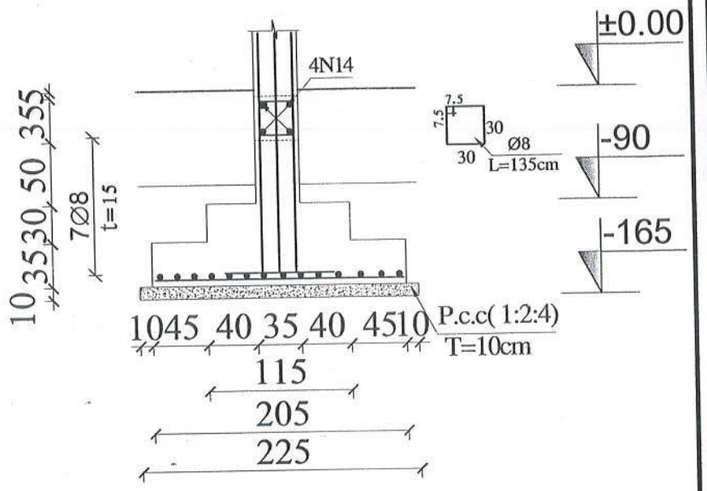

16N14x230(T=14.5c/c)

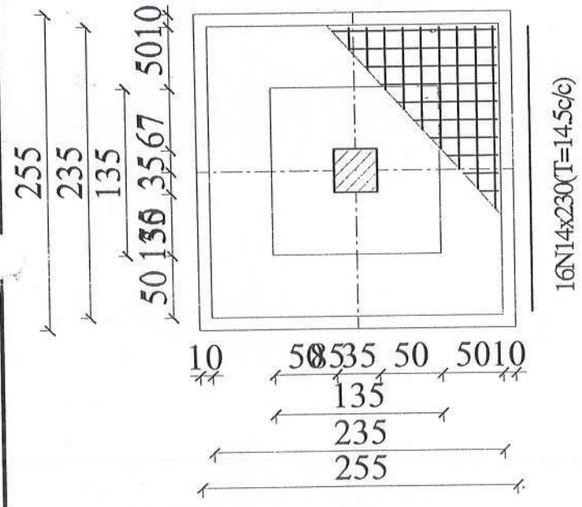

17N14x260(T=15c/c)

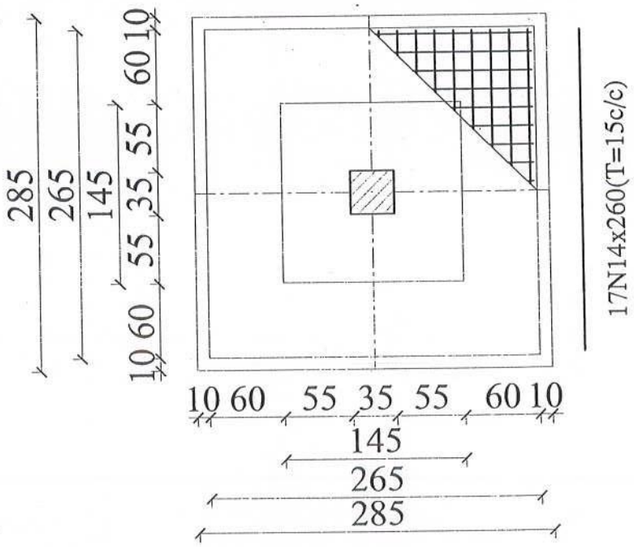

14N14x200(T=14c/c)

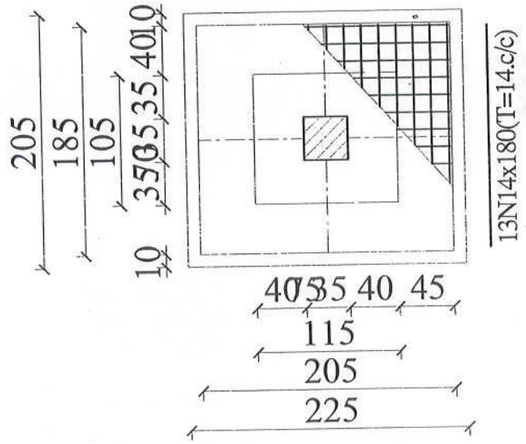

FOUNDATION DETAIL

MINISTRY OF EDUCATION DEPARTMENT OF CONSTRUCTION	STANDARD SCHOOL DESIGN IN AFGHANISTAN	ARCHITECT/DESIGN	ARCH.FARAH	APPROVED.Doc/Moe	ENG.AB MOMEN RAAD	DRAWING No	STRUCTURAL
		RCC/ DESIGN	M. Sc. ENG.M.RAHIM	SCALE	AS SHOWN (A3)	CODE NO S-0256	4 / 25
		TECH- APPROVED BY	M.Sc. ENG.AB.MATIN MAQOL	DATE	1393-4-5		

PROJECT NAME: 10 CLASS ROOM SCHOOL BURNT BRICK IRON SHEET ROOF With computer lab and labratory

DRAWING TITLE: FOUNDATION DETAIL

F

F-B-1(2Nrs)

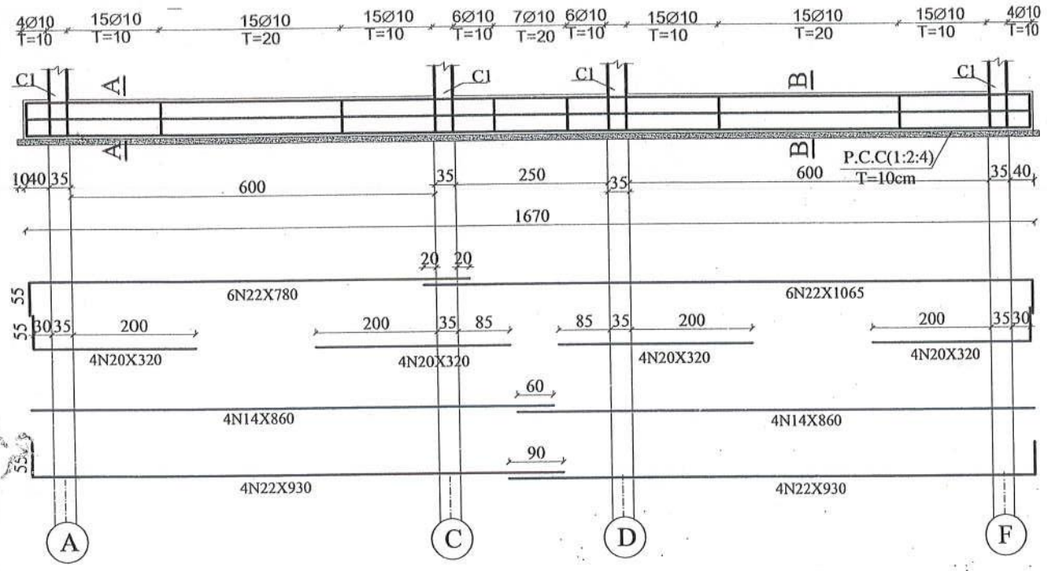

F-B-2(2Nrs)

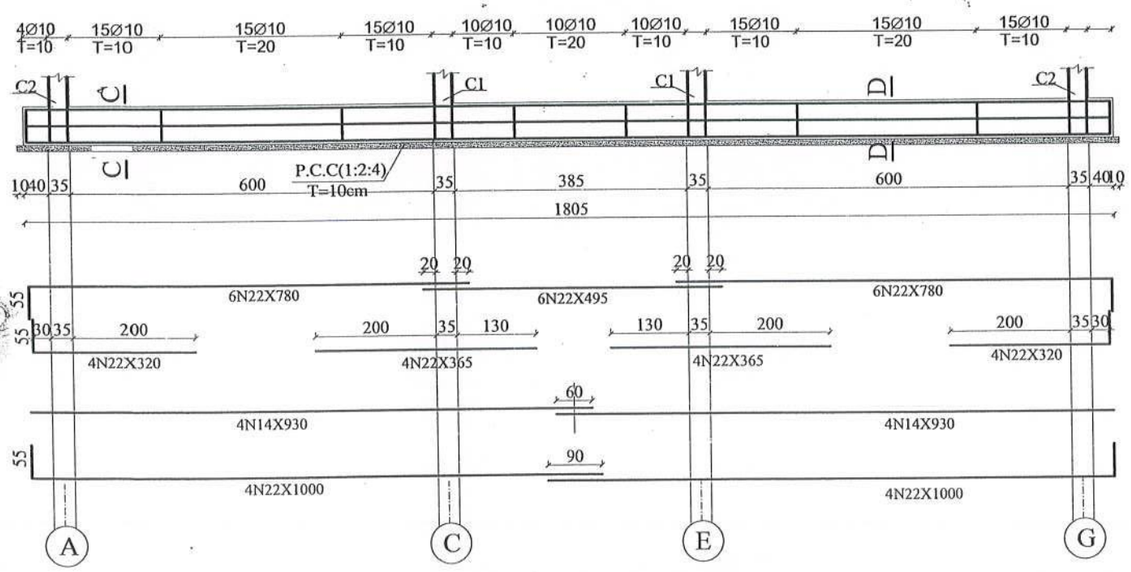

FOUNDATION BEAMS

SEC:B-B

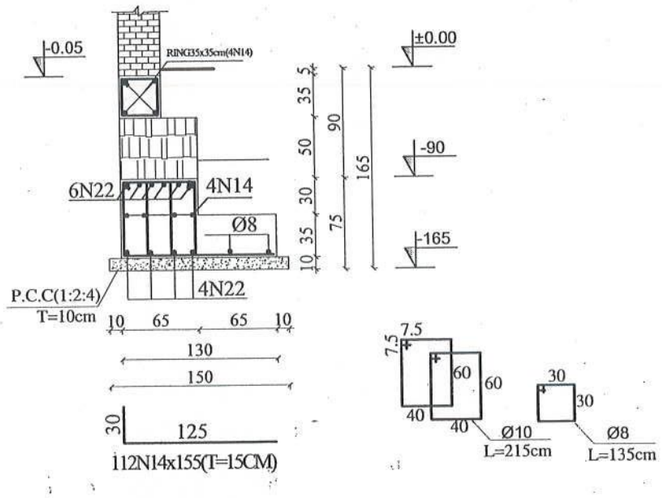

SEC:A-A

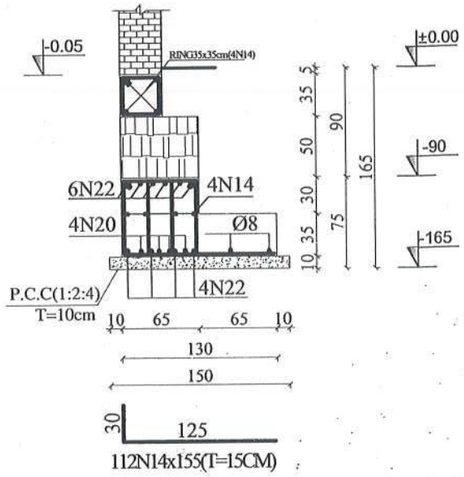

SEC:D-D

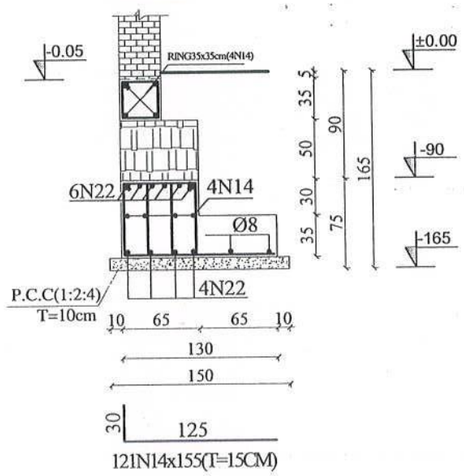

SEC:C-C

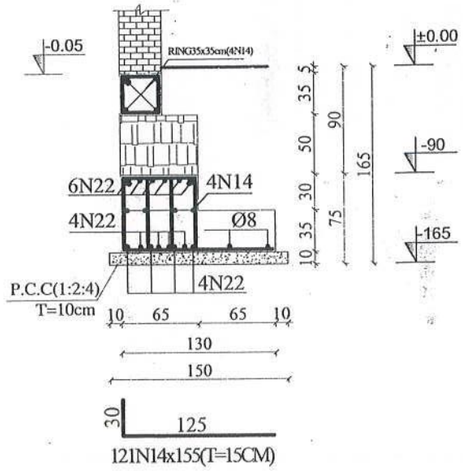

MINISTRY OF EDUCATION DEPARTMENT OF CONSTRUCTION	STANDARD SCHOOL DESIGN IN AFGHANISTAN	ARCHITECT/DESIGN	ARCH.FARAH	APPROVED Doc/Moe	ENG.AB MOMEN RAAD	DRAWING No	STRUCTURAL	PROJECT NAME
		RCC/ DESIGN	M. Sc. ENG.M.RAHIM	SCALE	AS SHOWN (A3)	CODE NO S-0256	5/25	10 CLASS ROOM SCHOOL BURNT BRICK IRON SHEET ROOF. With computer lab and labratory
		TECH- APPROVED BY	M.Sc. ENG.AB.MATIN MAQOL	DATE	1393-4-5			DRAWING TITLE: FOUNDATION BEAMS

E

F-B-3(2Nrs)

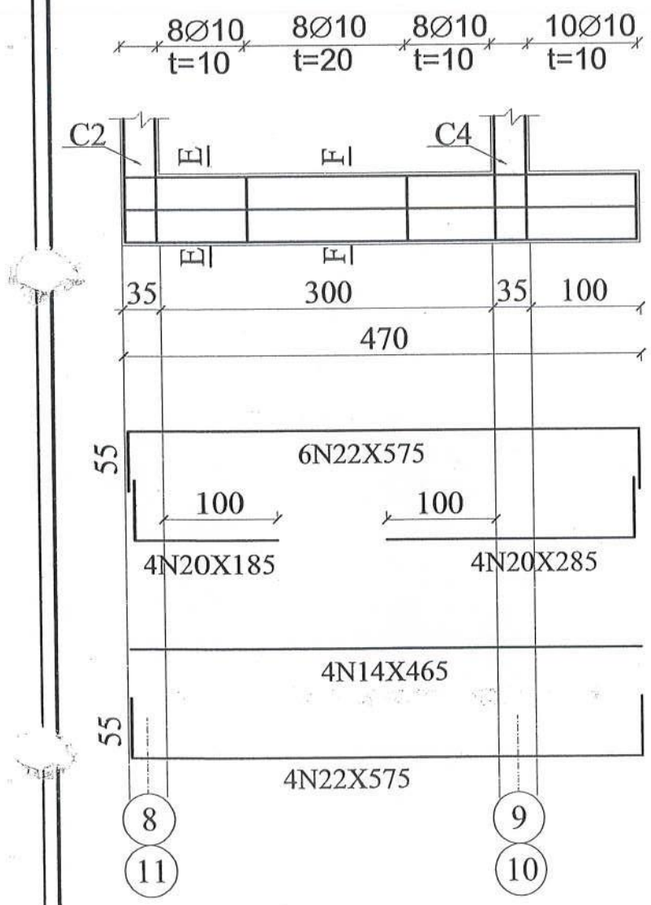

SEC:F-F

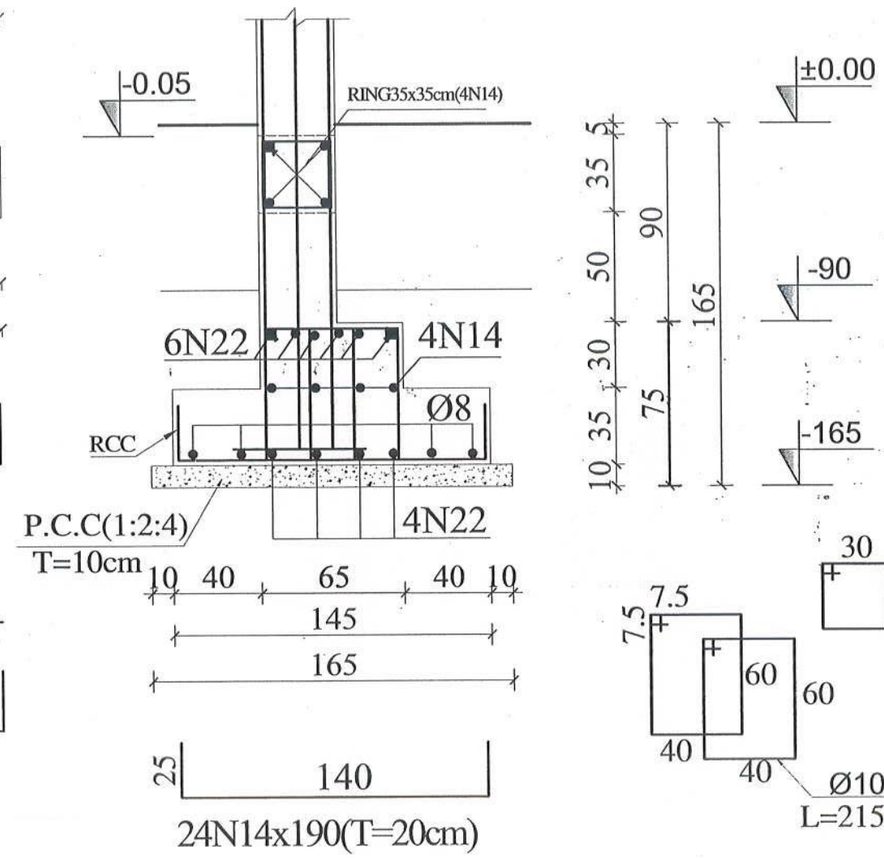

SEC:E-E

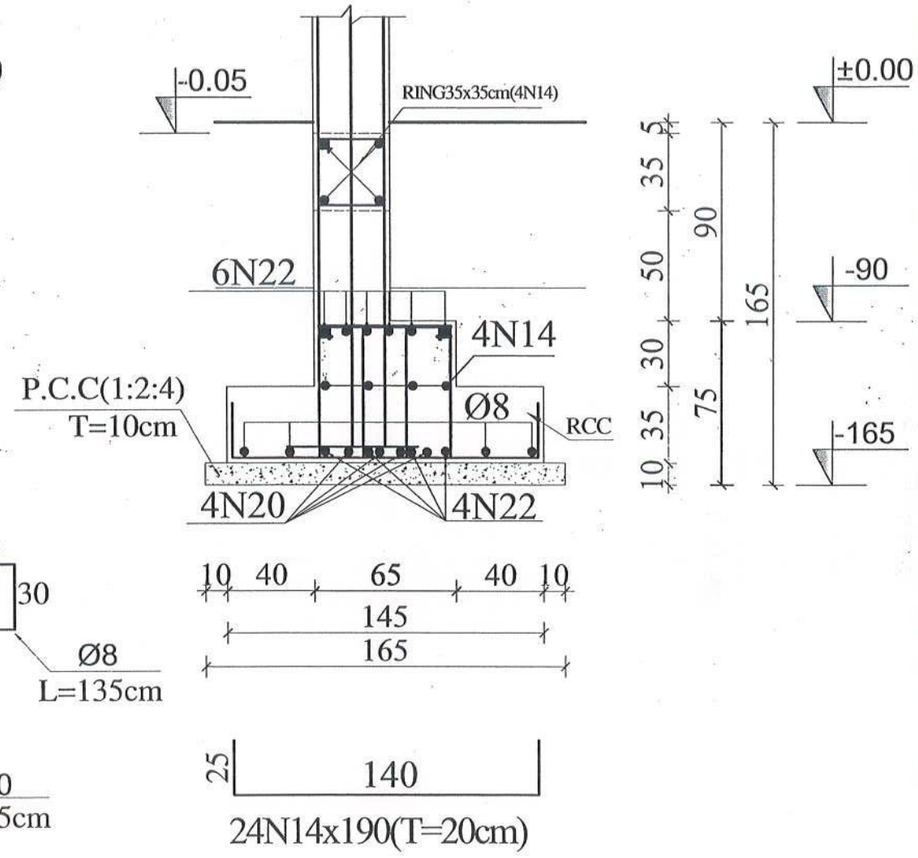

FOUNDATION BEAM 3

MINISTRY OF EDUCATION DEPARTMENT OF CONSTRUCTION	STANDARD SCHOOL DESIGN IN AFGHANISTAN	ARCHITECT/DESIGN	ARCH.FARAH	APPROVED: Doc/Moe	ENG.AB MOMEN RAAD	DRAWING No	STRUCTURAL	PROJECT NAME
		RCC/ DESIGN	M. Sc. ENG.M.RAHIM	SCALE	AS SHOWN (A3)	CODE NO S-0256	6 / 25	DRAWING TITLE
		TECH- APPROVED BY	M.Sc. ENG.AB.MATIN MAQOL	DATE	1393-4-5			10 CLASS ROOM SCHOOL BURNT BRICK IRON SHEET ROOF With computer lab and labratory FOUNDATION BEAM (3)

E

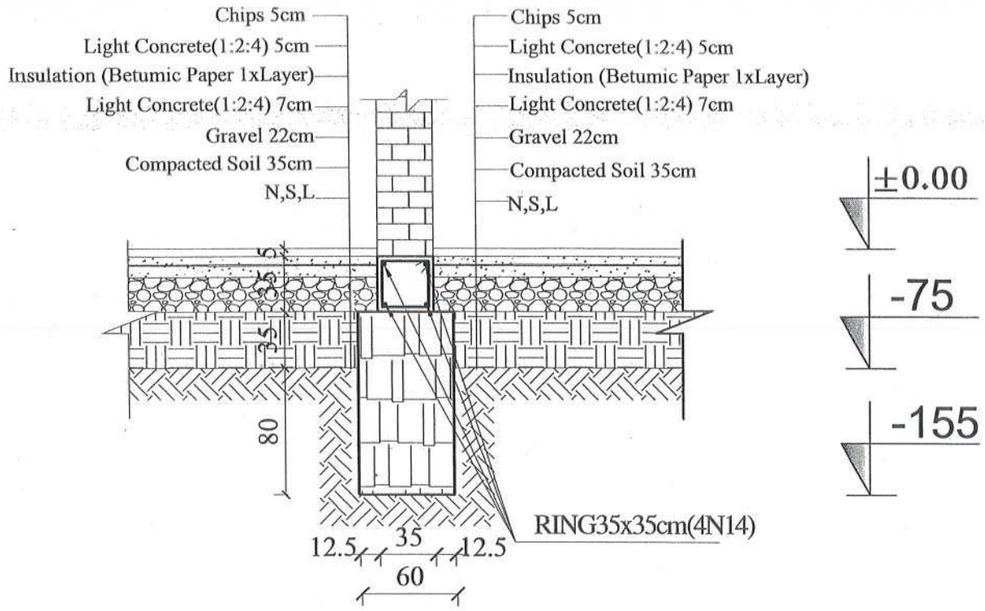

SECH-H

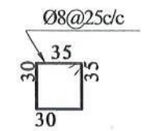

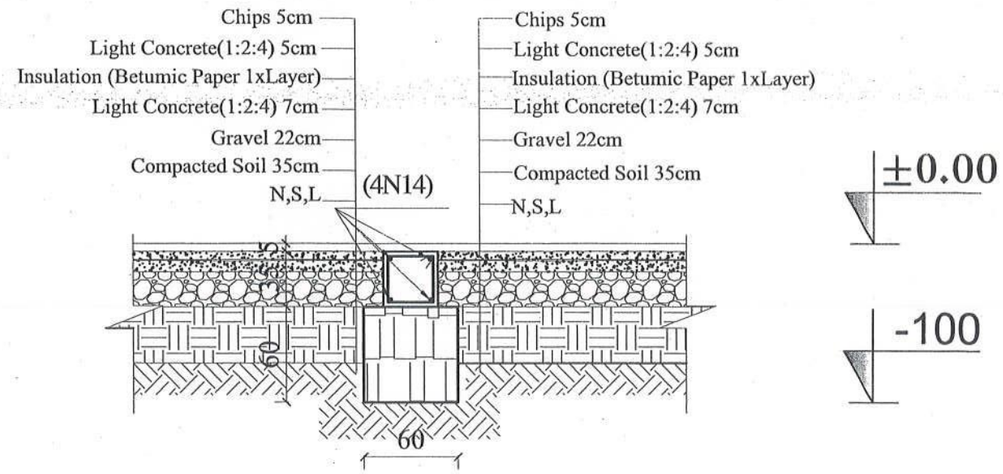

SEC:G-G

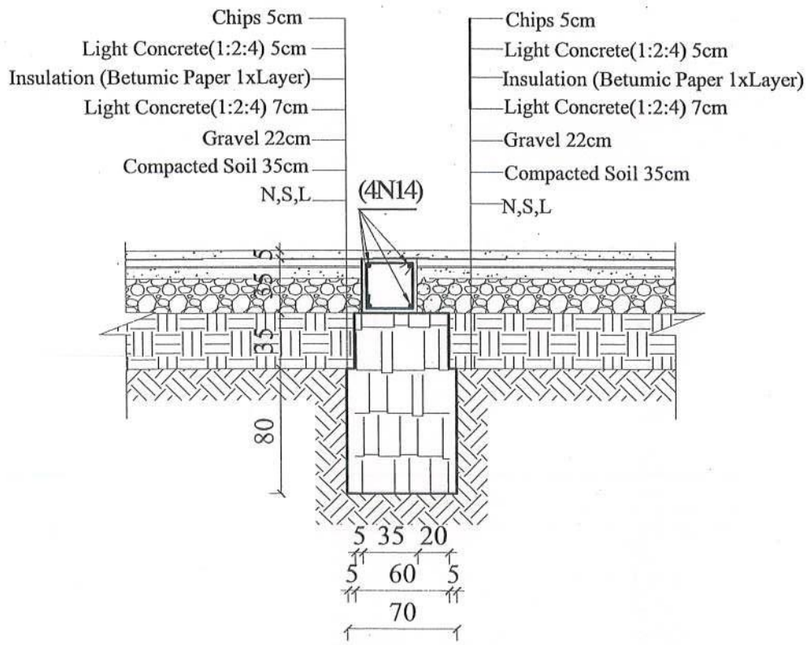

SEC:I-I

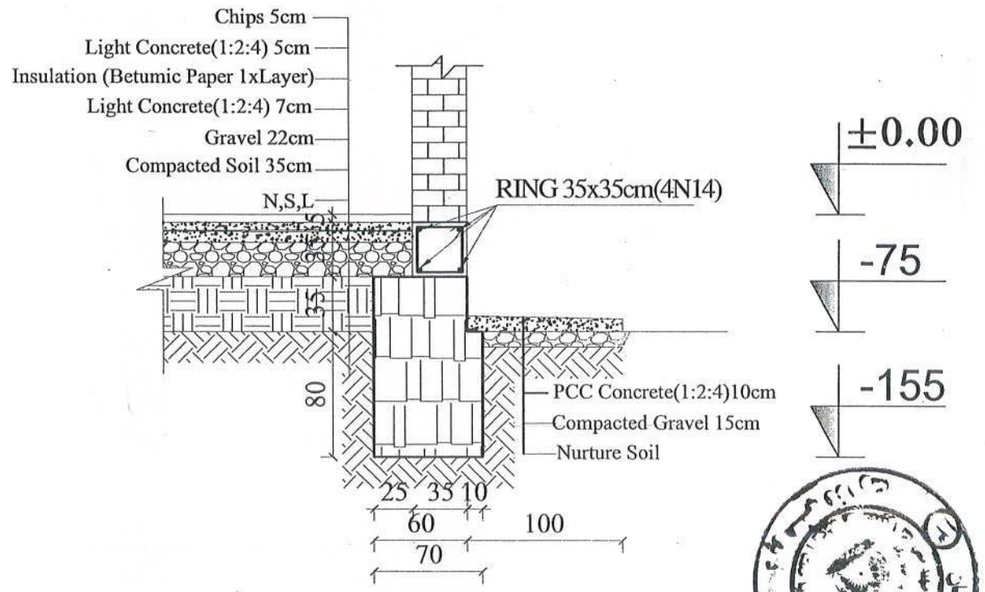

SEC:F-F

MINISTRY OF EDUCATION DEPARTMENT OF CONSTRUCTION	STANDARD SCHOOL DESIGN IN AFGHANISTAN	ARCHITECT/DESIGN	ARCH.FARAH	APPROVED/Doc/Moe	ENG.AB MOMEN RAAD	DRAWING No	STRUCTURAL
		RCC/ DESIGN	M. Sc. ENG.M.RAHIM	SCALE	AS SHOWN (A3)	CODE NO S-0256	7 / 25
		TECH- APPROVED BY	M.Sc. ENG.AB.MATIN MAQOL	DATE	1393-4-5		

PROJECT NAME: 10 CLASS ROOM SCHOOL BURNT BRICK IRON SHEET ROOF With computer lab and labratory

DRAWING TITLE: FOUNDATION DETAILS

E

C-1(40Nrs)

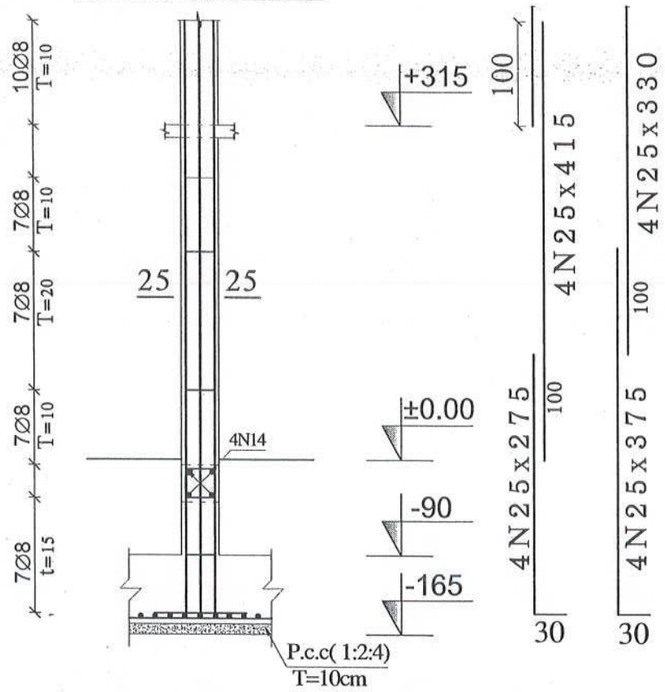

SEC:25-25

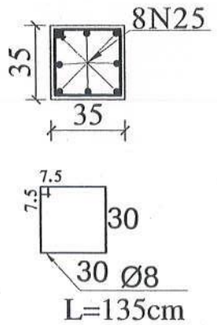

C-2(10Nrs)

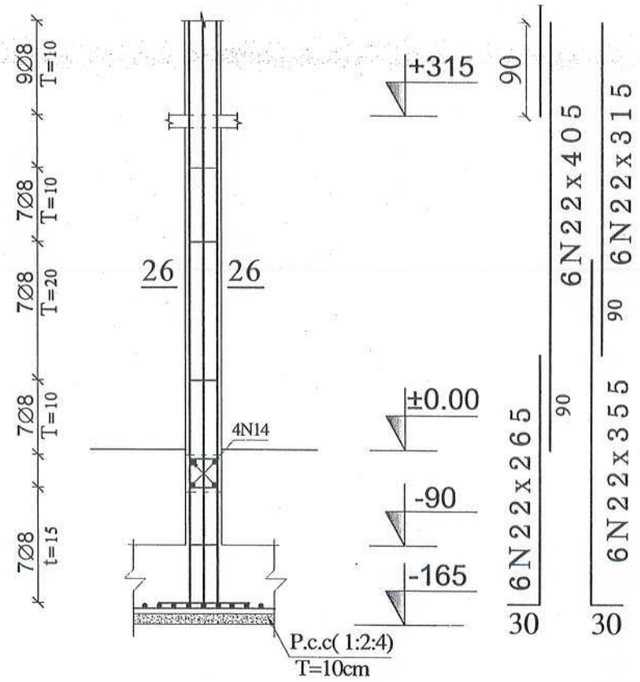

SEC:26-26

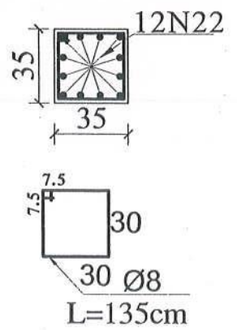

C-3(20Nrs)

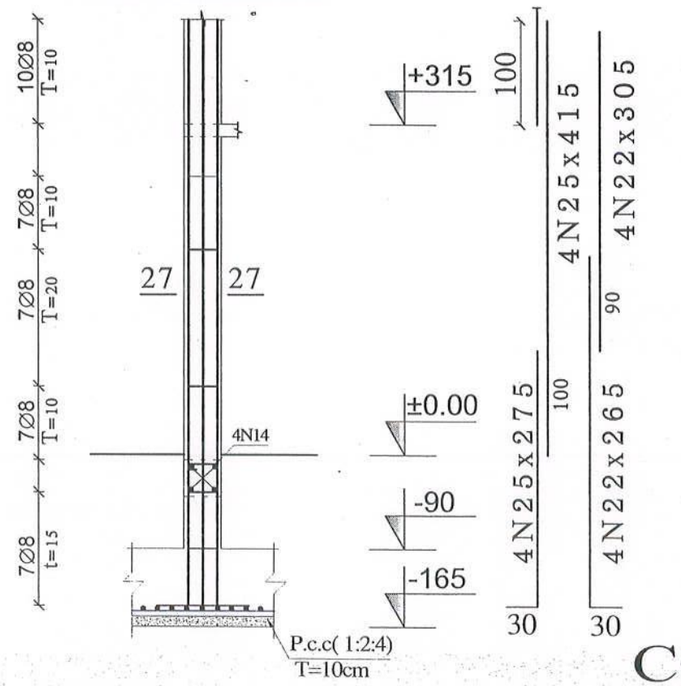

SEC:27-27

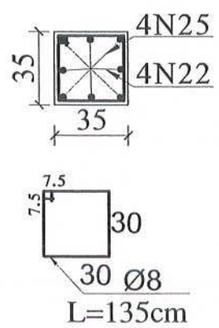

C-4(2Nrs)

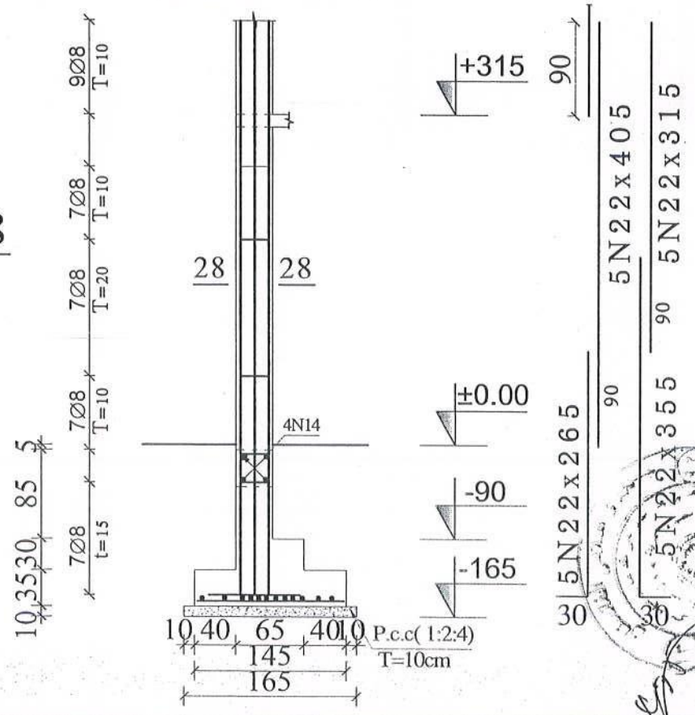

SEC:28-28

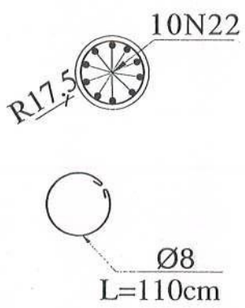

COLUMNS

MINISTRY OF EDUCATION DEPARTMENT OF CONSTRUCTION	STANDARD SCHOOL DESIGN IN AFGHANISTAN	ARCHITECT/DESIGN	ARCH.FARAH	APPROVED: Doe/Moe	ENG.AB MOMEN RAAD	DRAWING No	STRUCTURAL
		RCC/ DESIGN	M. Sc. ENG.M.RAHIM	SCALE	AS SHOWN (A3)	CODE NO S-0236	8/25
		TECH- APPROVED BY	M.Sc. ENG.AB.MATIN MAQOL	DATE	1393-4-5		

PROJECT NAME: 10 CLASS ROOM SCHOOL BURNT BRICK IRON SHEET ROOF With computer lab and labratory

DRAWING TITLE: COLUMNS

E

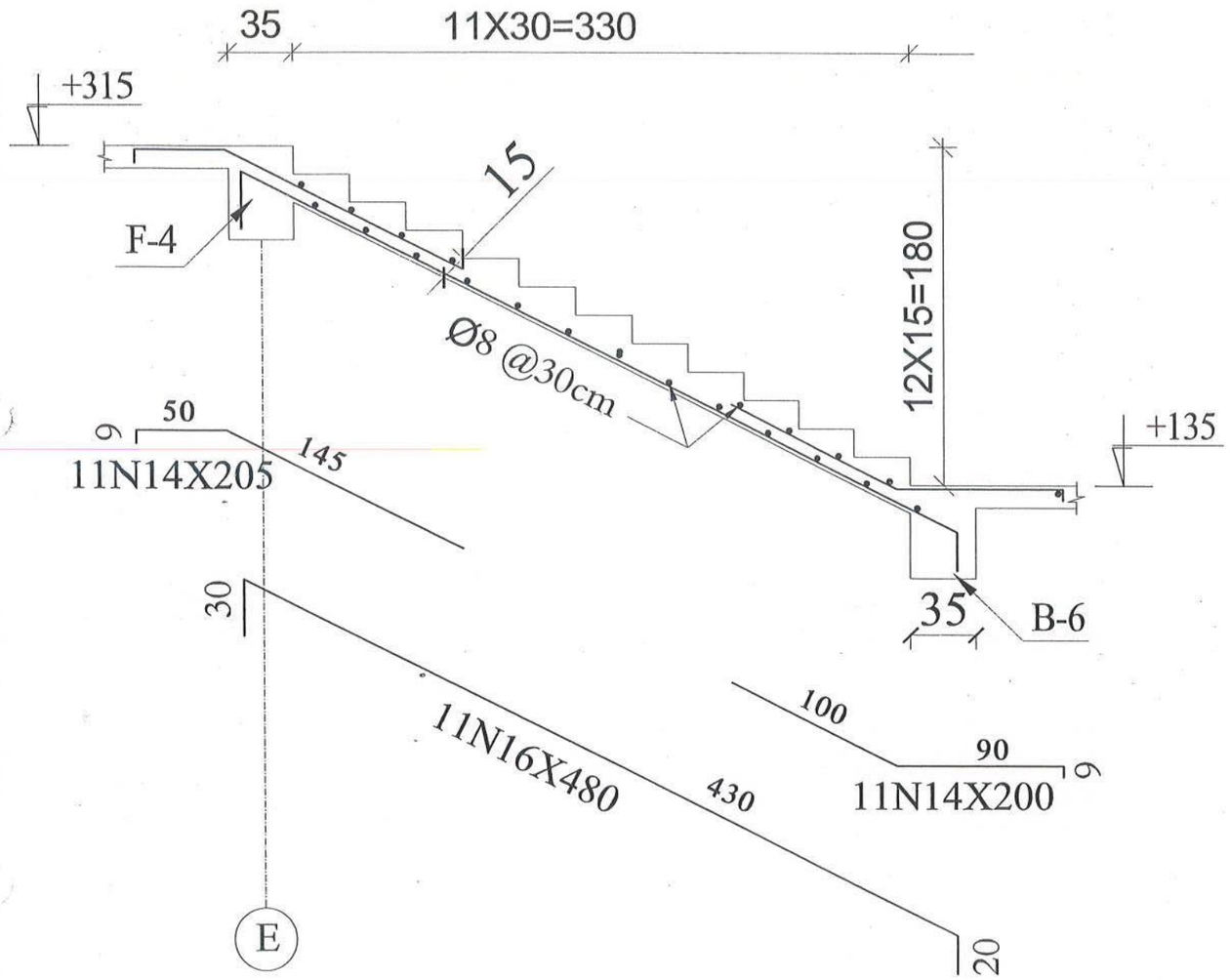

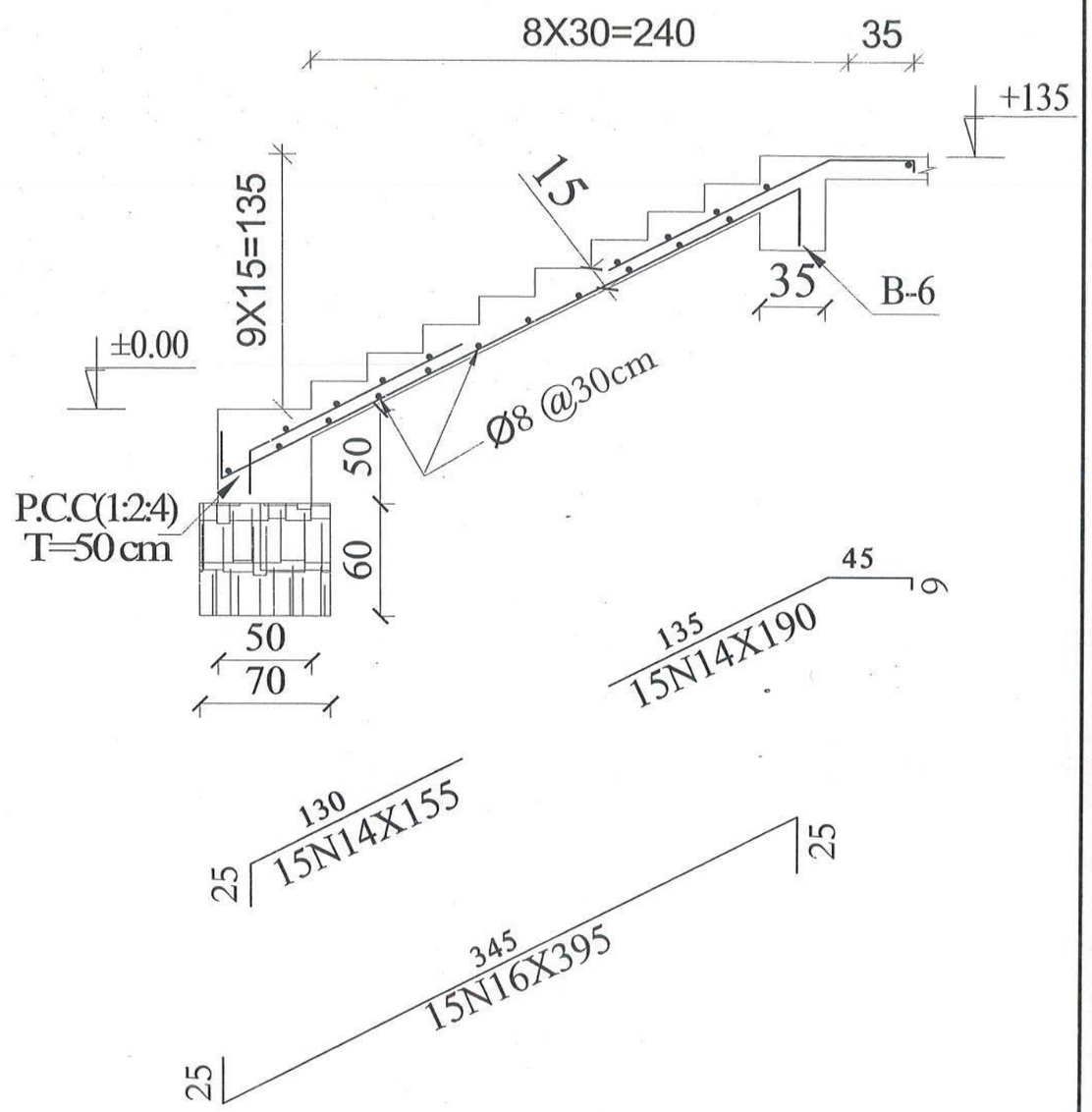

STAIR BAR BENDING

MINISTRY OF EDUCATION DEPARTMENT OF CONSTRUCTION	STANDARD SCHOOL DESIGN IN AFGHANISTAN	ARCHITECT/DESIGN	ARCH.FARAH	APPROVED: Doc/Mue	ENG.AB MOMEN RAAD	DRAWING No	STRUCTURAL	PROJECT NAME
		RCC/ DESIGN	M. Sc. ENG.M.RAHIM	SCALE	AS SHOWN (A3)	CODE NO. S-0256	9 / 25	DRAWING TITLE
		TECH- APPROVED BY	M.Sc. ENG.AB.MATIN MAQOL	DATE	1393-4-5			10 CLASS ROOM SCHOOL BURNT BRICK IRON SHEET ROOF With computer lab and labratory STAIR BAR BENDING

E

SEC: 2-2

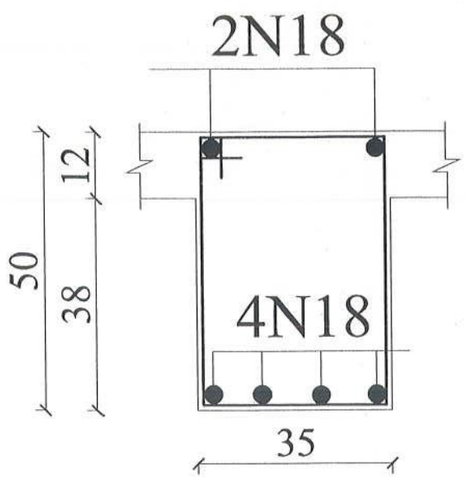

SEC: 1-1

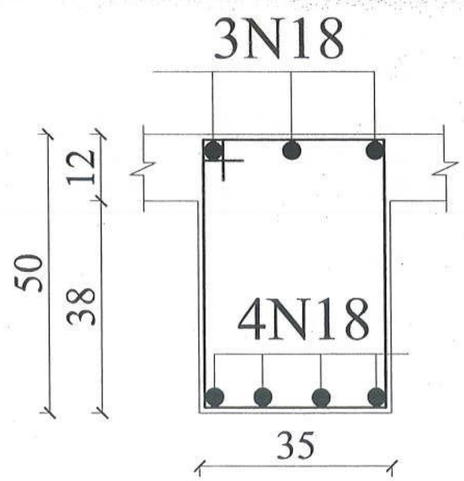

B-2 (1Nrs)

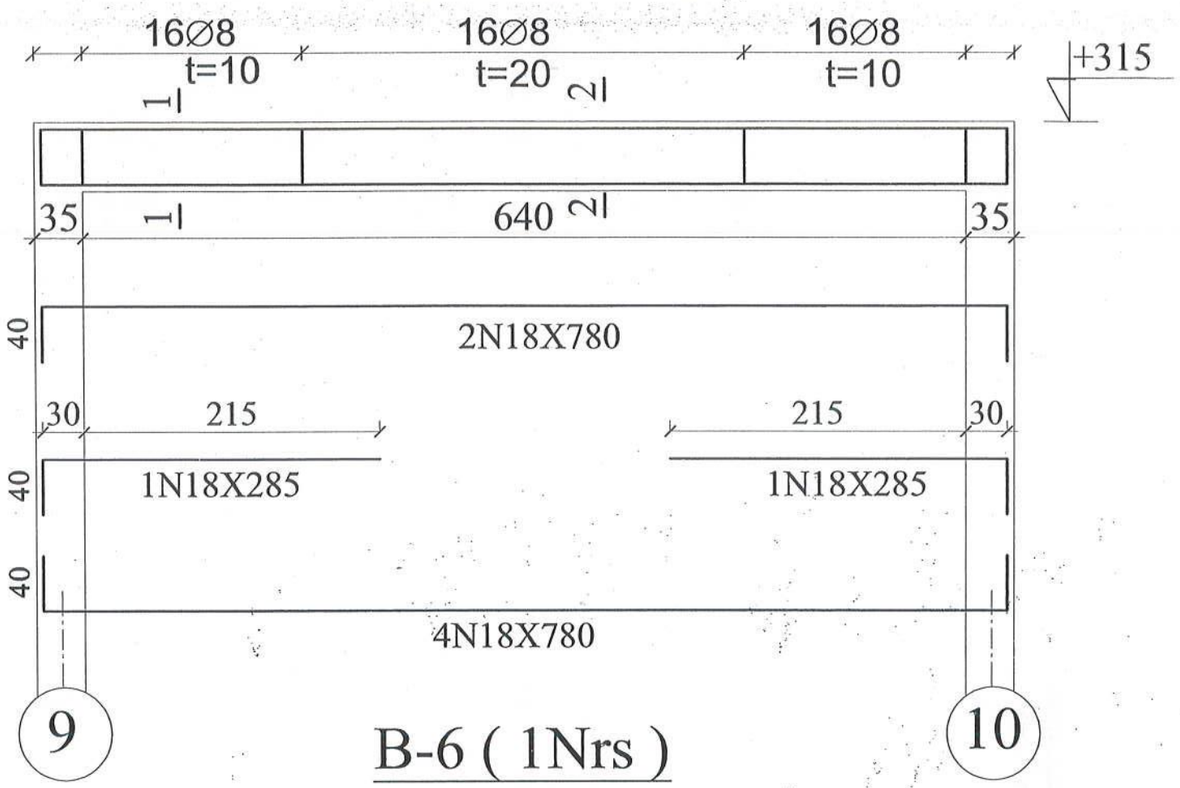

SEC:3-3

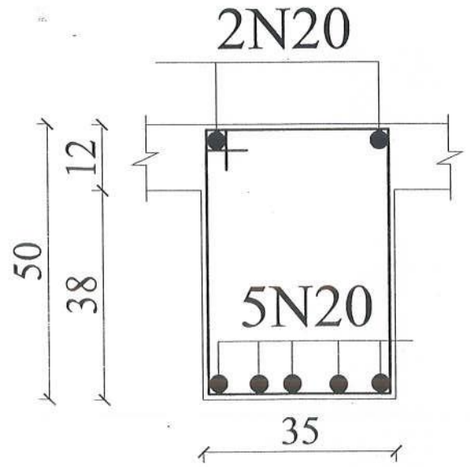

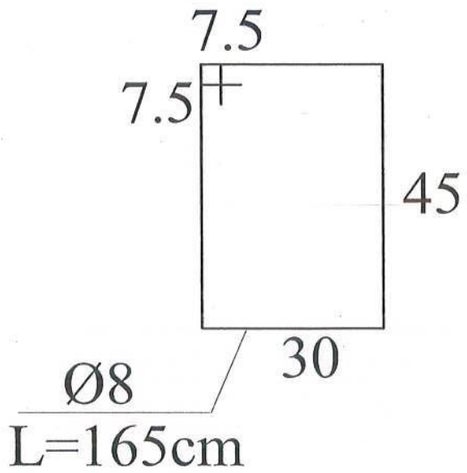

B-6 (1Nrs)

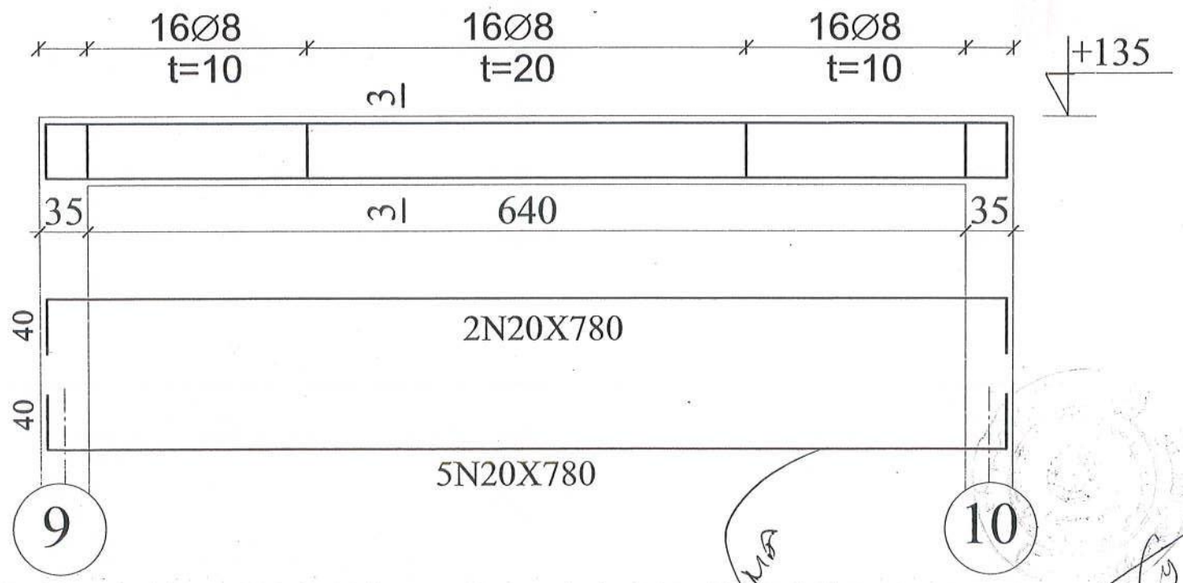

MINISTRY OF EDUCATION DEPARTMENT OF CONSTRUCTION	STANDARD SCHOOL DESIGN IN AFGHANISTAN	ARCHITECT/DESIGN	ARCH.FARAH	APPROVED Doc/Moe	ENG.AB MOMEN RAAD	DRAWING No	STRUCTURAL
		RCC/ DESIGN	M. Sc. ENG.M.RAHIM	SCALE	AS SHOWN (A3)	CODE NO S-0256	10 / 25
		TECH- APPROVED BY	M.Sc. ENG.AB.MATIN MAQOL	DATE	1393-4-5		

PROJECT NAME	
DRAWING TITLE	10 CLASS ROOM SCHOOL BURNT BRICK IRON SHEET ROOF With computer lab and labratory BEAMS (1-6)

E

DETAIL:P

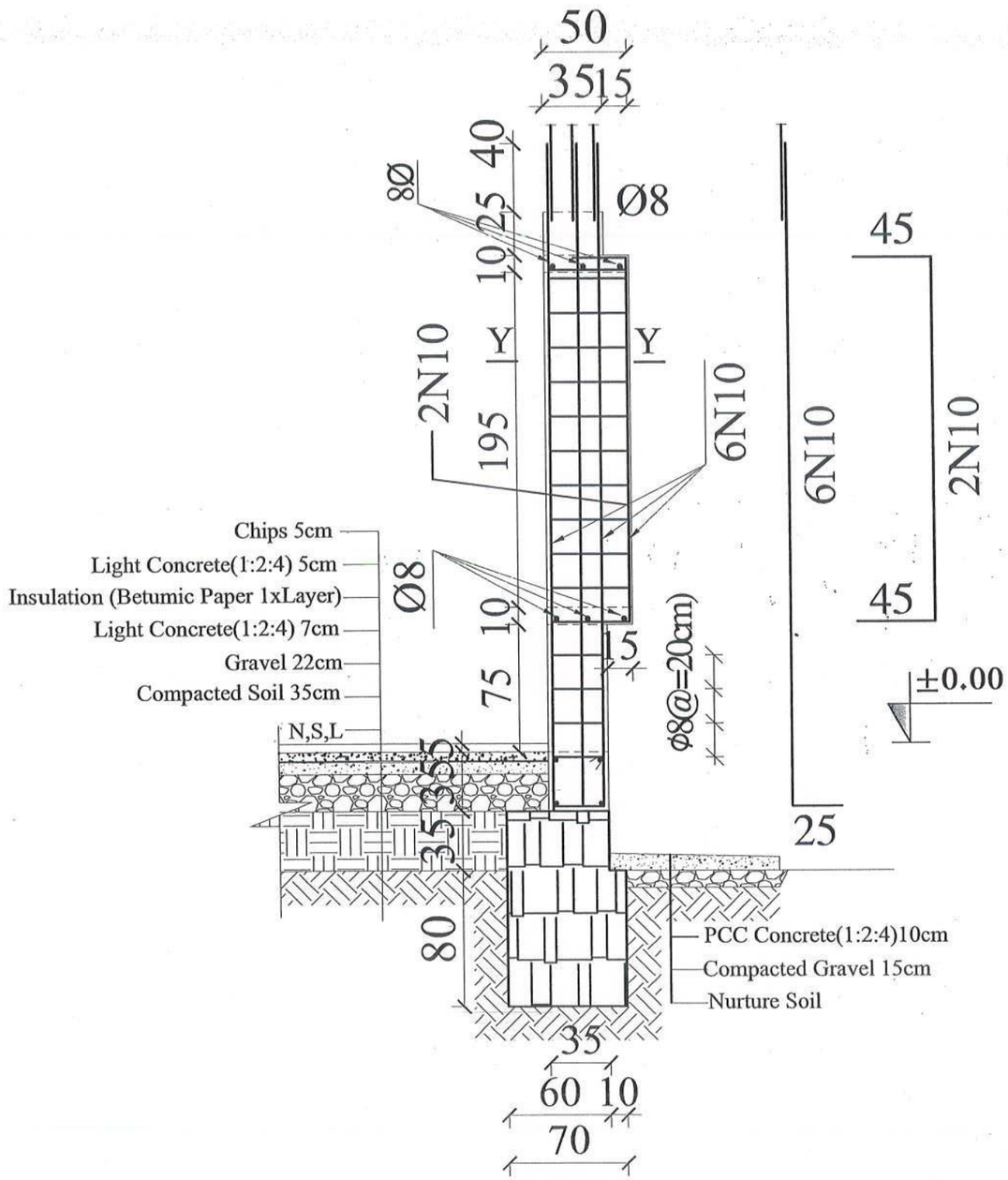

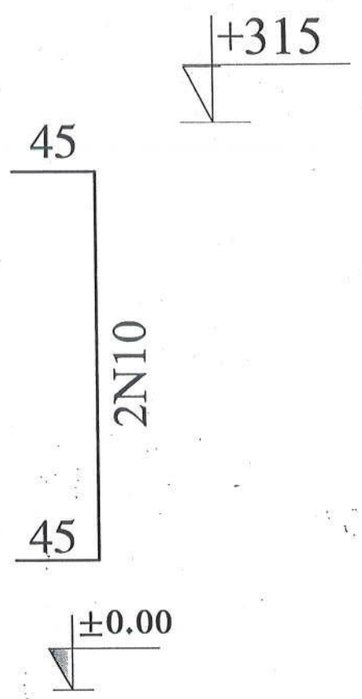

DETAIL:W

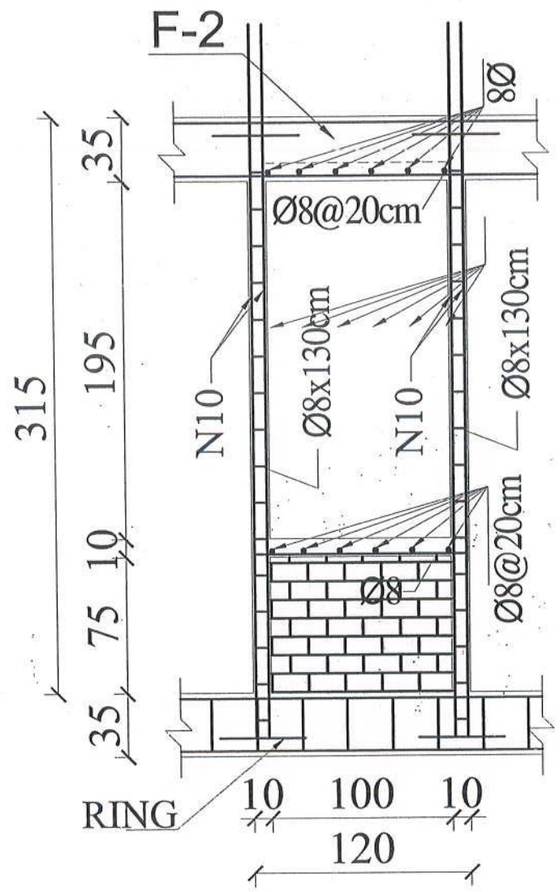

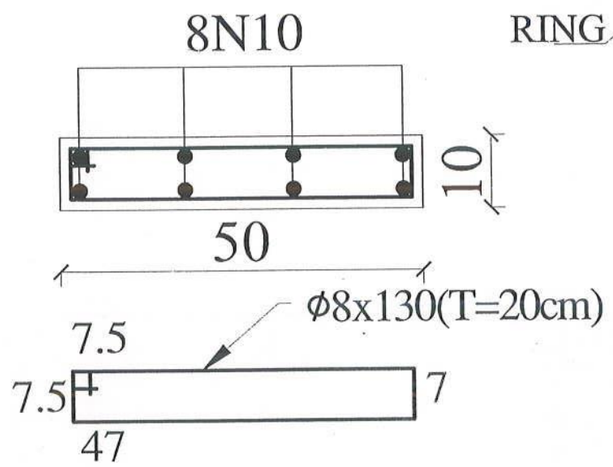

SEC:Y-Y

MINISTRY OF EDUCATION DEPARTMENT OF CONSTRUCTION	STANDARD SCHOOL DESIGN IN AFGHANISTAN	ARCHITECT/DESIGN	ARCH.FARAH	APPROVED:Doc/Moe	ENG.AB MOMEN RAAD	DRAWING No	STRUCTURAL	PROJECT NAME	
		RCC/ DESIGN	M. Sc. ENG.M.RAHIM	SCALE	AS SHOWN (A3)	CODE NO S-0256	11/25	DRAWING TITLE	10 CLASS ROOM SCHOOL BURNT BRICK IRON SHEET ROOF With computer lab and labratory DETAILS
		TECH- APPROVED BY	M.Sc. ENG.AB.MATIN MAQOL	DATE	1393-4-5				E

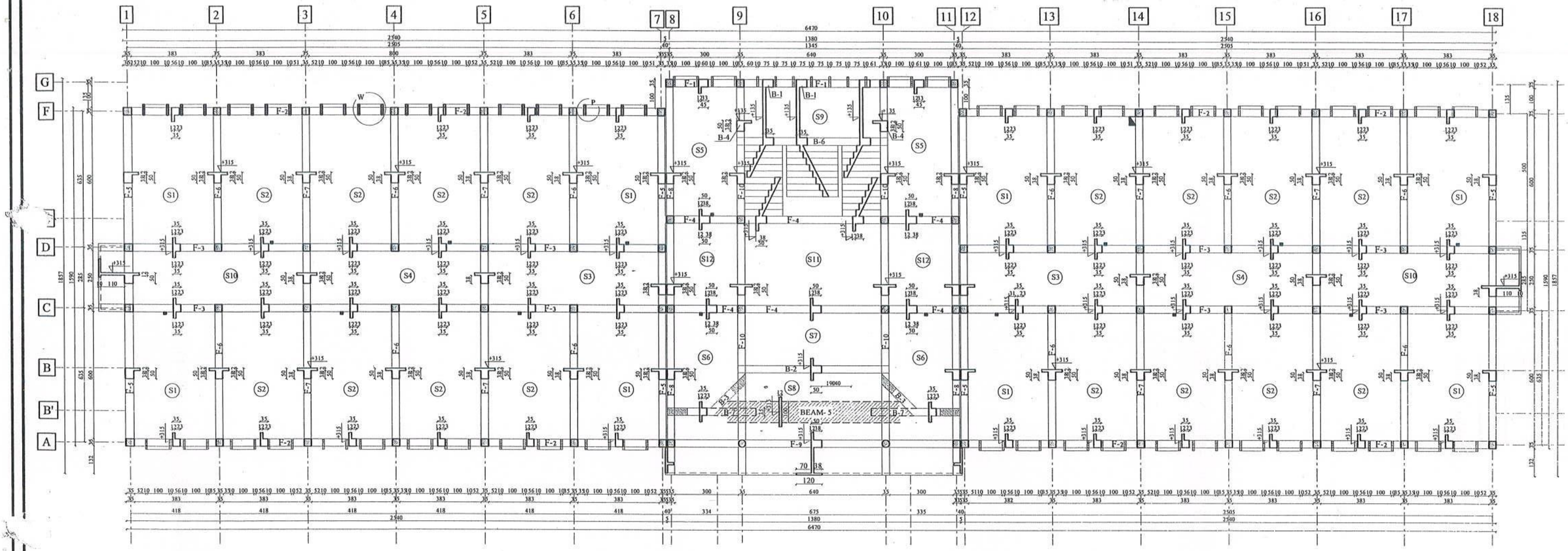

SHUTTERING PLAN FOR GROUND FLOOR SLAB

MINISTRY OF EDUCATION DEPARTMENT OF CONSTRUCTION	STANDARD SCHOOL DESIGN IN AFGHANISTAN	ARCHITECT/DESIGN	ARCH.FARAH	APPROVED:Doc/Moe	ENG.AB MOMEN RAAD	DRAWING No	STRUCTURAL
		RCC/ DESIGN	M. Sc. ENG.M.RAHIM	SCALE	AS SHOWN (A3)	CODE NO S-0256	12/25
		TECH- APPROVED BY	M.Sc. ENG.AB.MATIN MAQOL	DATE	1393-4-5		

PROJECT NAME: 10 CLASS ROOM SCHOOL BURNT BRICK IRON SHEET ROOF With computer lab and labratory

DRAWING TITLE: GROUND FLOOR SHUTTERING PLAN

E

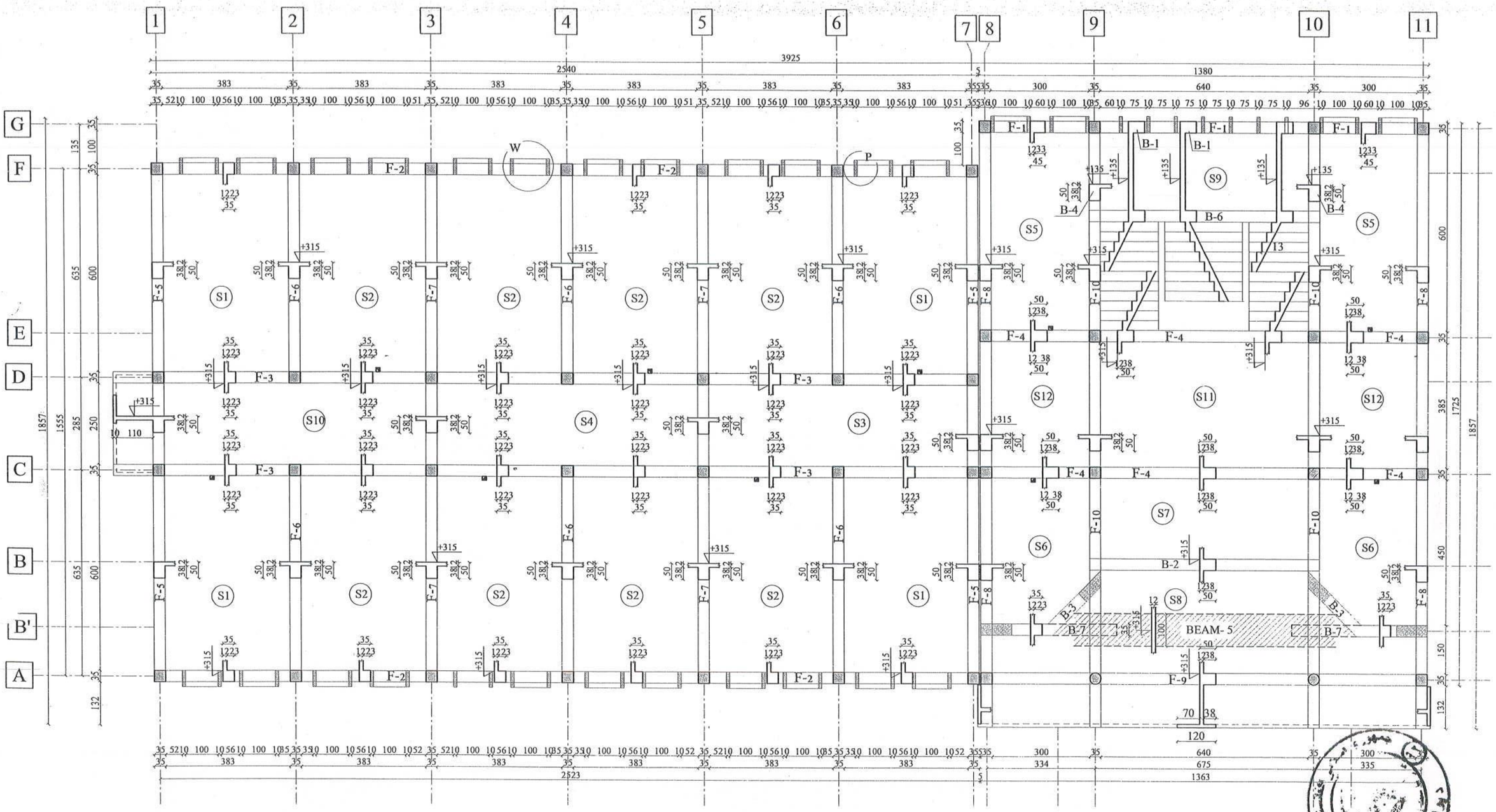

SHUTTERING PLAN FOR GROUND FLOOR SLAB

MINISTRY OF EDUCATION DEPARTMENT OF CONSTRUCTION	STANDARD SCHOOL DESIGN IN AFGHANISTAN	ARCHITECT/DESIGN	ARCH.FARAH	APPROVED: Doc/Moe	ENG.AB MOMEN RAAD	DRAWING No	STRUCTURAL
		RCC/ DESIGN	M. Sc. ENG.M.RAHIM	SCALE	AS SHOWN (A3)	CODE NO S-0256	13 / 25
		TECH- APPROVED BY	M.Sc. ENG.AB.MATIN MAQOL	DATE	1393-4-5		

PROJECT NAME: 10 CLASS ROOM SCHOOL BURNT BRICK IRON SHEET ROOF. With computer lab and labratory

DRAWING TITLE: GROUND FLOOR SHUTTERING PLAN

E

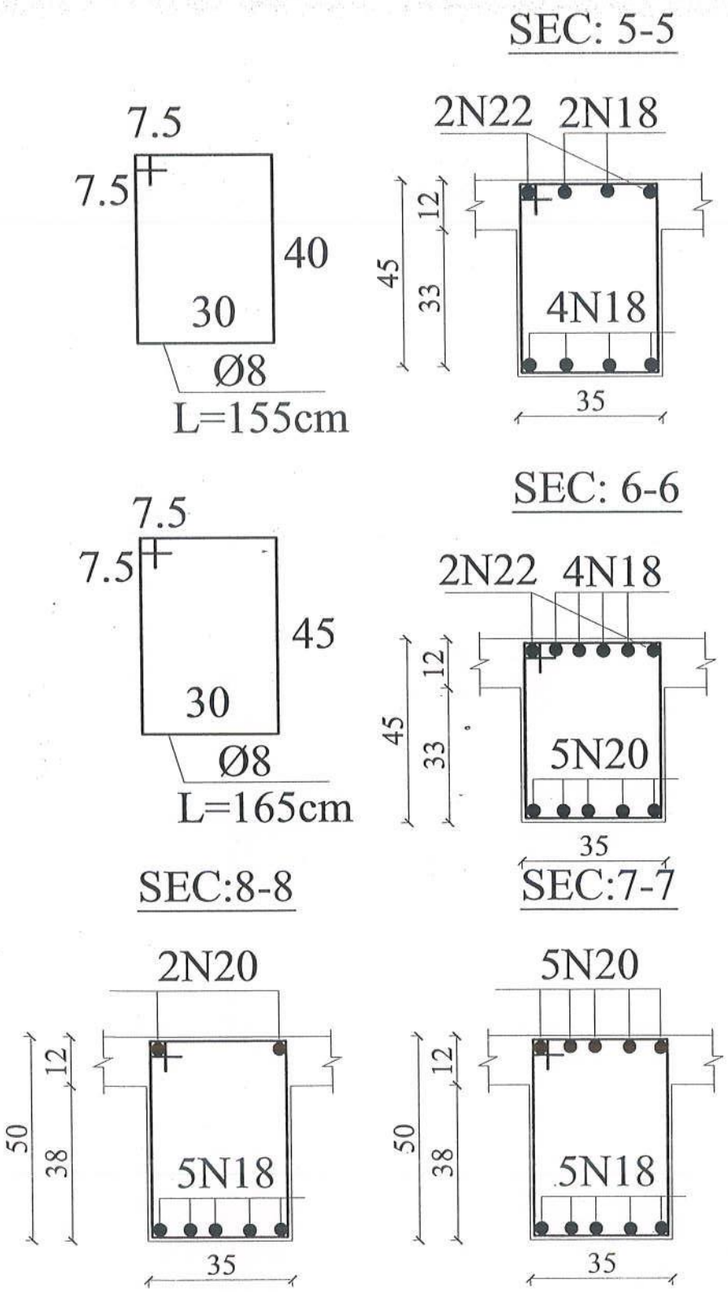

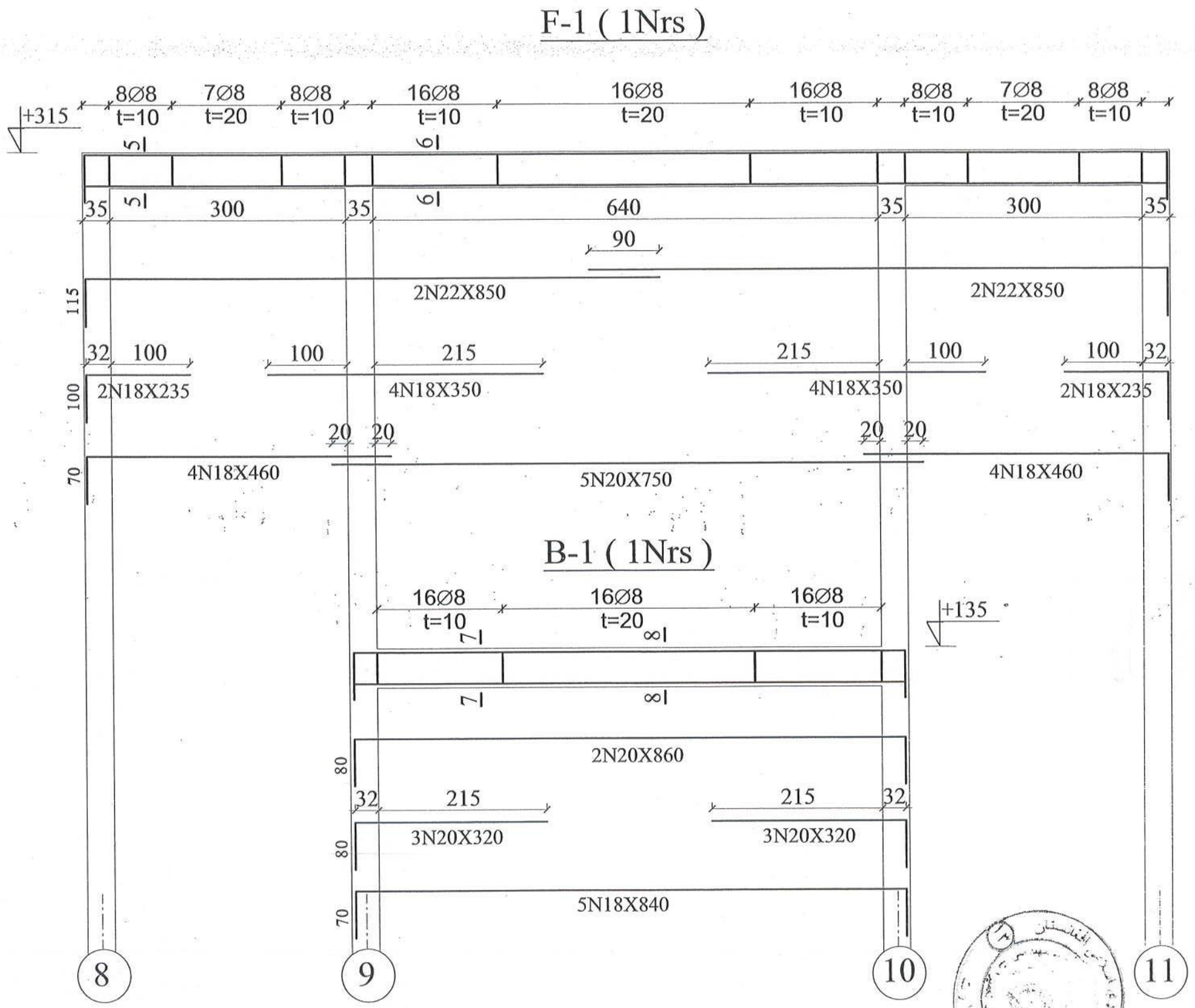

MINISTRY OF EDUCATION DEPARTMENT OF CONSTRUCTION	STANDARD SCHOOL DESIGN IN AFGHANISTAN	ARCHITECT/DESIGN: ARCH.FARAH	APPROVED: Doc/Moe: ENG.AB MOMEN RAAD	DRAWING No: STRUCTURAL	PROJECT NAME		
		RCC/ DESIGN: M. Sc. ENG.M.RAHIM	SCALE: AS SHOWN (A1)	CODE NO S-0256	14 / 25	DRAWING TITLE: 10 CLASS ROOM SCHOOL BURNT BRICK IRON SHEET ROOF With computer lab and labratory FRAME (1) and BEAM (1)	E
		TECH- APPROVED BY: M.Sc. ENG.AB.MATIN MAQOL	DATE: 1393-4-5				

F-2 (4Nrs)

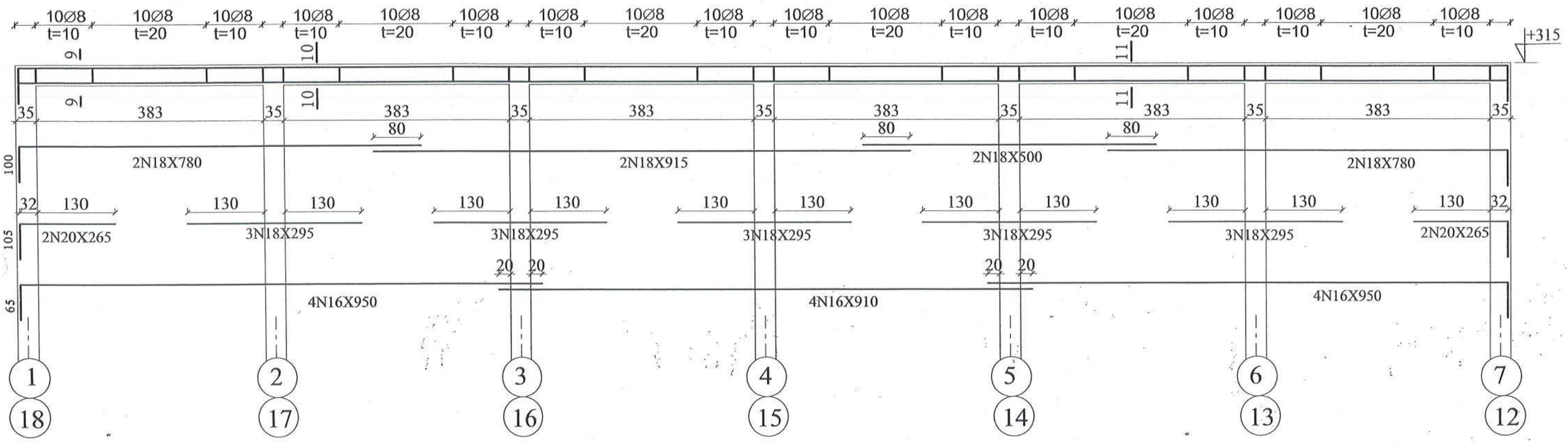

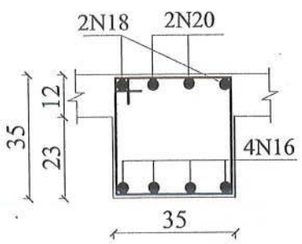

SEC:9-9

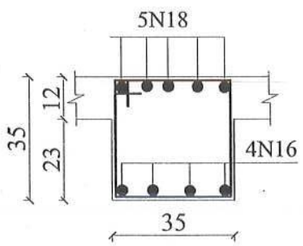

SEC:10-10

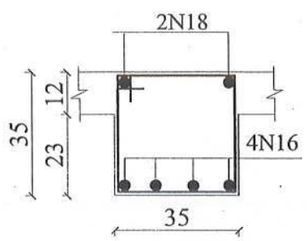

SEC:11-11

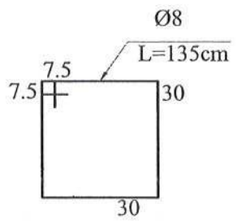

MINISTRY OF EDUCATION DEPARTMENT OF CONSTRUCTION	STANDARD SCHOOL DESIGN IN AFGHANISTAN	ARCHITECT/DESIGN	ARCH.FARAH	APPROVED: Doc/Moe	ENG.AB MOMEN RAAD	DRAWING No	STRUCTURAL
		RCC/ DESIGN	M. Sc. ENG.M.RAHIM	SCALE	AS SHOWN (A3)	CODE NO S-0256	15 / 25
		TECH- APPROVED BY	M.Sc. ENG.AB.MATIN MAQOL	DATE	1393-4-5		

PROJECT NAME

DRAWING TITLE: 10 CLASS ROOM SCHOOL BURNT BRICK IRON SHEET ROOF With computer lab and labratory FRAME : (2)

E

F-3(4Nrs)

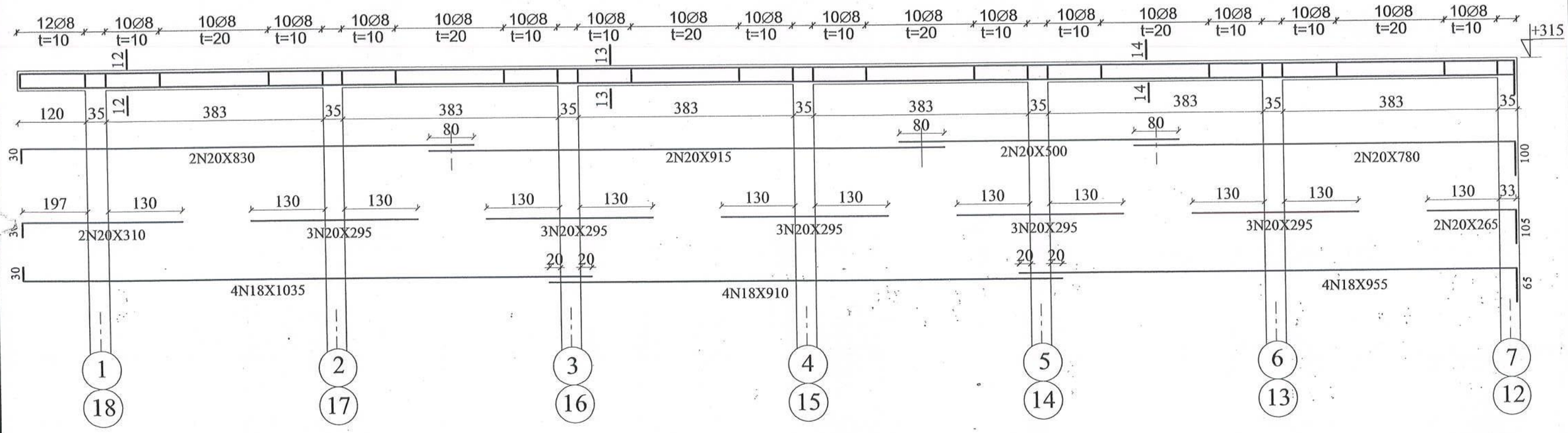

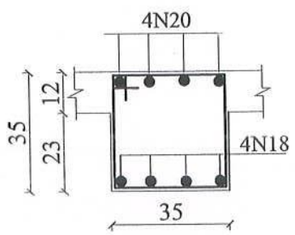

SEC:12-12

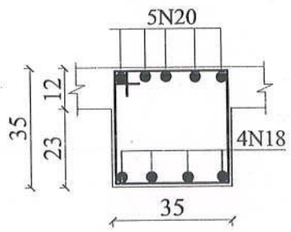

SEC:13-13

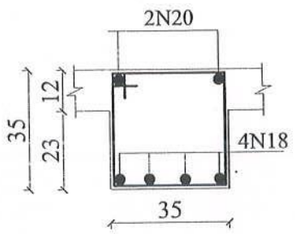

SEC:14-14

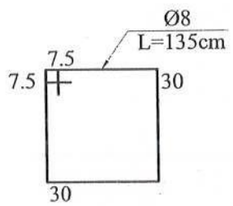

MINISTRY OF EDUCATION DEPARTMENT OF CONSTRUCTION	STANDARD SCHOOL DESIGN IN AFGHANISTAN	ARCHITECT/DESIGN	ARCH.FARAH	APPROVED/Doc/Moe	ENG.AB MOMEN RAAD	DRAWING No	STRUCTURAL
		RCC/ DESIGN	M. Sc. ENG.M.RAHIM	SCALE	AS SHOWN (A3)	CODE NO S-0256	16 / 25
		TECH- APPROVED BY	M.Sc. ENG.AB.MATIN MAQOL	DATE	1393-4-5		

PROJECT NAME: 10 CLASS ROOM SCHOOL BURNT BRICK IRON SHEET ROOF With computer lab and labratory FRAME: (3)

DRAWING TITLE

E

F-4 (2Nrs)

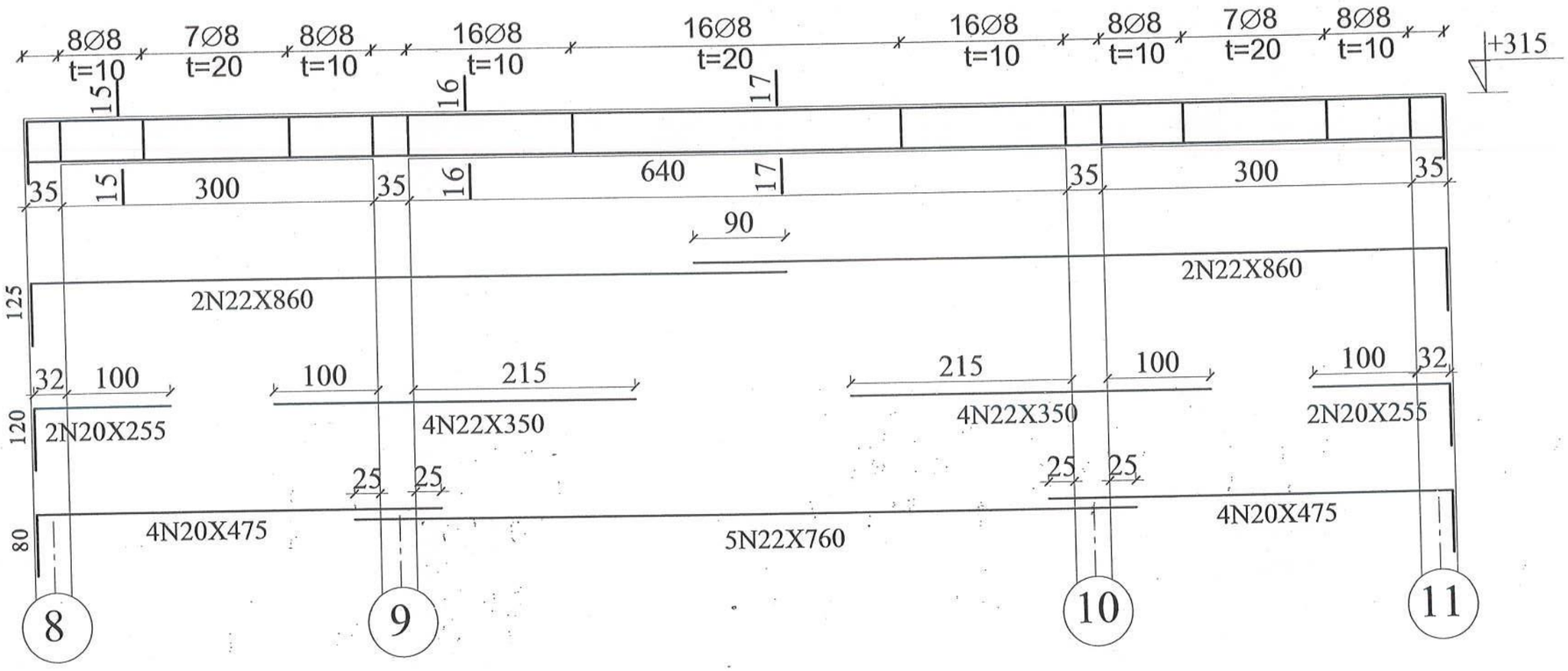

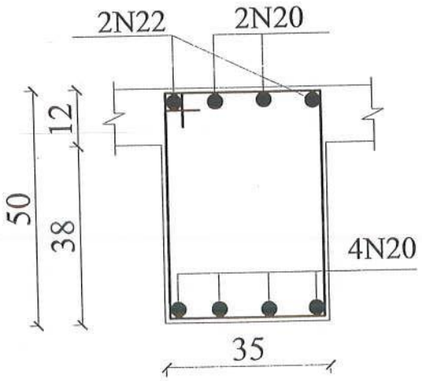

SEC:15-15

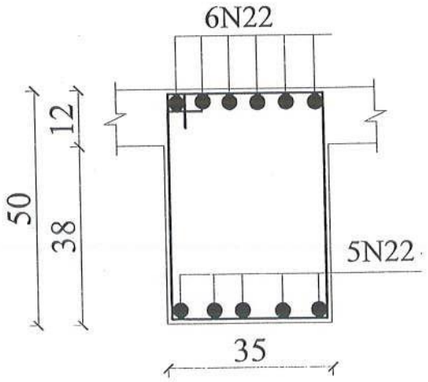

SEC:16-16

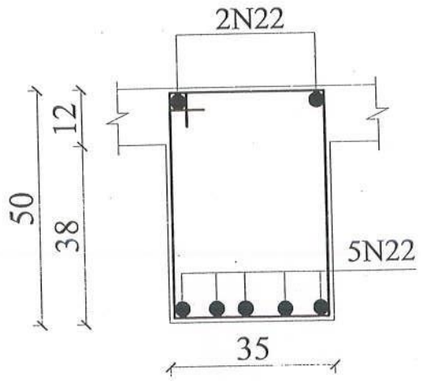

SEC:17-17

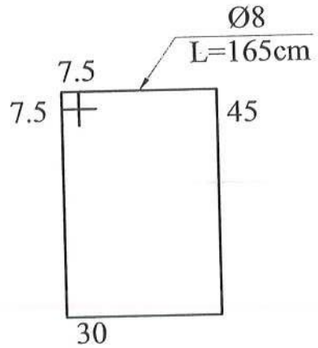

MINISTRY OF EDUCATION DEPARTMENT OF CONSTRUCTION	STANDARD SCHOOL DESIGN IN AFGHANISTAN	ARCHITECT/DESIGN	ARCH.FARAH	APPROVED:Doc/Moe	ENG.AB MOMEN RAAD	DRAWING No	STRUCTURAL	PROJECT NAME
		RCC/ DESIGN	M. Sc. ENG.M.RAHIM	SCALE	AS SHOWN (A3)	CODE NO S-0256	17/25	DRAWING TITLE: 10 CLASS ROOM SCHOOL BURNT BRICK IRON SHEET ROOF With computer lab and labratory FRAME : (4)
		TECH- APPROVED BY	M.Sc. ENG.AB.MATIN MAQOL	DATE	1393-4-5			E

F-5 (4Nrs)

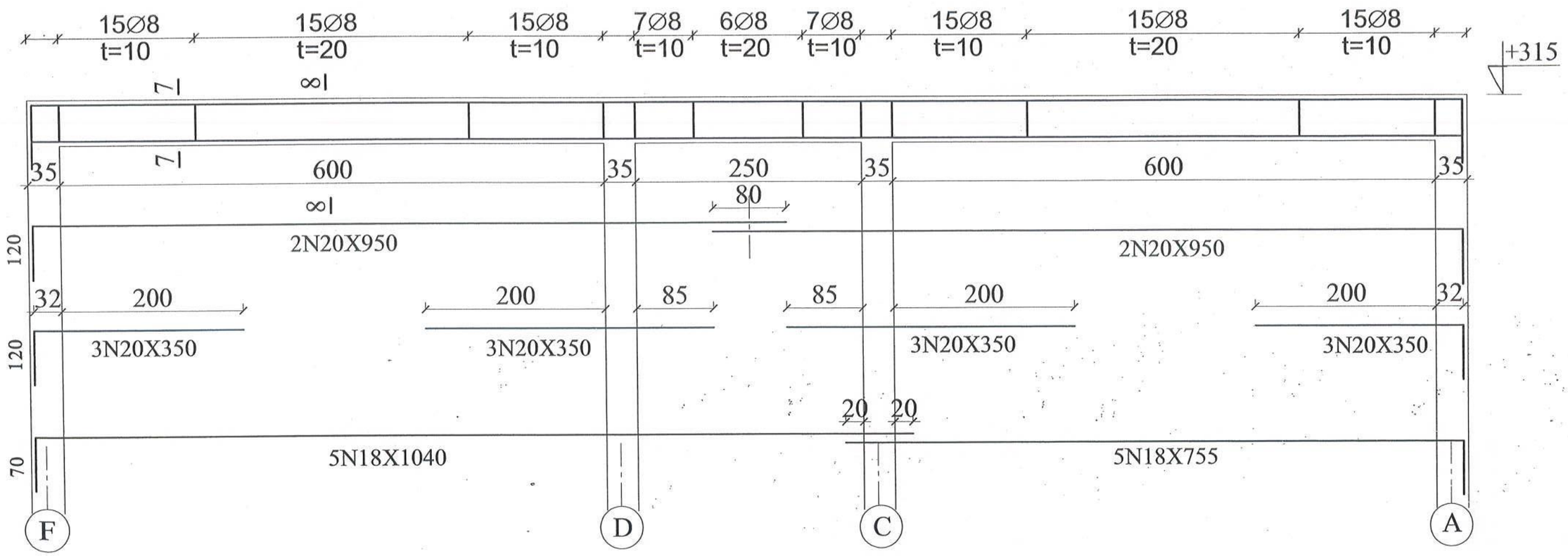

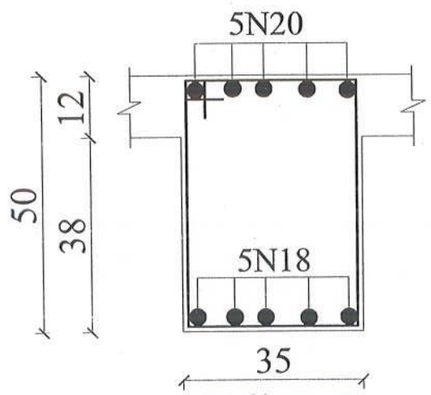

SEC:7-7

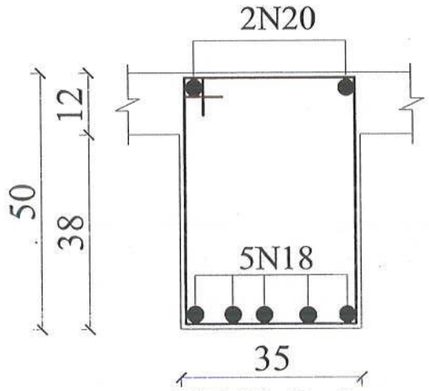

SEC:8-8

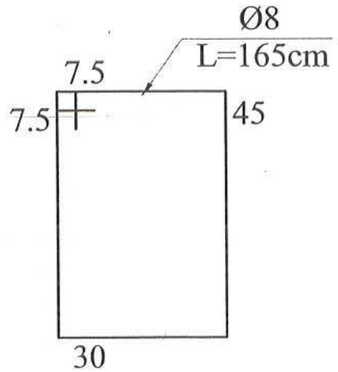

MINISTRY OF EDUCATION DEPARTMENT OF CONSTRUCTION	STANDARD SCHOOL DESIGN IN AFGHANISTAN	ARCHITECT/DESIGN	ARCH.FARAH	APPROVED: Doc/Moe	ENG.AB MOMEN RAAD	DRAWING No	STRUCTURAL	PROJECT NAME
		RCC/ DESIGN	M. Sc. ENG.M.RAHIM	SCALE	AS SHOWN (A3)	CODE NO S-0256	18 / 25	DRAWING TITLE: 10 CLASS ROOM SCHOOL BURNT BRICK IRON SHEET ROOF With computer lab and labratory FRAME : (5)
		TECH- APPROVED BY	M.Sc. ENG.AB.MATIN MAQOL	DATE	1393-4-5			E

F-9(1Nrs)

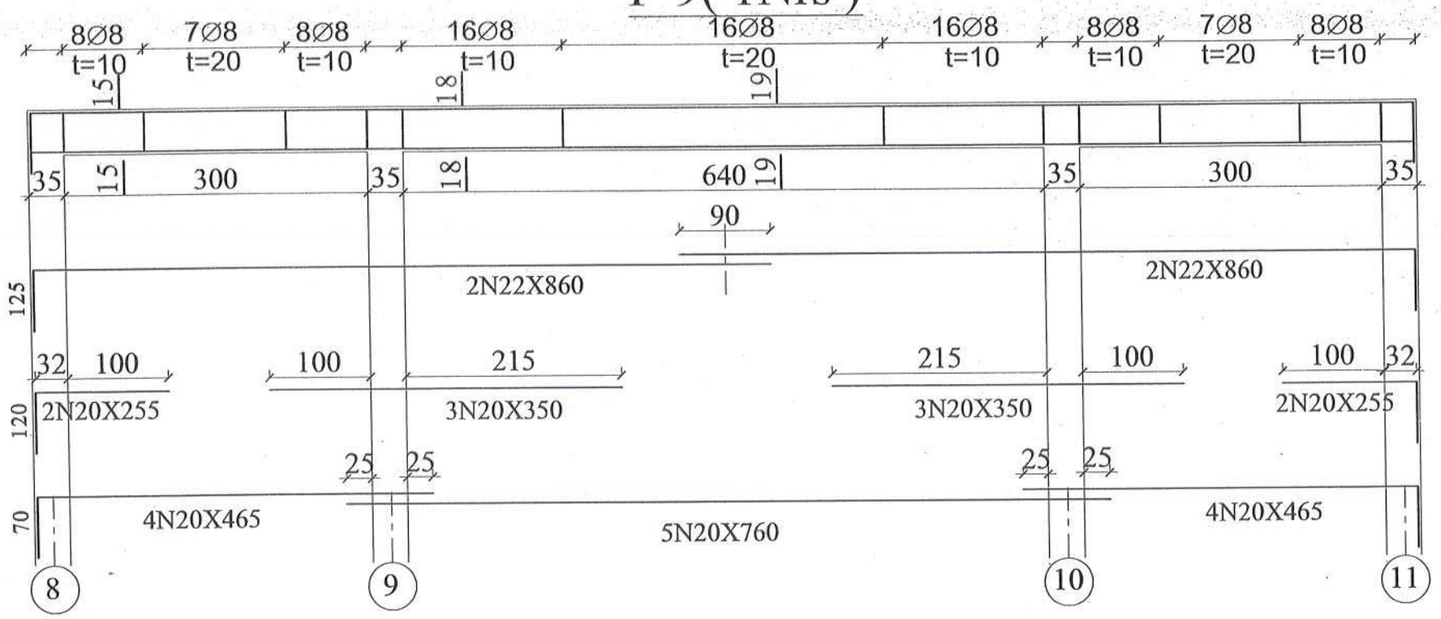

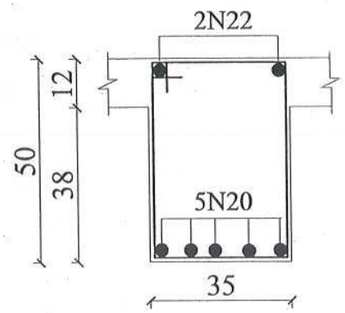

SEC:19-19

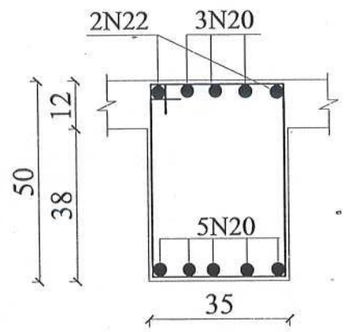

SEC:20-20

F-6 (12Nrs)

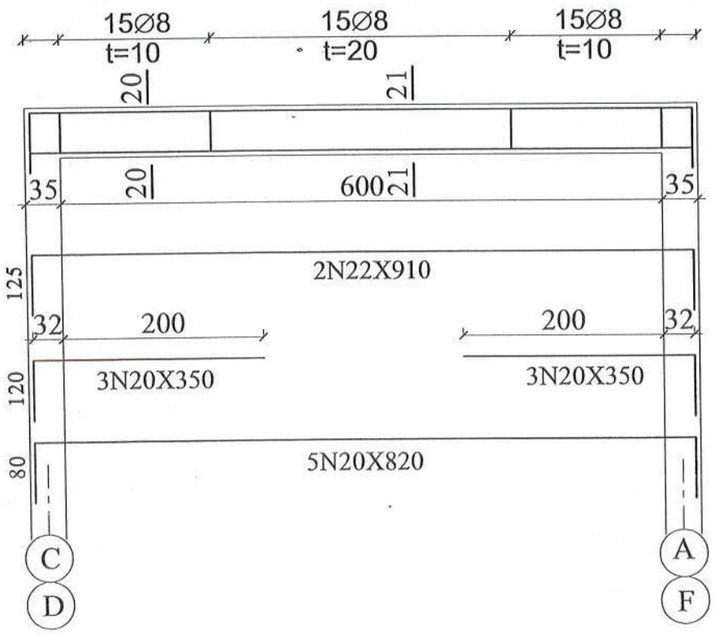

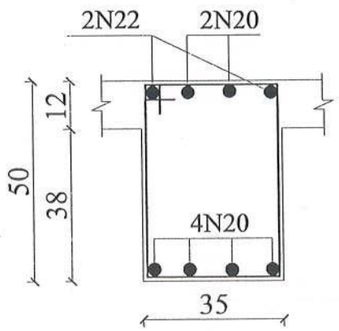

SEC:15-15

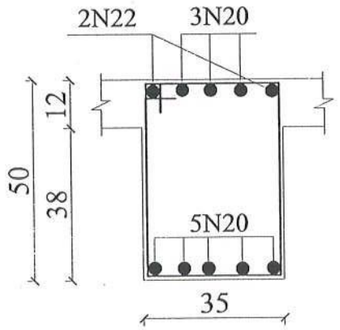

SEC:18-18

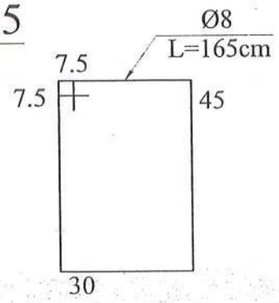

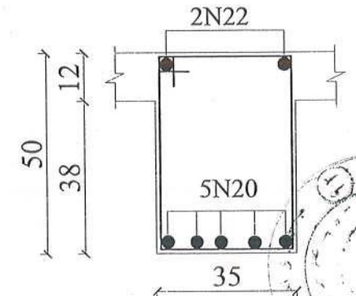

SEC:21-21

MINISTRY OF EDUCATION DEPARTMENT OF CONSTRUCTION	STANDARD SCHOOL DESIGN IN AFGHANISTAN	ARCHITECT/DESIGN	ARCH.FARAH	APPROVED Doc/Moe	ENG.AB MOMEN RAAD	DRAWING No	STRUCTURAL
		RCC/ DESIGN	M. Sc. ENG.M.RAHIM	SCALE	AS SHOWN (A3)	CODE NO S-0256	19/25
		TECH- APPROVED BY	M.Sc. ENG.AB.MATIN MAQOL	DATE	1393-4-5		

PROJECT NAME

DRAWING TITLE: 10 CLASS ROOM SCHOOL BURNT BRICK IRON SHEET ROOF With computer lab and labratory FRAME: (6-9)

E

F-7 (4Nrs)

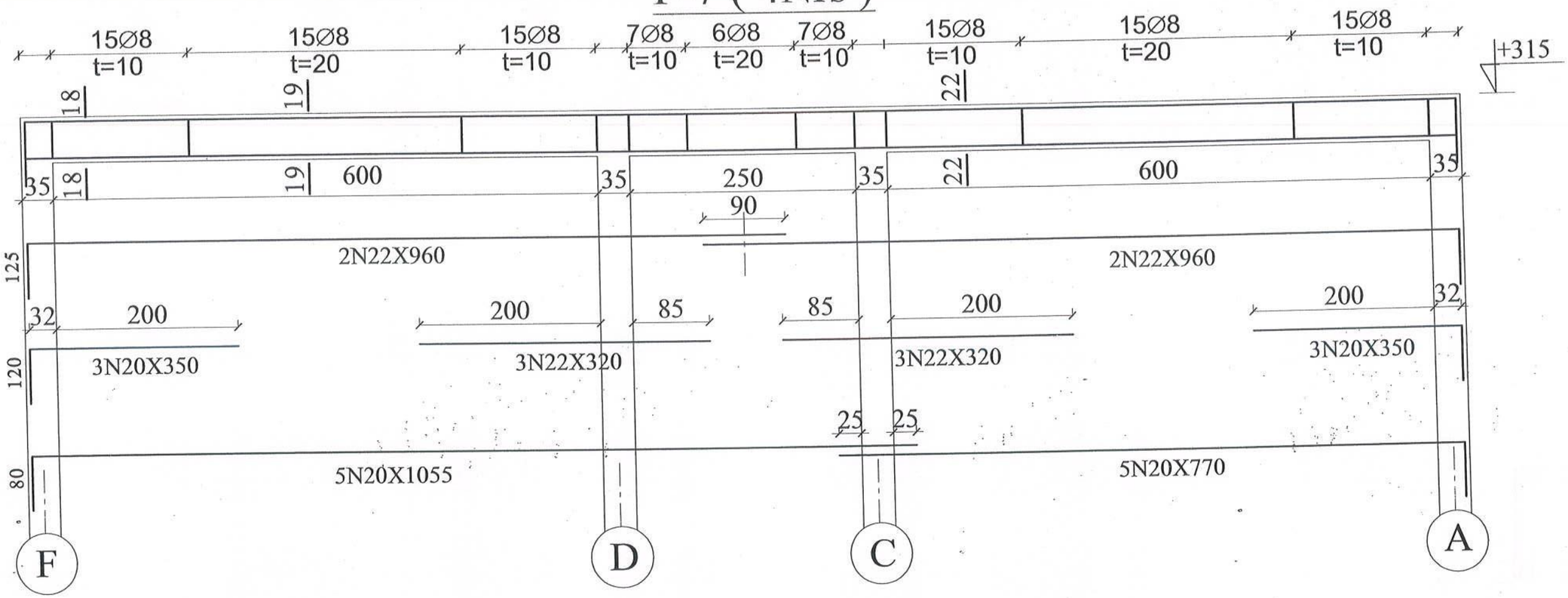

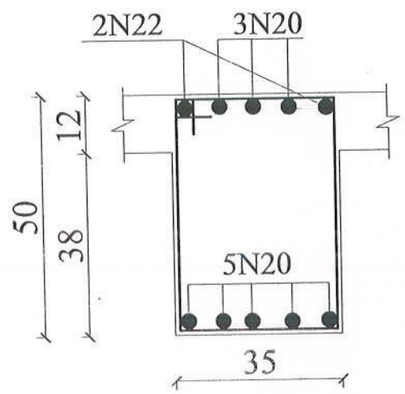

SEC:18-18

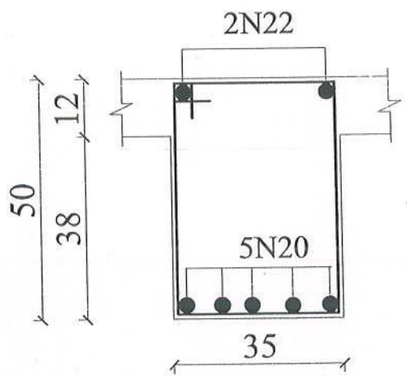

SEC:19-19

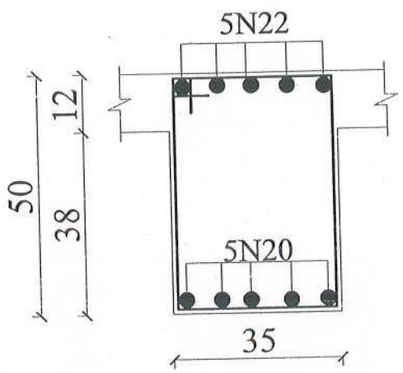

SEC:22-22

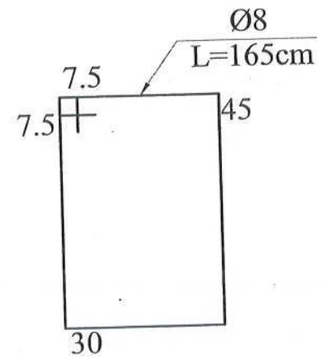

MINISTRY OF EDUCATION DEPARTMENT OF CONSTRUCTION	STANDARD SCHOOL DESIGN IN AFGHANISTAN	ARCHITECT/DESIGN	ARCH.FARAH	APPROVED: Doc/Moe	ENG.AB MOMEN RAAD	DRAWING No	STRUCTURAL
		RCC/ DESIGN	M. Sc. ENG.M.RAHIM	SCALE	AS SHOWN (A3)	CODE NO S-0256	20/25
		TECH- APPROVED BY	M.Sc. ENG.AB.MATIN MAQOL	DATE	1393-4-5		

PROJECT NAME: 10 CLASS ROOM SCHOOL BURNT BRICK IRON SHEET ROOF With computer lab and labratory FRAME : (1)

DRAWING TITLE

E

F-8 (2Nrs)

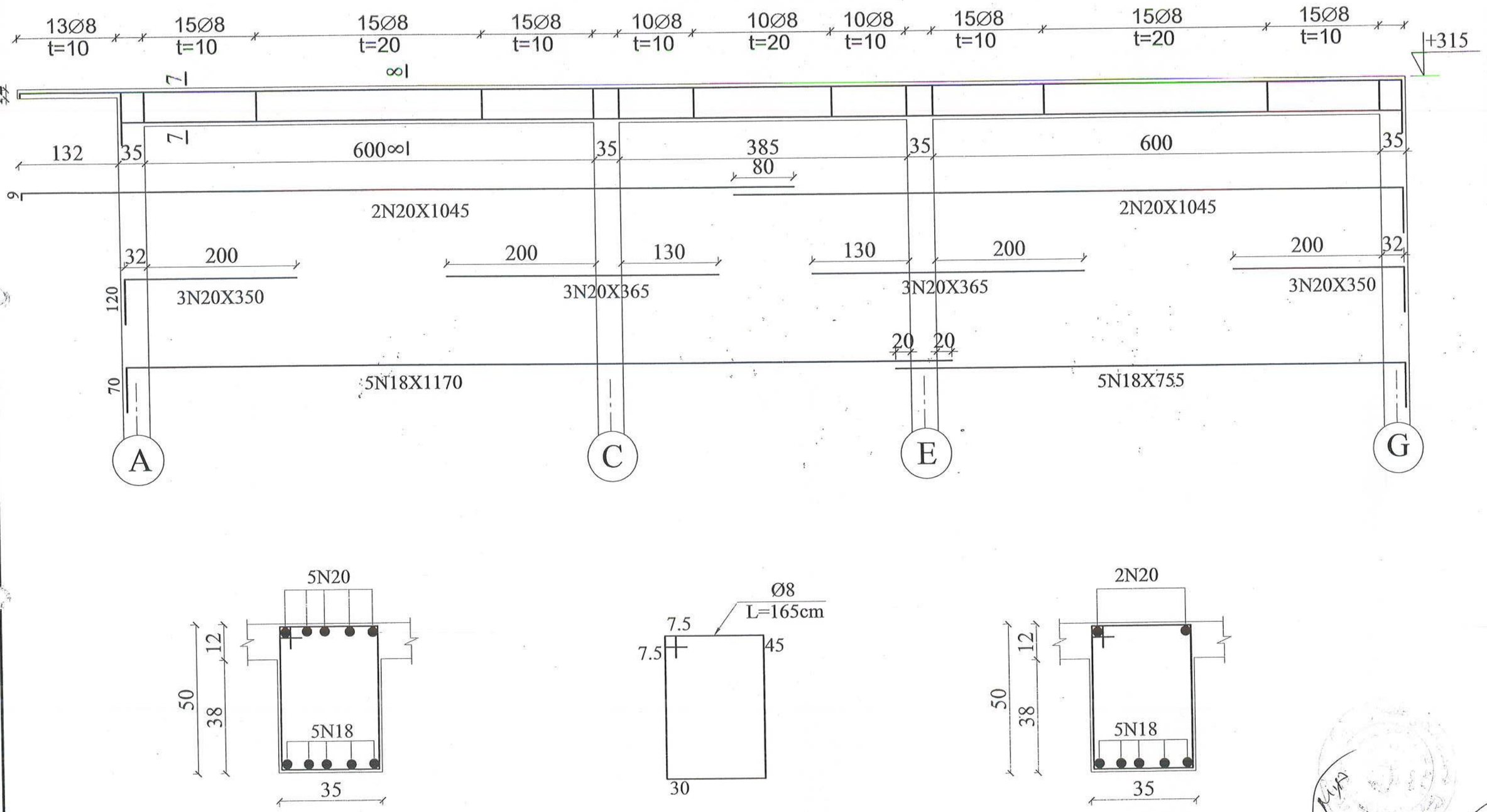

MINISTRY OF EDUCATION DEPARTMENT OF CONSTRUCTION	STANDARD SCHOOL DESIGN IN AFGHANISTAN	ARCHITECT/DESIGN	ARCH.FARAH	APPROVED:Doc/Moe	ENG:AB MOMEN RAAD	DRAWING No	STRUCTURAL	PROJECT NAME
		RCC/ DESIGN	M. Sc. ENG.M.RAHIM	SCALE	AS SHOWN (A3)	CODE NO S-0256	21 / 25	DRAWING TITLE
		TECH- APPROVED BY	M.Sc. ENG.AB.MATIN MAQOL	DATE	1393-4-5			

10 CLASS ROOM SCHOOL BURNT BRICK IRON SHEET ROOF
With computer lab and labratory
FRAME : (8)

E

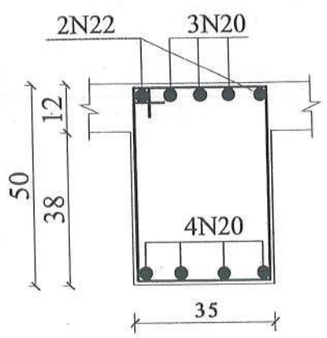

SEC:23-23

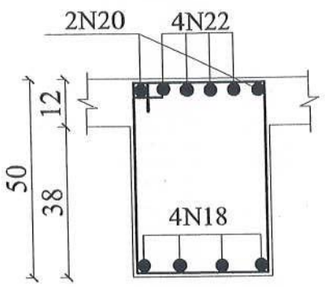

SEC:24-24

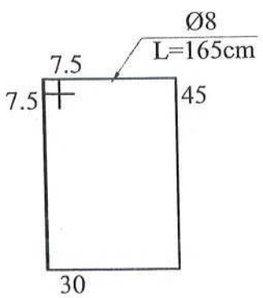

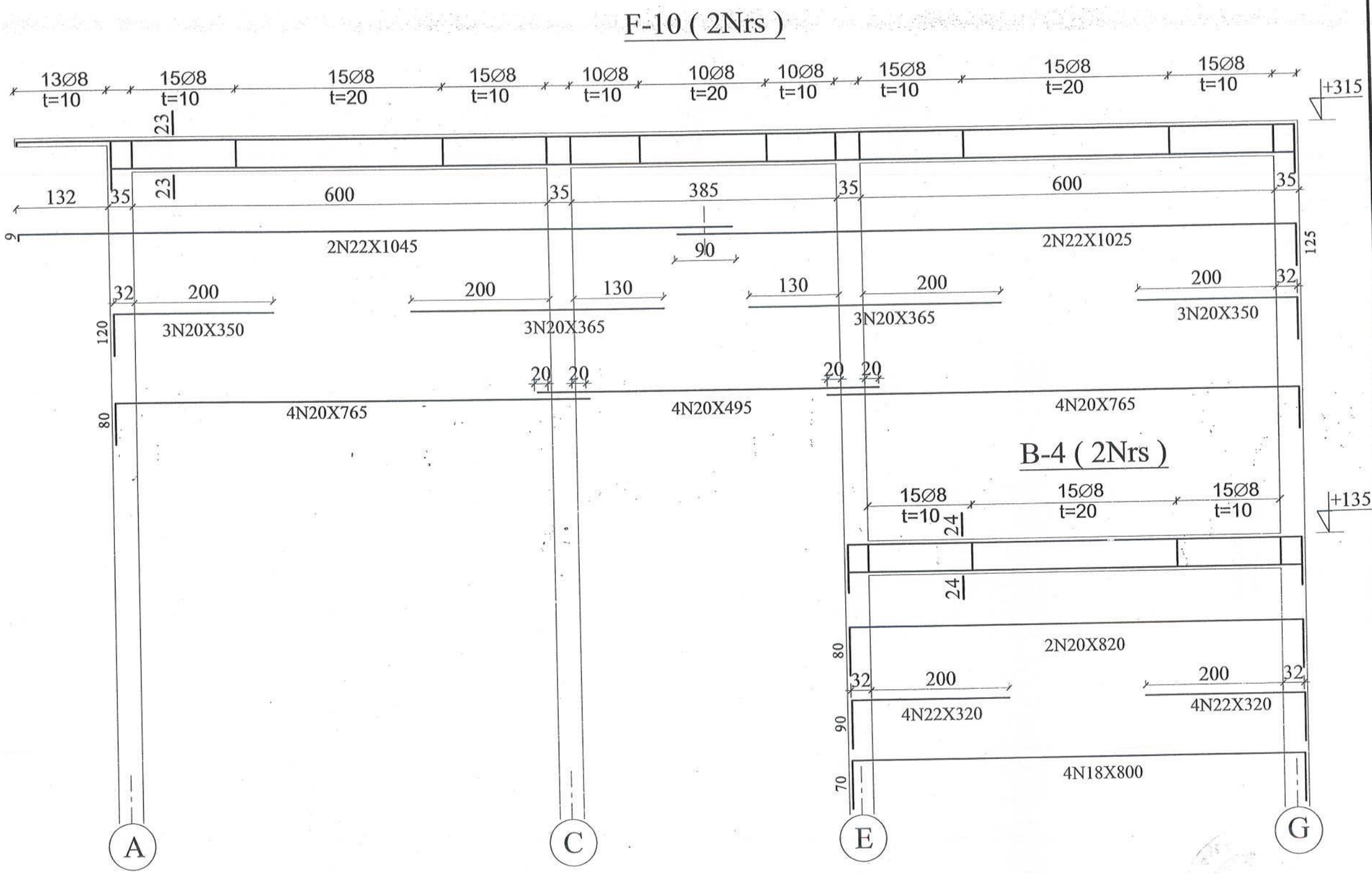

MINISTRY OF EDUCATION DEPARTMENT OF CONSTRUCTION	STANDARD SCHOOL DESIGN IN AFGHANISTAN	ARCHITECT/DESIGN	ARCH.FARAH	APPROVED.Doc/Moe	ENG.AB MOMEN RAAD	DRAWING No	STRUCTURAL	PROJECT NAME	
		RCC/ DESIGN	M. Sc. ENG.M.RAHIM	SCALE	AS SHOWN (A3)	CODE NO S-0256	22 / 25	DRAWING TITLE	10 CLASS ROOM SCHOOL BURNT BRICK IRON SHEET ROOF, With computer lab and labratory FRAME : (10)
		TECH- APPROVED BY	M.Sc. ENG.AB.MATIN MAQOL	DATE	1393-4-5				E

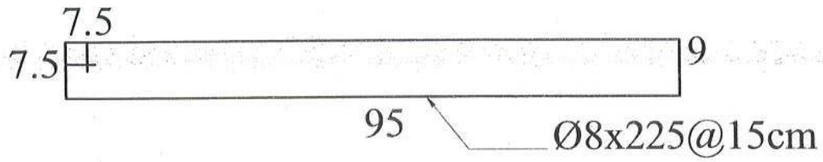

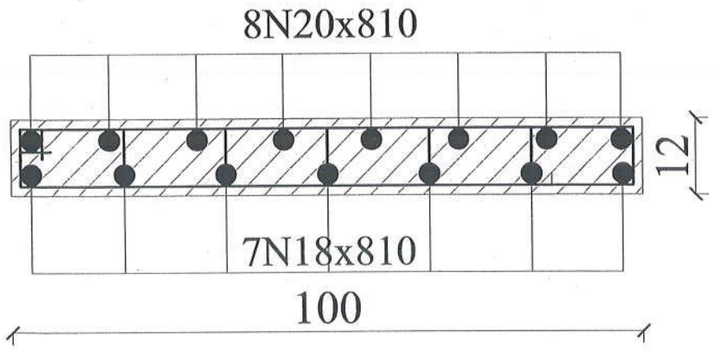

SEC: B-5(1Nrs)

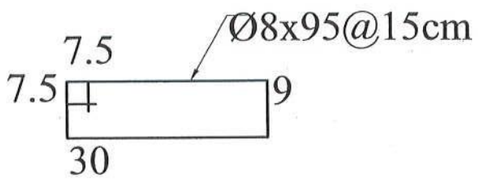

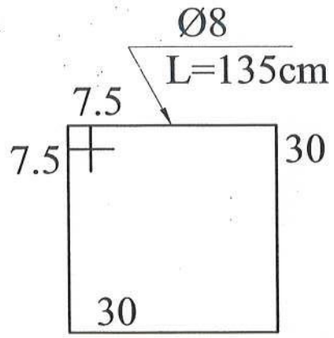

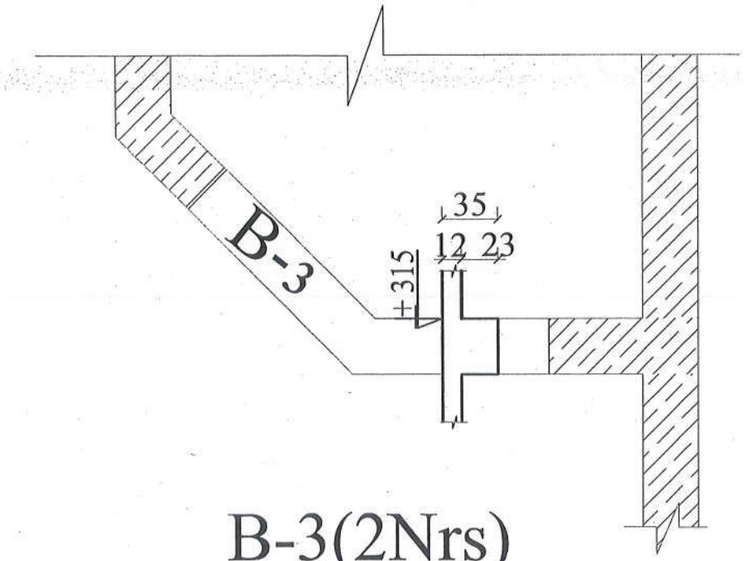

B-3(2Nrs)

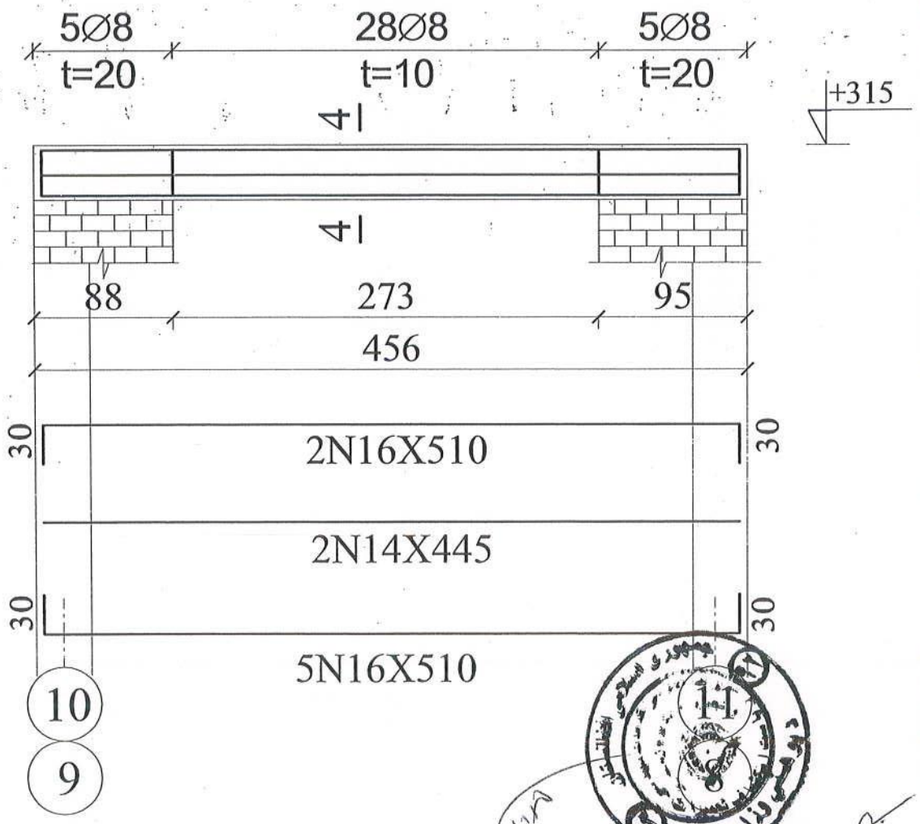

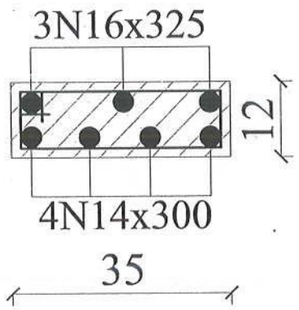

SEC: B-7(2Nrs)

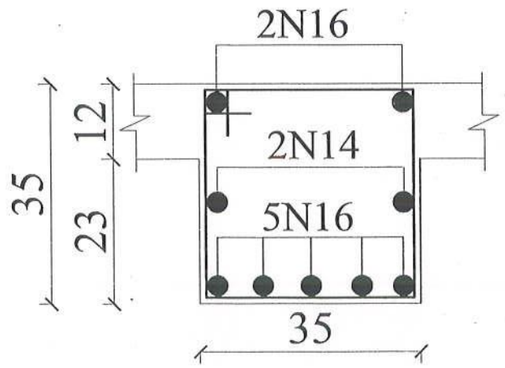

SEC: 4-4

MINISTRY OF EDUCATION DEPARTMENT OF CONSTRUCTION	STANDARD SCHOOL DESIGN IN AFGHANISTAN	ARCHITECT/DESIGN	ARCH.FARAH	APPROVED/Doc/Moe	ENG.AB MOMEN RAAD	DRAWING No	STRUCTURAL
		RCC/ DESIGN	M. Sc. ENG.M.RAHIM	SCALE	AS SHOWN (A3)	CODE NO S-0256	23/25
		TECH- APPROVED BY	M.Sc. ENG.AB.MATIN MAQOL	DATE	1393-4-5		

PROJECT NAME

DRAWING TITLE

10 CLASS ROOM SCHOOL BURNT BRICK IRON SHEET ROOF
With computer lab and labratory
BEAMS : (3-5-7)

E

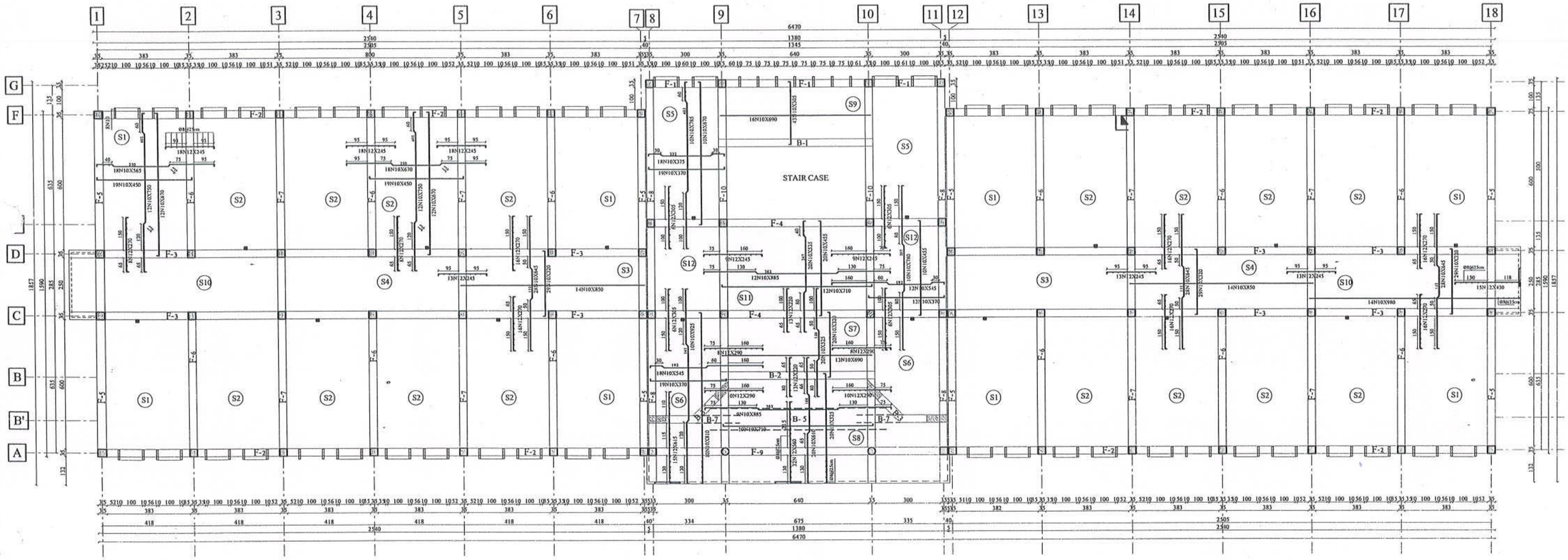

GROUND FLOOR SLAB BAR BENDING

MINISTRY OF EDUCATION DEPARTMENT OF CONSTRUCTION	STANDARD SCHOOL DESIGN IN AFGHANISTAN	ARCHITECT/DESIGN	ARCH.FARAH	APPROVED: Doc/Moe	ENG.AB MOMEN RAAD	DRAWING No	STRUCTURAL	PROJECT NAME
		RCC/ DESIGN	M. Sc. ENG.M.RAHIM	SCALE	AS SHOWN (A3)	CODE NO S-0256	24 / 25	DRAWING TITLE: 10 CLASS ROOM SCHOOL BURNT BRICK IRON SHEET ROOF. With computer lab and labratory GROUND FLOOR SLAB BAR BENDING
		TECH- APPROVED BY	M.Sc. ENG.AB.MATIN MAQOL	DATE	1393-4-5			E

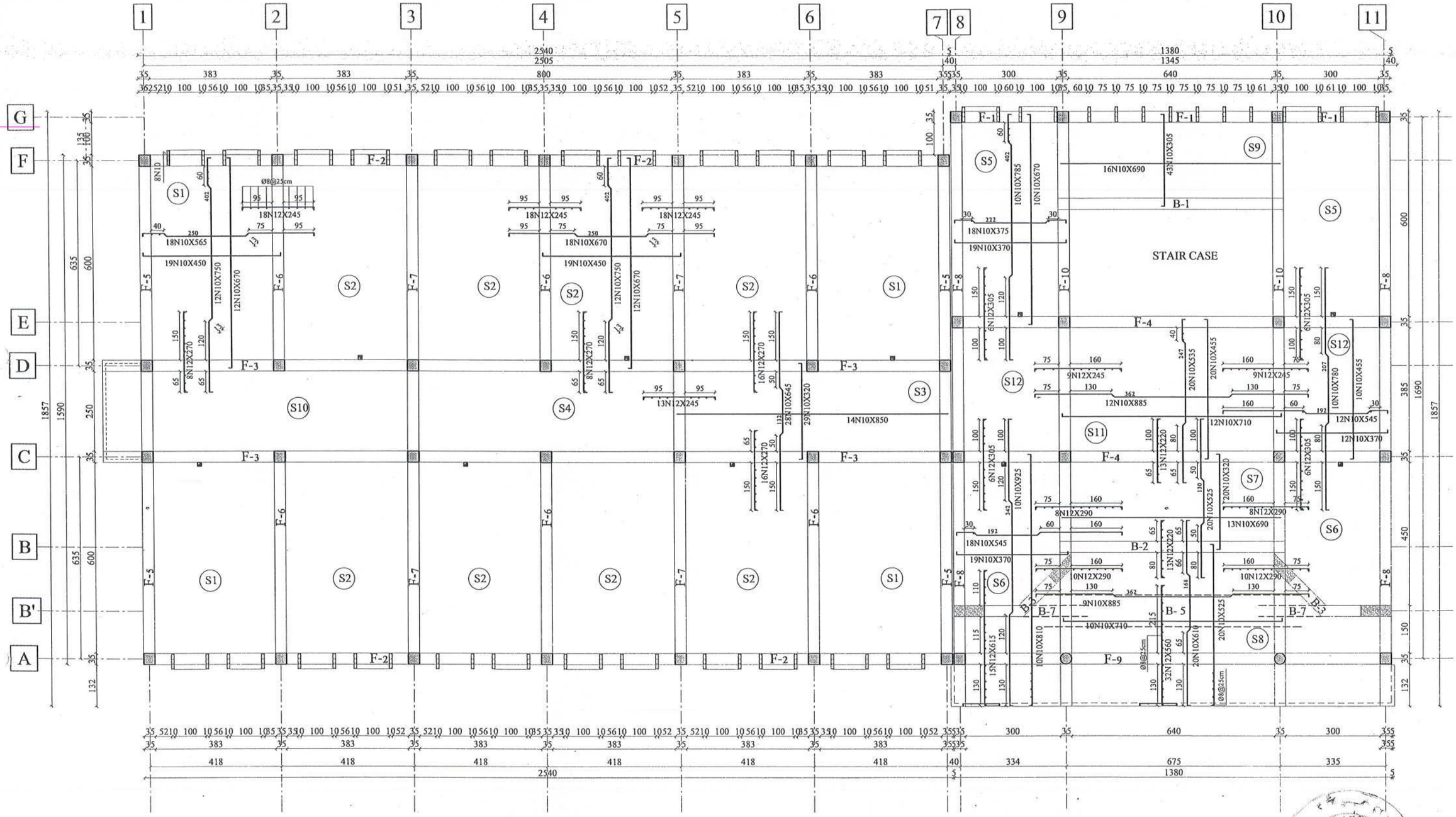

GROUND FLOOR SLAB BAR BENDING

MINISTRY OF EDUCATION DEPARTMENT OF CONSTRUCTION	STANDARD SCHOOL DESIGN IN AFGHANISTAN	ARCHITECT/DESIGN	ARCH.FARAH	APPROVED: Doc/Moe	ENG.AB MOMEN RAAD	DRAWINGTYPE	STRUCTURAL
		RCC/ DESIGN	M. Sc. ENG.M.RAHIM	SCALE	AS SHOWN (A3)	CODE NO S-0256	25/25
		TECH- APPROVED BY	M.Sc. ENG.AB.MATIN MAQOL	DATE	1393-4-25		

PROJECT NAME: 10 CLASS ROOM SCHOOL BURNT BRICK IRON SHEET ROOF. With computer lab and labratory

DRAWING TITLE: GROUND FLOOR SLAB BAR BENDING

E

WATER SUPPLY OF 10 CLASS ROOM BURUNT BRICK IRON SHEAT WITH COPUTER CLASS AND LABORATORY TYPE 2

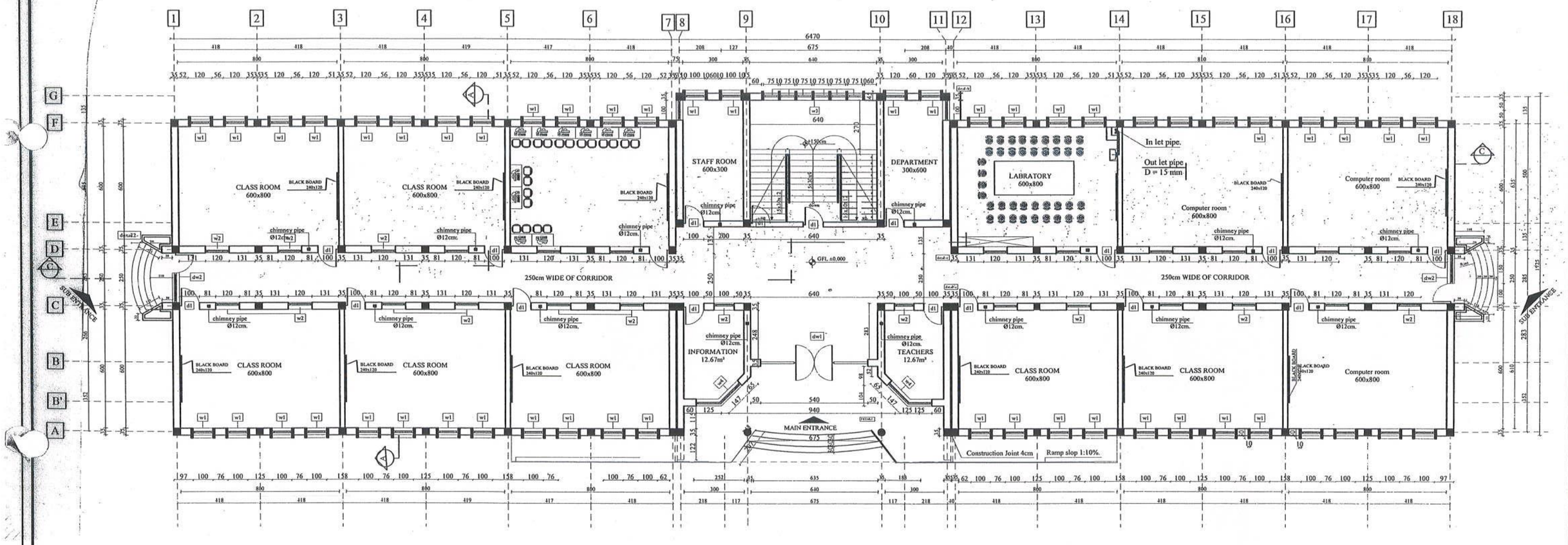

water supply plan

MINISTRY OF EDUCATION DEPARTMENT OF CONSTRUCTION	STANDARD SCHOOL DESIGN IN AFGHANISTAN	WATER SUPPLY / DESIGN	ENG- HUMA SADAT	APPROVED: Doc/Moe	ENG.AB.MOMIN RAAD	DRAWING TYPE	WATER SUPPLY
		CHECKED BY	ENG - M. RAHIM	SCALE	AS SHOWN IN A3	CODE NO 3-0256	1/4
		TECH- APPROVED BY	ENG.AB.MATIN MAQOL	Date	12 / 6 / 2014		

PROJECT NAME

PROJECT TYPE&DRAWING TITLE: *10 CLASS ROOM SCHOOL WITH COMPUTER CLASS AND LABORATORY BURNT BRICK IRON SHEET ROOF.*

Plan of Water Supply.

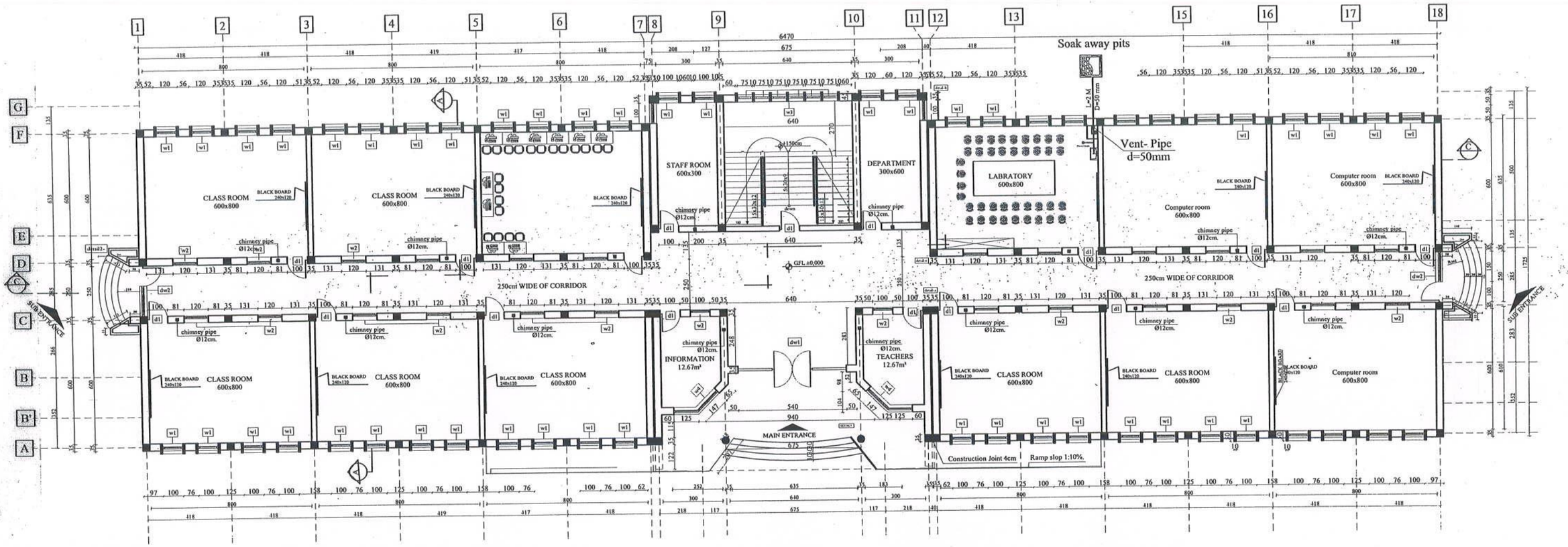

canalization plan.

MINISTRY OF EDUCATION DEPARTMENT OF CONSTRUCTION	STANDARD SCHOOL DESIGN IN AFGHANISTAN	WATER SUPPLY / DESIGN	ENG- HUMA SADAT	APPROVED.Doc/Moc	ENG.AB.MOMIN RAAD	DRAWING TYPE	WATER SUPPLY
		CHECKED BY	ENG - M. RAHIM	SCALE	AS SHOWN IN A3	CODE NO 5.0256	2/4
		TECH- APPROVED BY	ENG.AB.MATIN MAQOL	Date	12 / 6 / 2014		

PROJECT NAME

PROJECT TYPE&DRAWING TITLE

10 CLASS ROOM SCHOOL WITH COMPUTER CLASS AND LABORATORY BURNT BRICK IRON SHEET ROOF.

Plan of Canalization.

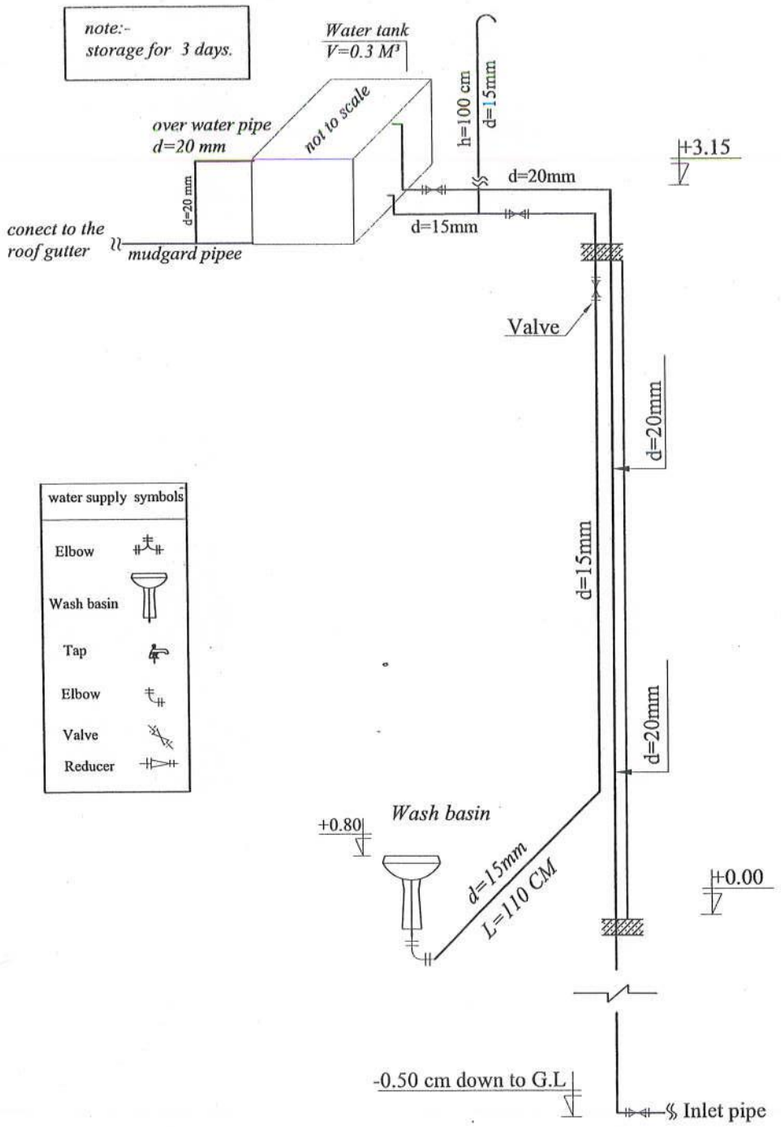

WATER SUPPLY DIAGRAM
SCALE 1-100

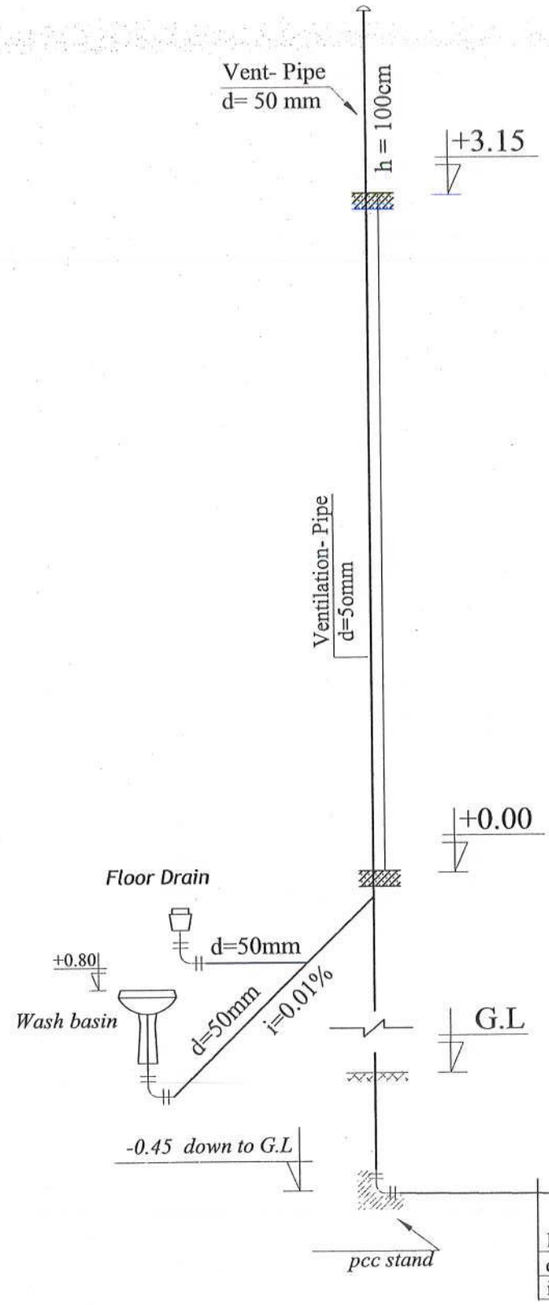

CANALIZATION DIAGRAM
SCALE 1-100

MINISTRY OF EDUCATION DEPARTMENT OF CONSTRUCTION	STANDARD SCHOOL DESIGN IN AFGHANISTAN	WATER SUPPLY / DESIGN	ENG- HUMA SADAT	APPROVED Doc/Moe	ENG.AB.MOMIN RAAD	DRAWING TYPE	WATER SUPPLY
		CHECKED BY	ENG - M . RAHIM	SCALE	AS SHOWN IN A3	CODE NO S.0286	3/4
		TECH- APPROVED BY	ENG.AB.MATIN MAQOL	Date	12 / 6 / 2014		

PROJECT NAME

PROJECT TYPE&DRAWING TITLE

10 CLASS ROOM SCHOOL WITH COMPUTER CLASS AND LABORATORY BURNT BRICK IRON SHEET ROOF
Diagram of water supply and canalization.

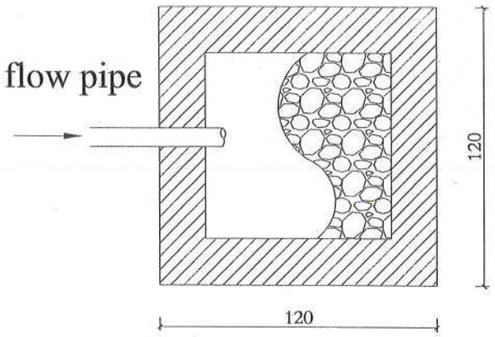

Soak away pits plan

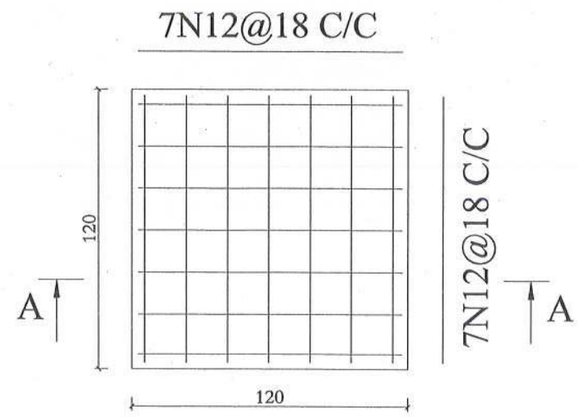

Renforcement Slab

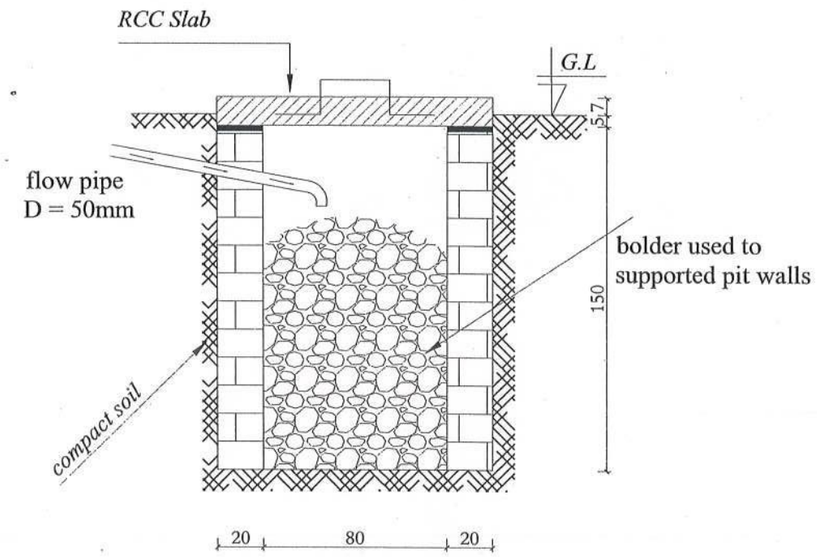

Soak away pits detaile

Ditail .B

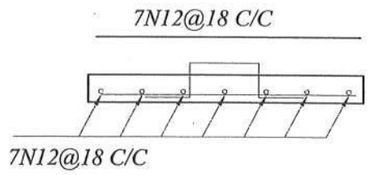

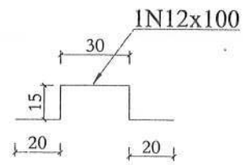

MINISTRY OF EDUCATION DEPARTMENT OF CONSTRUCTION	STANDARD SCHOOL DESIGN IN AFGHANISTAN	WATER SUPPLY / DESIGN	ENG- HUMA SADAT	APPROVED:Doc/Moc	ENG.AB.MOMIN RAAD	DRAWING TYPE	WATER SUPPLY	PROJECT NAME
		CHECKED BY	ENG - M. RAHIM	SCALE	AS SHOWN IN A3	CODE NO 3.0256	4 / 4	PROJECT TYPE&DRAWING TITLE
		TECH- APPROVED BY	ENG.AB.MATIN MAQOL	Date	12 / 6 / 2014			10 CLASS ROOM SCHOOL WITH COMPUTER CLASS AND LABORATORY BURNT BRICK IRON SHEET ROOF soak away pit detaile

PRODUCED BY AN AUTODESK EDUCATIONAL PRODUCT

SPECIFICATION OF ELECTRICAL EQUIPMENT FOR TWO FLOOR

NO.	DESCRIPTION	SIGNS	UNIT	PIECES	REMARKS
1	FLUORESCENT LIGHT FIXTURE2x36W,50Hz,220V		NO	48	
2	CEILING MOUNTED FLUORESCENT 1x24W		NO	2	
3	FLUORESCENT LIGHT FIXTURE1x40W,50Hz,220V		NO	26	
4	TWO POLE SWITCH UNDER PLASTER 10 AMP, 1PH		NO	16	
5	TWO WAY SWITCHES		NO	10	
6	SOCKET OUTLET - SINGLE PHASE		NO	56	
7	PANEL BOARD WITH2X16AMP CB+RCBO AND 12X20AMP CB+RCBO		NO	1	All CB16&20Amp+RCBO.
8	WIRE 1X2.5 mm for lighting.		M	1200	
9	WIRE 1X4mm² for sockets.		M	1000	
10	WIRE 1(3x16)mm² from mine panel to distribution panel.		M	3	
11	PVC CONDUIT 2 INCH		M	3	
12	Cable1x25 mm² FOR GROUNDING		M	12	
13	CABLE 1x35mm² FOR GROUNDING		M	15	
14	PVC CONDUIT 1 INCH		M	740	
15	PVC JOINT BOX		NO	45	
16	GROUNDING ROD 3M LENGTH, Ø20MM		NO	4	
17	MAIN DISTRIBUTION PANEL COMPLETE WITH 1X100 AMP MINE CB AND 2X60AMP CB.		M	1	it is for two floor in future we can use one 60A CB for next floor.
18	CABLE 1(2x35mm²) FOR MINE LINE		M	60	
29	PVC CONDUIT3 INCH		M	60	
20	CHANGE OVER GOOD QUALITY ONE PHASE 30AMP		NO	1	FOR LIGHTS
21	CHANGE OVER GOOD QUALITY THREE PHASE 30AMP		NO	1	FOR SOCKETS.

RCBO(Residual Circuit Breaker Over Current

MINISTRY OF EDUCATION DEPARTMENT OF CONSTRUCTION	STANDARD SCHOOL DESIGN IN AFGHANISTAN	ELECTRICAL /DESIGN	ENG-FEROZ SADID	APPROVED/Doc/Moe	ENG.AB.MOMEN RAD	DRAWING TYPE	ELECTRICAL	PROJECT NAME	10CLASS ROOM WITH COMPUTER CLASS AND LAPRATORY.
		CHEEKED BY	ENG-M RAHIM	SCALE	AS SHOWN (A3)	SHEET No 5025	01 / 08	DRAWING TITLE	LEGEND
		TECH- APPROVED BY	ENG.AB.MATIN MAQOL	DATE	-09JON-2013				

PRODUCED BY AN AUTODESK EDUCATIONAL PRODUCT

PRODUCED BY AN AUTODESK EDUCATIONAL PRODUCT

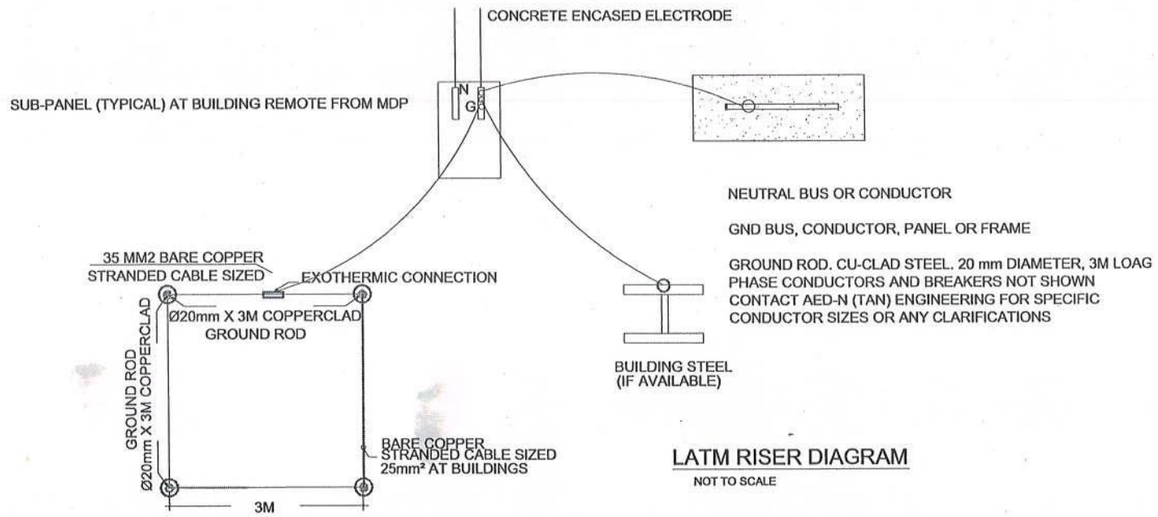

LATM RISER DIAGRAM

NOT TO SCALE

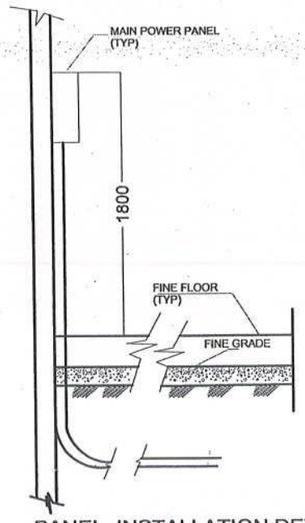

PANEL INSTALLATION DETAIL

NOT TO SCALE

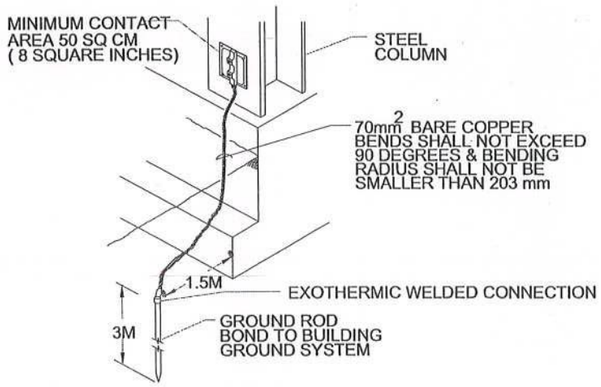

COLUMN GROUNDING DETAIL

NOT TO SCALE

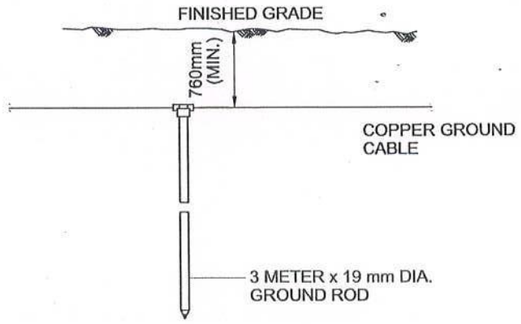

NOTES:

1. CONDUCTOR SIZE SHALL BE AS INDICATED ON PLANS.
2. EXOTHERMIC WELDS SHALL BE AS RECOMMENDED BY MANUFACTURER FOR THE SIZE OF CONNECTION AND MATERIAL INVOLVED.SEE DETAIL 5 ON SHEET SE-7.

BELOW GRADE GROUNDING ROD DETAIL

NOT TO SCALE

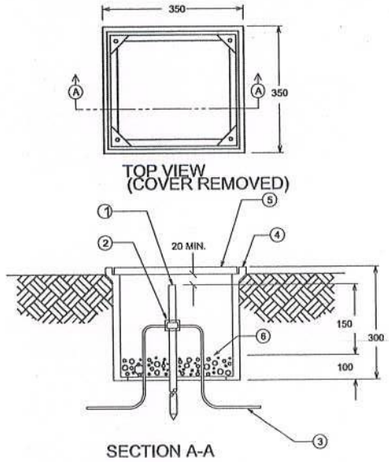

MATERIAL LIST

1. GROUND ROD
2. EXOTHERMIC WELD
3. GROUNDING CONDUCTOR 70mm² COPPER
4. POLYMER CONCRETE FIBERGLASS REINFORCED BOX
5. COVER FOR ABOVE BOX
6. GRAVEL OR CRUSHED STONE

GROUND ROD ACCESS
BOX INSTALLATION DETAIL

NOT TO SCALE

	MINISTRY OF EDUCATION DEPARTMENT OF CONSTRUCTION		STANDARD SCHOOL DESIGN IN AFGHANISTAN	ELECTRICAL /DESIGN	ENG-FEROZ SADID	APPROVED: Doc/Moe	ENG.AB MOMEN RAD	DRAWING TYPE	ELECTRICAL	PROJECT NAME	10CLASS ROOM WITH COMPUTER CLASS AND LAPRATORY.
				CHEEKED BY	ENG-M RAHIM	SCALE	AS SHOWN (A3)	SHEET No	02 08	DRAWING TITLE	GROUNDING
				TECH- APPROVED BY	ENG.AB.MATIN MAQOL	DATE	-09JON-2013	50256			

PRODUCED BY AN AUTODESK EDUCATIONAL PRODUCT

PRODUCED BY AN AUTODESK EDUCATIONAL PRODUCT

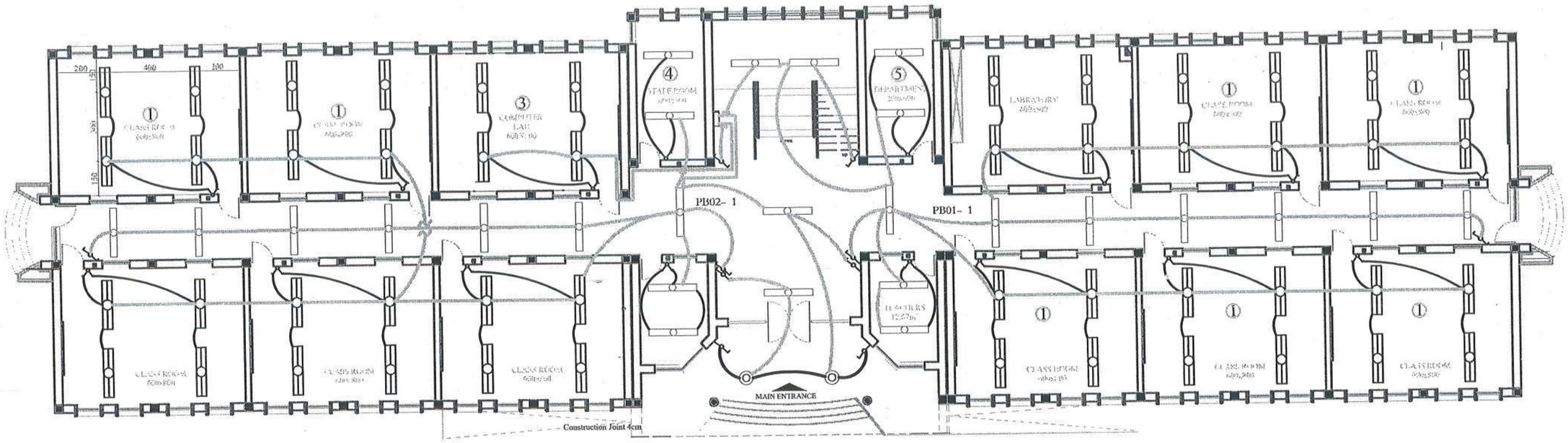

PRODUCED BY AN AUTODESK EDUCATIONAL PRODUCT

MINISTRY OF EDUCATION DEPARTMENT OF CONSTRUCTION	STANDARD SCHOOL DESIGN IN AFGHANISTAN	ELECTRICAL /DESIGN	ENG-FEROZ SADID	APPROVED, Doc/Moe	ENG.AB MOMEN RAD	DRAWING TYPE	ELECTRICAL	PROJECT NAME	10CLASS ROOM WITH COMPUTER CLASS AND LAPRATORY
		CHEEKED BY	ENG-M RAHIM	SCALE	AS SHOWN (A3)	SHEET No	03 / 08	DRAWING TITLE	LIGHTING PLAN
		TECH- APPROVED BY	ENG.AB.MATIN MAQOL	DATE	-09JON-2013				

PRODUCED BY AN AUTODESK EDUCATIONAL PRODUCT

PRODUCED BY AN AUTODESK EDUCATIONAL PRODUCT

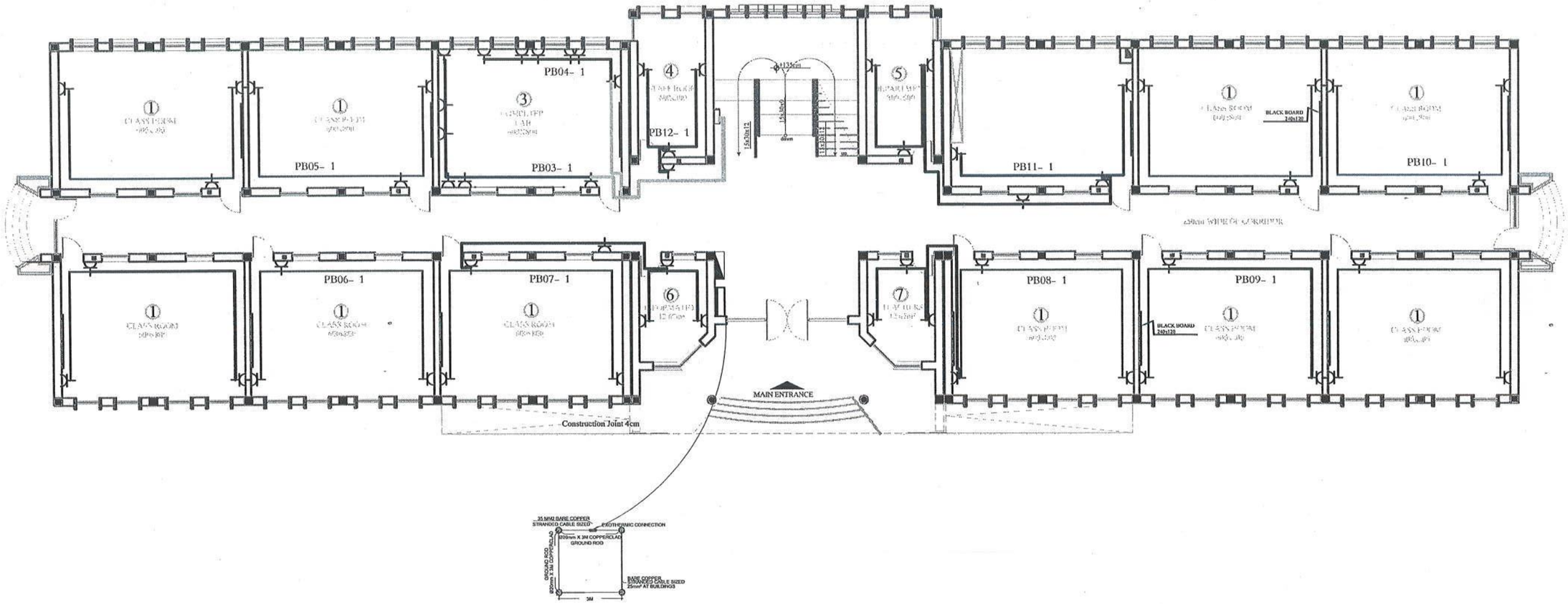

	MINISTRY OF EDUCATION DEPARTMENT OF CONSTRUCTION		STANDARD SCHOOL DESIGN IN AFGHANISTAN	ELECTRICAL /DESIGN	ENG-FEROZ SADID	APPROVED: Doc/Moe	ENG.AB MOMEN RAD	DRAWING TYPE	ELECTRICAL	PROJECT NAME	10CLASS ROOM WITH COMPUTER CLASS AND LAPRATORY
				CHEEKED BY	ENG-M RAHIM	SCALE	AS SHOWN (A1)	SHEET No	04 / 08	DRAWING TITLE	POWER PLAN
				TECH- APPROVED BY	ENG.AB.MATIN MAQOL	DATE	-09JON-2013	50256			

PRODUCED BY AN AUTODESK EDUCATIONAL PRODUCT

PRODUCED BY AN AUTODESK EDUCATIONAL PRODUCT

PANEL SCHEDULE AND SINGLE LINE DIAGRAM

PANEL BOARD NAME : PB1 65 AMP BUS BAR RATE MAIN BREAKER :70 A
PANEL LOCATION: GROUND FLOOR PANEL 220 VOLT , 1 PHASE , 3 WIRE , 50HZ 30KA ISO / 0.5 SEC RECESSED MOUNTED NEMA ENCLOSURE

WIRE ,CONDUIT AND DESCRIPTION			SINGLE PHASE			TRIP & CIRCUIT				SINGLE PHASE			WIRE ,CONDUIT AND DESCRIPTION		
WIRE AND CONDUIT	GND WIRE	DESCRIPTION	A (VA)	A (VA)	A (VA)	AMP	CKT	CKT	AMP	A (VA)	A (VA)	A (VA)	DESCRIPTION	GND WIRE	WIRE AND CONDUIT
2(1X2.5mm²)Ø20mm	2.5mm²	LIGHTING	1378.400			16	1	2	16	1349.0			LIGHTING	2.5mm²	2(1X2.5mm²)Ø20mm
2(1X2.5mm²)Ø20mm	2.5mm²	RECEPTACLE		1440.000		20	3	4	20		1440.0		RECEPTACLE	4mm²	2(1X4mm²)Ø20mm
2(1X4mm²)Ø20mm	4mm²	RECEPTACLE			864.0	20	5	6	20			864.0	RECEPTACLE	4mm²	2(1X4mm²)Ø20mm
2(1X4mm²)Ø20mm	4mm²	RECEPTACLE	1008.0			20	7	8	20	864.0			RECEPTACLE	4mm²	2(1X4mm²)Ø20mm
2(1X4mm²)Ø20mm	4mm²	RECEPTACLE		864.000		20	9	10	20		864.0		RECEPTACLE	4mm²	2(1X4mm²)Ø20mm
2(1X4mm²)Ø20mm	4mm²	RECEPTACLE			1008.0	20	11	12	20			576.0	RECEPTACLE	4mm²	2(1X4mm²)Ø20mm
		SPARE	0.0			20	13	14	20	0.0			SPARE		
		SPARE				20	15	16	20				SPARE		
SUB - TOTAL IN (VA)			2386.4	2304.000	1872.000	-	-	-	-	2213.000	2304.000	1440.000	SUB - TOTAL IN (VA)		

TOTAL PHASE (A) =	4599.4	20.9
TOTAL PHASE (A) =	4608.0	20.9
TOTAL PHASE (A) =	3312.0	15.1
TOTAL CONNECTED LOAD	12519.4	19.0
DEMAND FACTOR	0.7	
DEMAND LOAD	8763.6	
25% FUTURE LOAD	2190.9	
TOTAL LOAD	10954.5	
TOTAL AMPERE	49.8	
BREAKER SIZE	62.2	

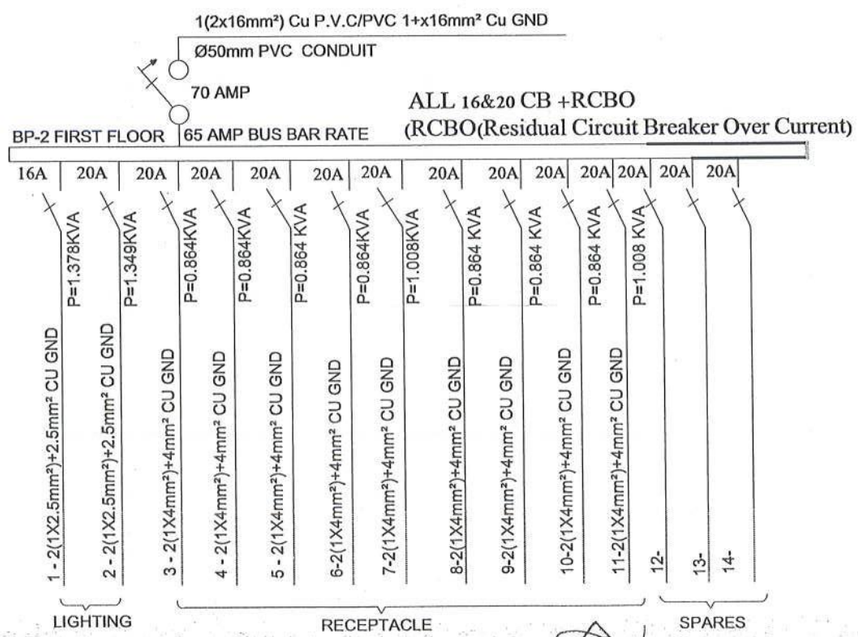

MINISTRY OF EDUCATION DEPARTMENT OF CONSTRUCTION	STANDARD SCHOOL DESIGN IN AFGHANISTAN	ELECTRICAL /DESIGN	ENG-FEROZ SADID	APPROVED/Doc/Moe	ENG.AB MOMEN RAD	DRAWING TYPE	ELECTRICAL
		CHEEKED BY	ENG-M RAHIM	SCALE	AS SHOWN (A3)	SHEET No	05 / 08
		TECH- APPROVED BY	ENG.AB.MATIN MAQOL	DATE	-09JON-2013		

PROJECT NAME	10CLASS ROOM WITH COMPUTER CLASS AND LAPRATORY.
DRAWING TITLE	PANEL SCHEDULE AND SINGLE LINE DIAGRAM.

PRODUCED BY AN AUTODESK EDUCATIONAL PRODUCT

PRODUCED BY AN AUTODESK EDUCATIONAL PRODUCT

INSTALL IN SIDE OF TWO ONE PHASE CHANG OVER ONE THREE PHASE CHANG OVER.

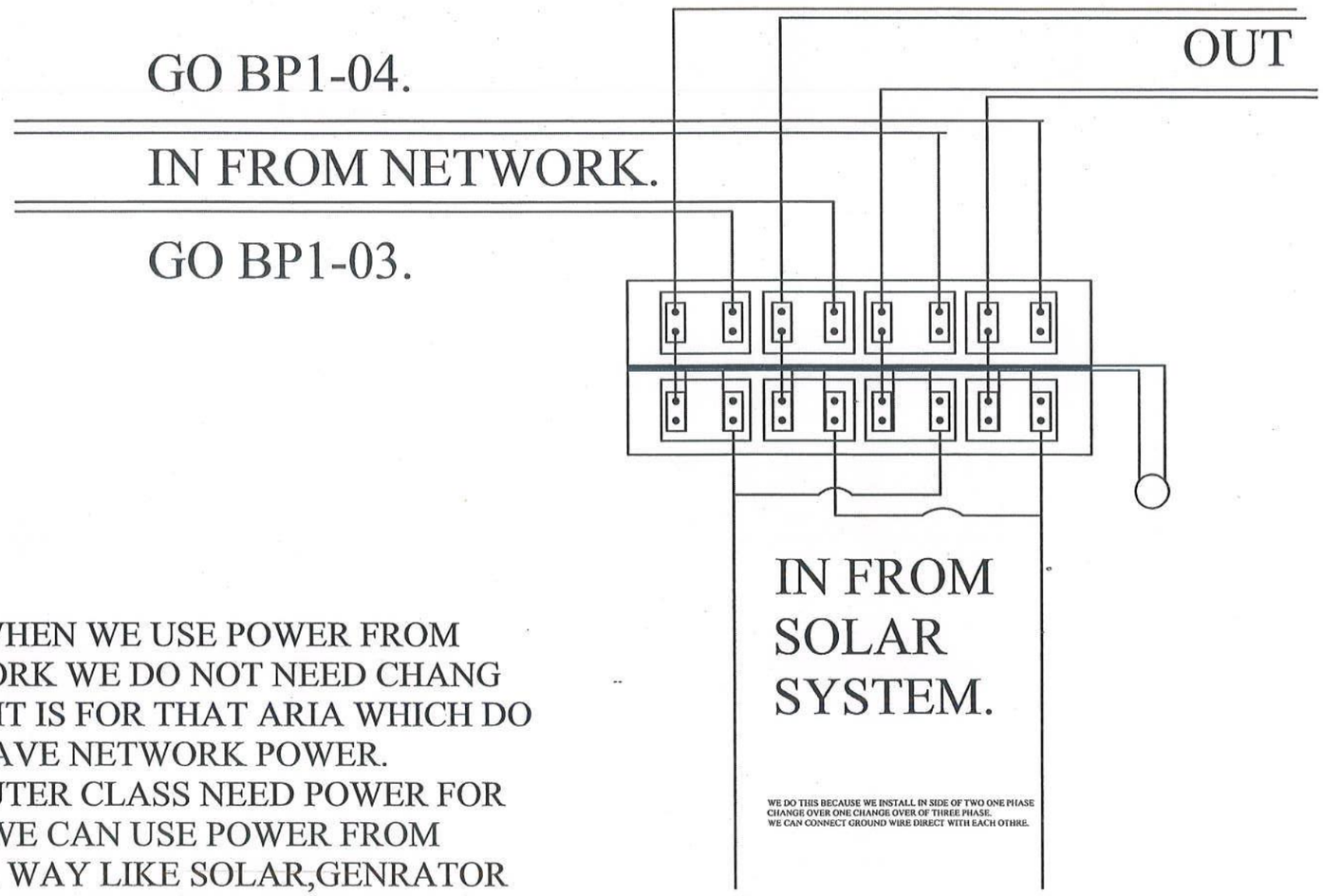

NOT: WHEN WE USE POWER FROM NETWORK WE DO NOT NEED CHANG OVER. IT IS FOR THAT ARIA WHICH DO NOT HAVE NETWORK POWER. COMPUTER CLASS NEED POWER FOR THAT WE CAN USE POWER FROM OTHER WAY LIKE SOLAR,GENRATOR OR, OTHER WAY. FOR PREVENT FROM LOSING OF POWER WE DO LIMIT OUR ARIA.0UR ARIA ARE COMPUTER CLASS LIGHTING AND PRECIPITATION.

	MINISTRY OF EDUCATION DEPARTMENT OF CONSTRUCTION		STANDARD SCHOOL DESIGN IN AFGHANISTAN	ELECTRICAL /DESIGN	ENG-FEROZ SADID	APPROVED, Doc/Moe	ENG.AB MOMEN RAD	DRAWING TYPE	ELECTRICAL	PROJECT NAME	10CLASS ROOM WITH COMPUTER CLASS AND LAPRATORY
				CHEEKED BY	ENG-M RAHIM	SCALE	AS SHOWN (A3)	SHEET No	06 / 08	DRAWING TITLE	CHANG OVER DETAIL
				TECH- APPROVED BY	ENG.AB.MATIN MAQOL	DATE	-09JON-2013				

PRODUCED BY AN AUTODESK EDUCATIONAL PRODUCT

PRODUCED BY AN AUTODESK EDUCATIONAL PRODUCT

Penal Board(PB1)

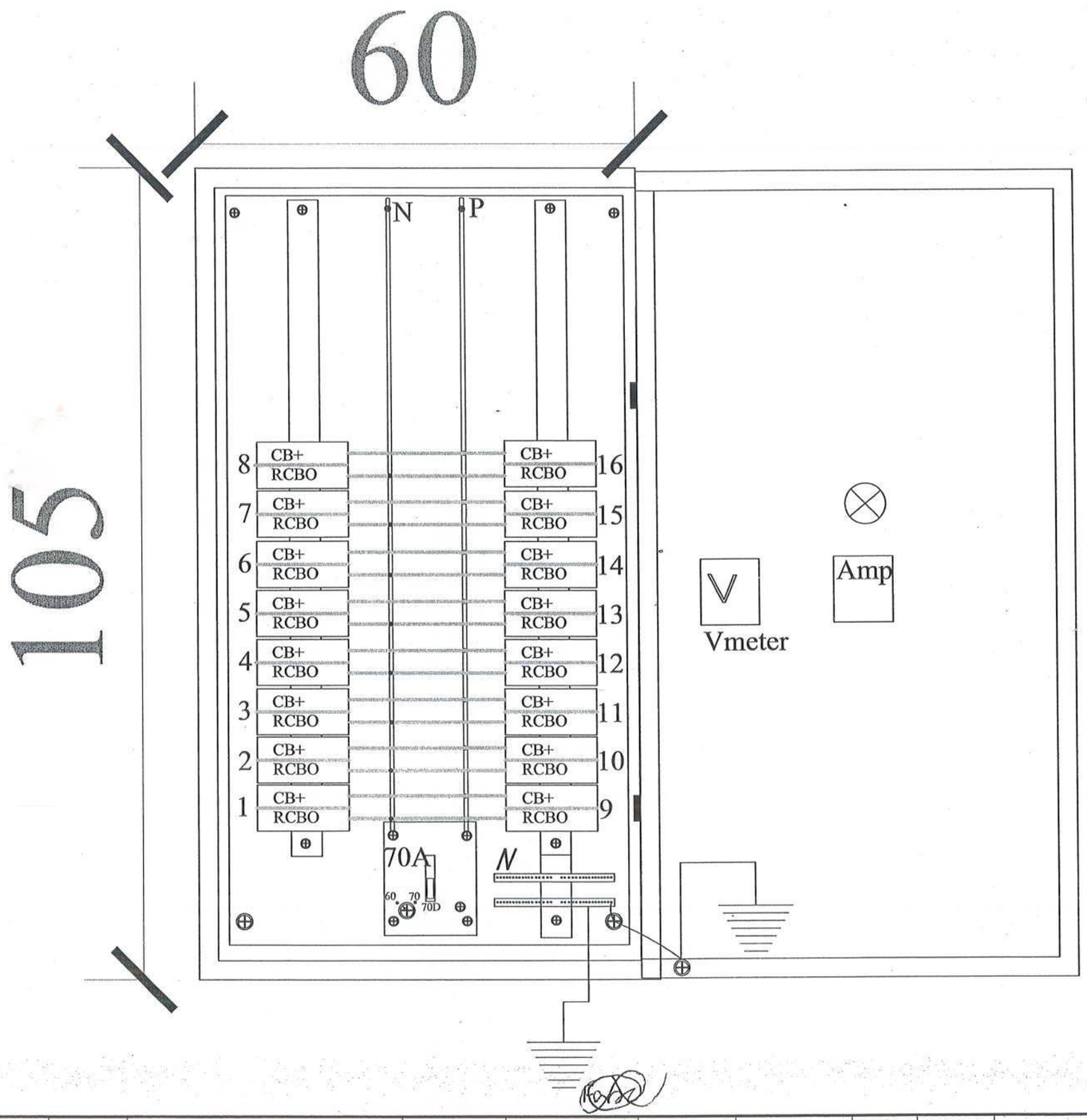

	MINISTRY OF EDUCATION DEPARTMENT OF CONSTRUCTION		STANDARD SCHOOL DESIGN IN AFGHANISTAN	ELECTRICAL /DESIGN	ENG-FEROZ SADID	APPROVED/Doc/Moe	ENG.AB MOMEN RAD	DRAWING TYPE	ELECTRICAL	PROJECT NAME	10CLASS ROOM WITH COMPUTER CLASS AND LAPRATORY
				CHEEKED BY	ENG-M RAHIM	SCALE	AS SHOWN (A3)	SHEET No	07 / 08	DRAWING TITLE	Penal board elevation.
				TECH- APPROVED BY	ENG.AB.MATIN MAQOL	DATE	-09JON-2013	50296			

PRODUCED BY AN AUTODESK EDUCATIONAL PRODUCT

PRODUCED BY AN AUTODESK EDUCATIONAL PRODUCT

Mine Destitution Penal Board(MDP)

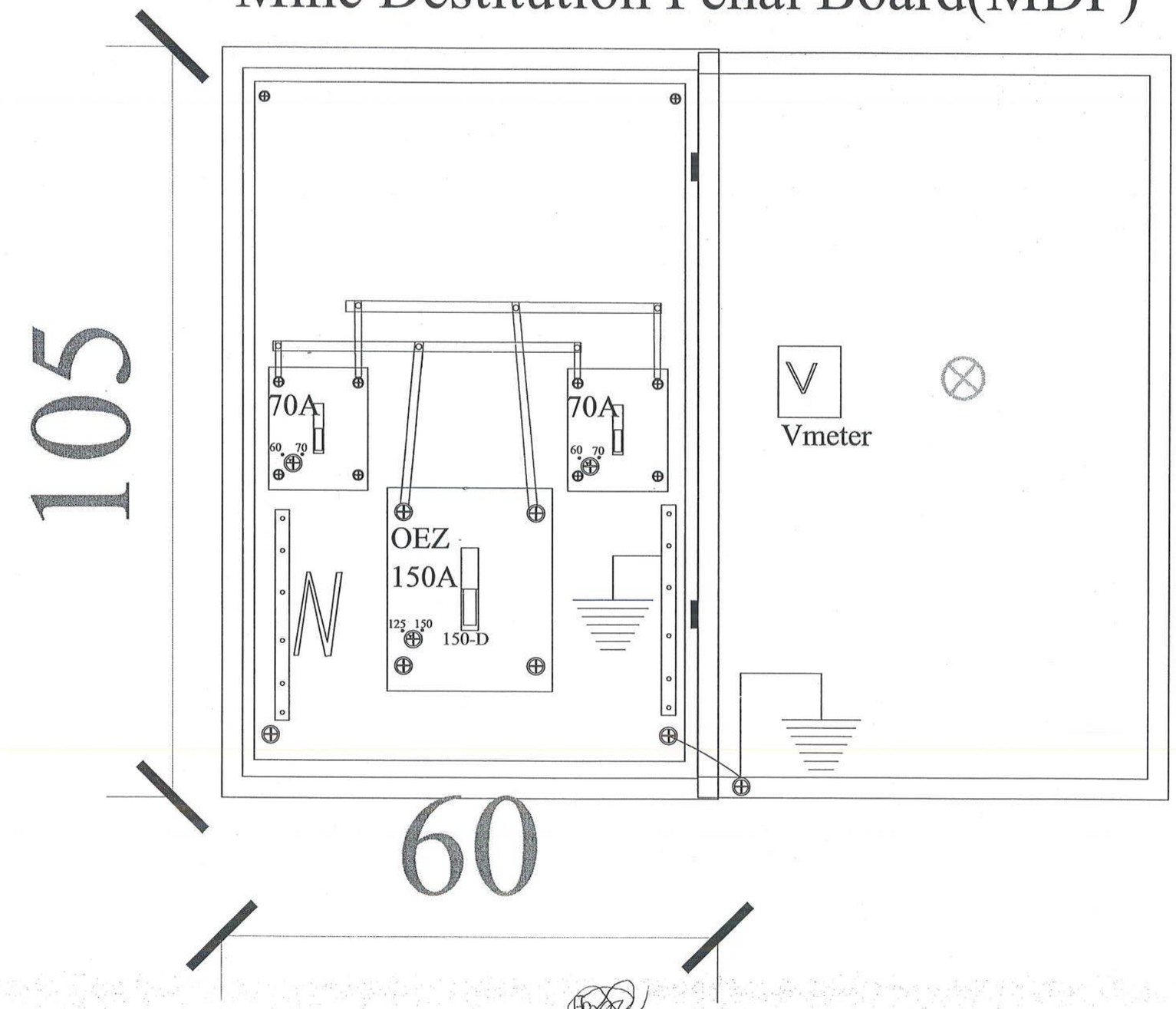

MINISTRY OF EDUCATION DEPARTMENT OF CONSTRUCTION	STANDARD SCHOOL DESIGN IN AFGHANISTAN	ELECTRICAL /DESIGN	ENG-FEROZ SADID	APPROVED:Doc/Moe	ENG.AB MOMEN RAD	DRAWING TYPE	ELECTRICAL	PROJECT NAME	10CLASS ROOM WITH COMPUTER CLASS AND LAPRATORY.
		CHEEKED BY	ENG-M RAHIM	SCALE	AS SHOWN (A1)	SHEET No 50256	08/08	DRAWING TITLE	Mine Penal board elevation.
		TECH- APPROVED BY	ENG.AB.MATIN MAQOL	DATE	-09JON-2013				

PRODUCED BY AN AUTODESK EDUCATIONAL PRODUCT

NOTE:

1. All dimensions are in cm.
2. Wooden frime 7x5cm
3. Rusian Hardwood 30 mm thick, Sun dried / kiln dried, rounded edges and corners, painted with 2 coats brown color.
4. Graneet Stone

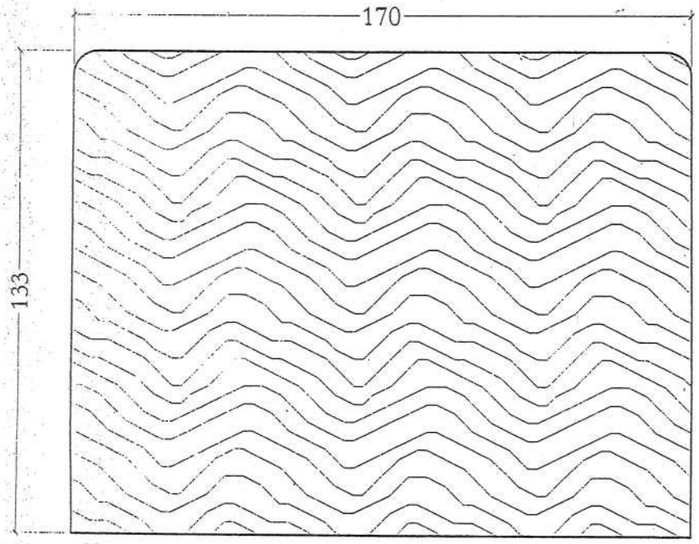

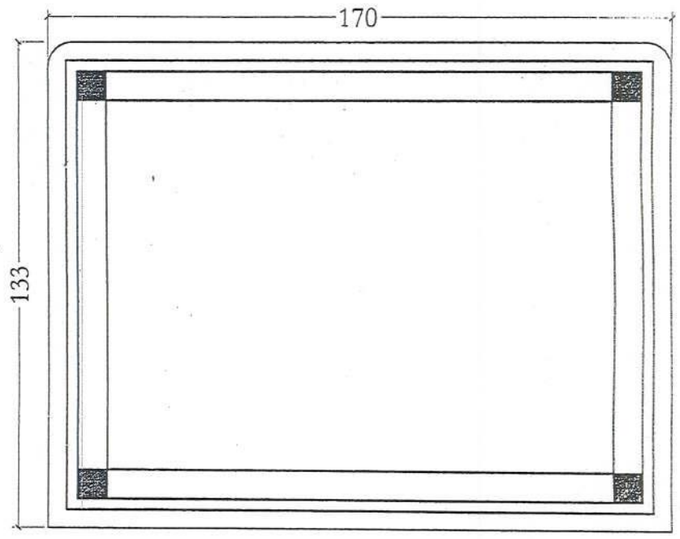

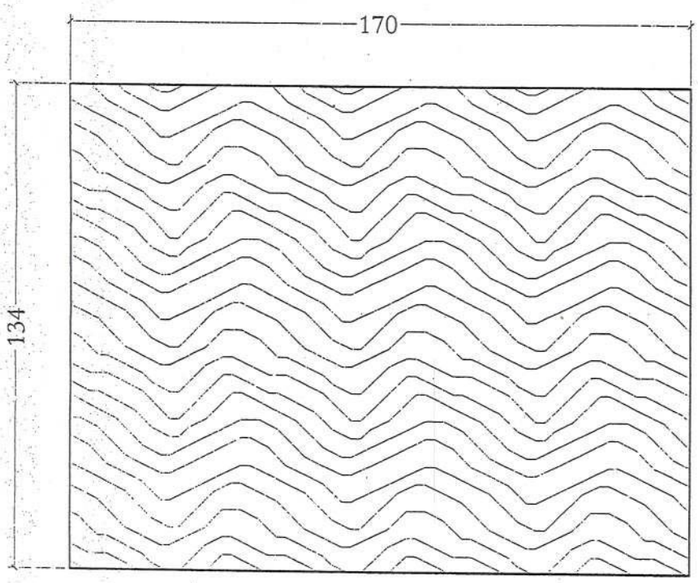

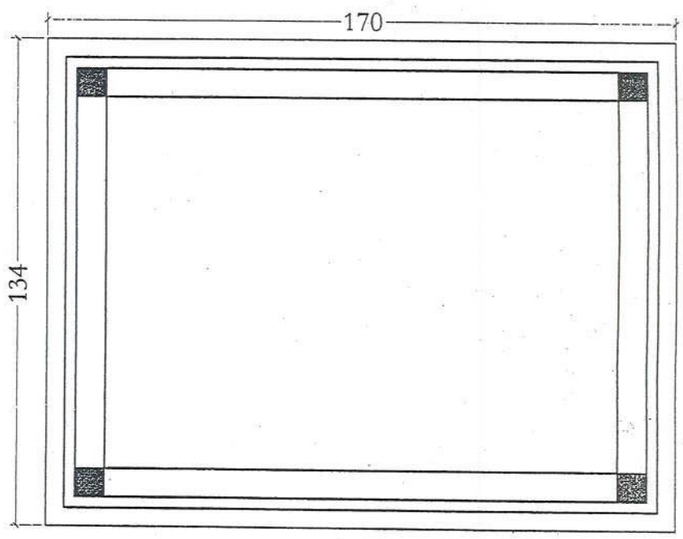

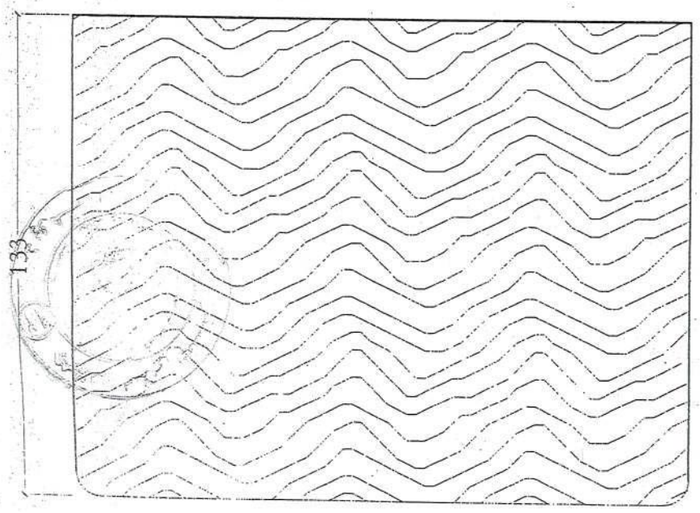

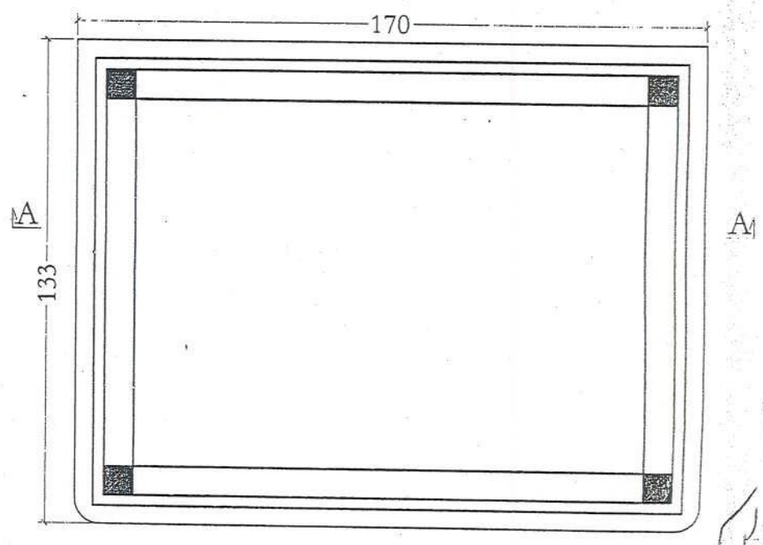

MINISTRY OF EDUCATION DEPARTMENT OF CONTRACTION	STANDARD SCHOOL DESIGN IN AFGHANISTAN	ARCHITECT/DESIGN	ARCH FARAH	APPROVED:Doc/Mod	ENG.AB.MOMEN RAD	TYPE	ARCHITECTURE	PROJECT NAME	LABRATORY DESK
		CHECKED BY	ARCH SAID BASOOL	SCALE	AS SHOWN (A3)		1/5	DRAWING TITLE	PLAN ,ELEVATION & DETAIL
		TECH-APPROVED BY	ENG.AB.MATIN MAQOL	DATE	2012	SHEET No			

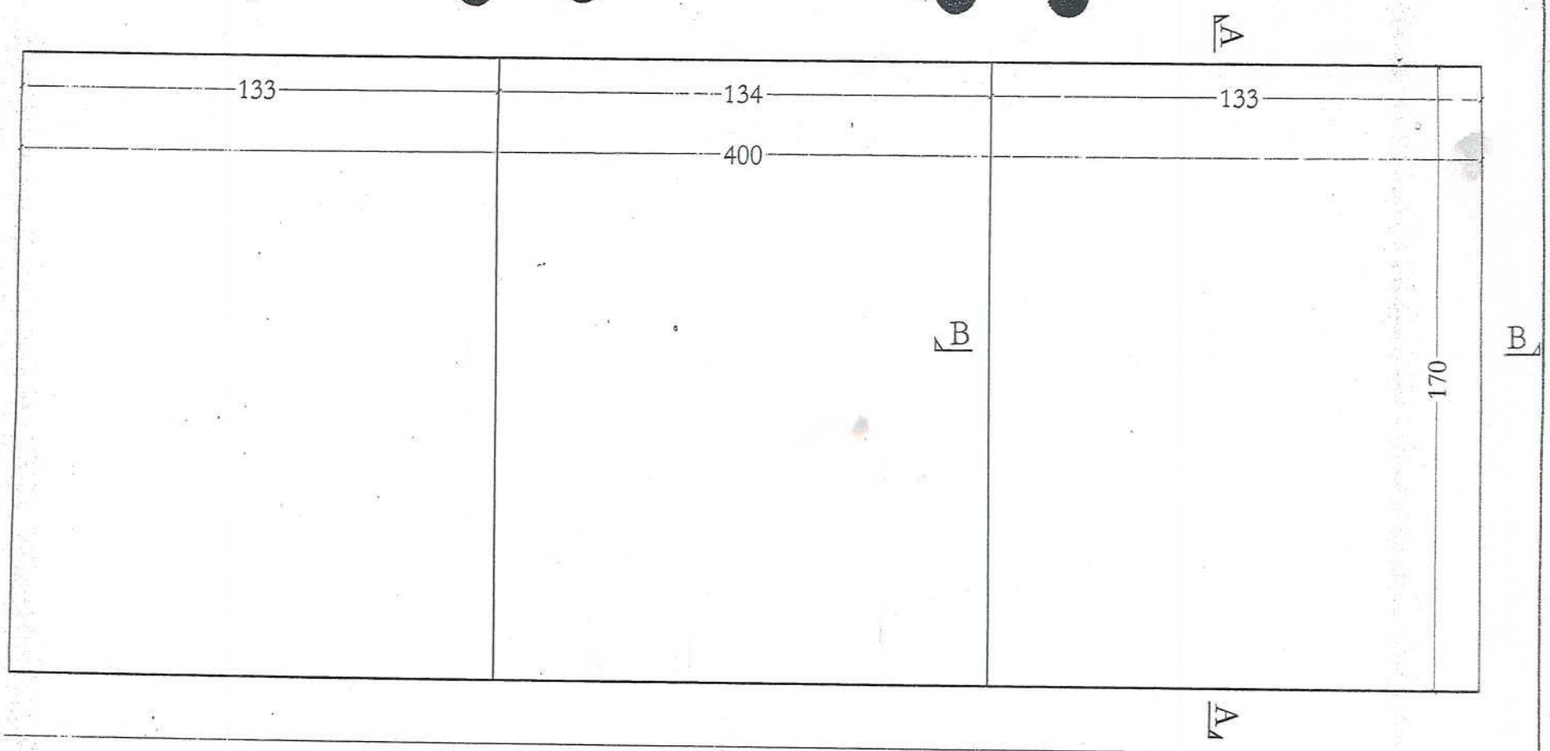

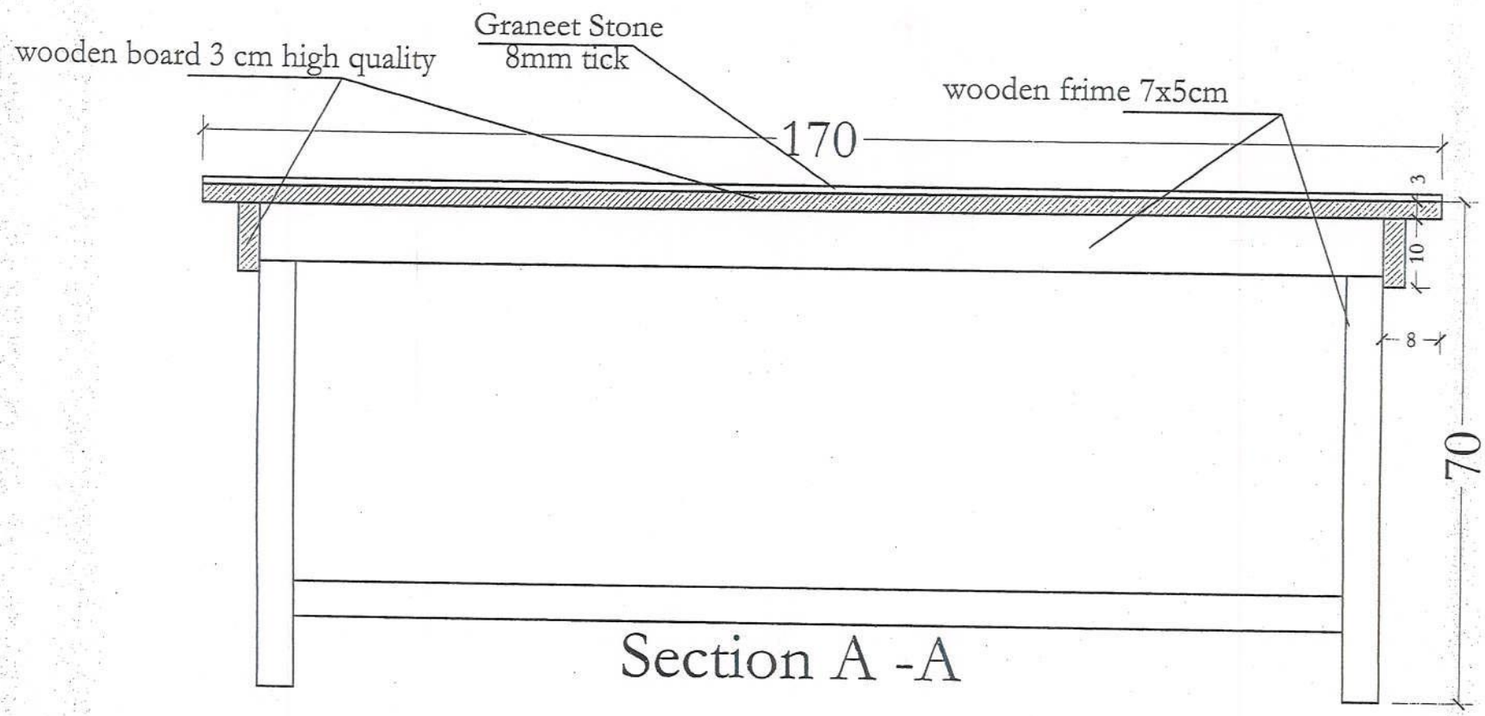

Section A -A

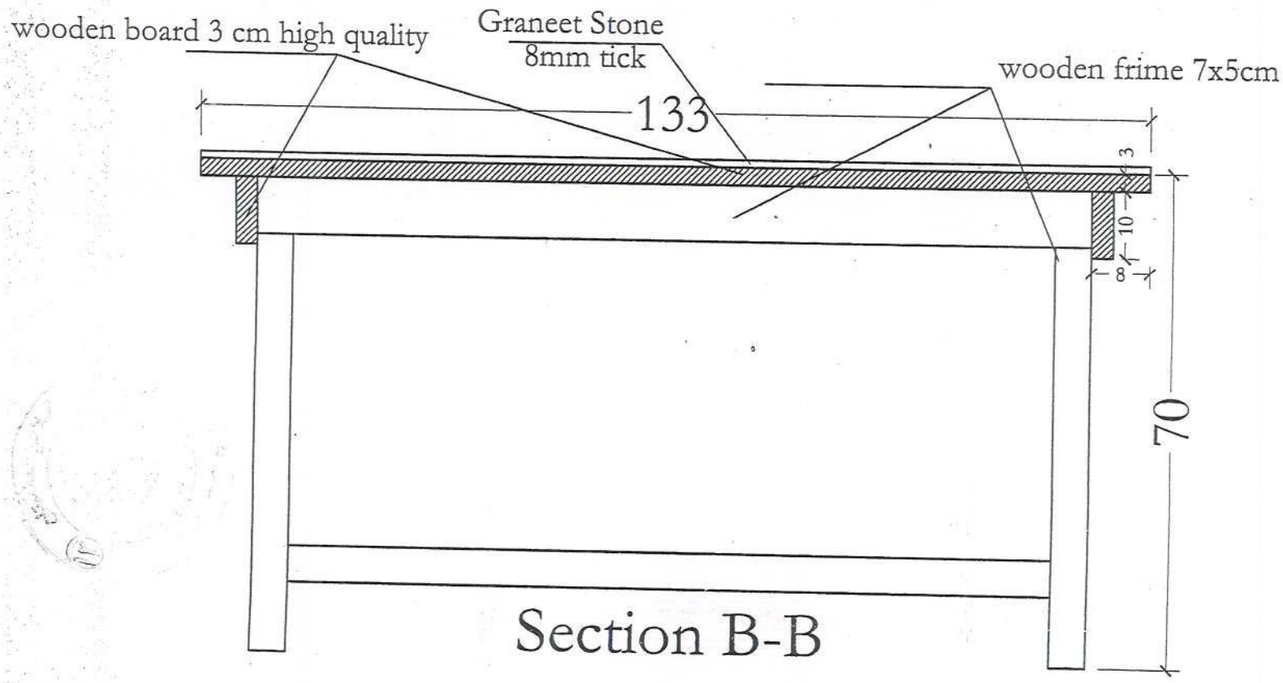

Section B-B

MINISTRY OF EDUCATION DEPARTMENT OF CONTRACTION	STANDARD SCHOOL DESIGN IN AFGHANISTAN	ARCHITECT/DESIGN	ARCH KAUSHILA	APPROVE:Doc/Mob	ENG.AR.MOMEN RAD	TYPE	ARCHITECTURE	PROJECT NAME	TABLE AND CHIER
		CHECKED BY	ARCH SAID RASOOL	SCALE	AS SHOWN (A3)	SHEET No	2/5	DRAWING TITLE	PLAN ,ELEVATION & DETAIL
		TECH-APPROVED BY	ENG.AR.MATIN MAQSI	DATE	2012				

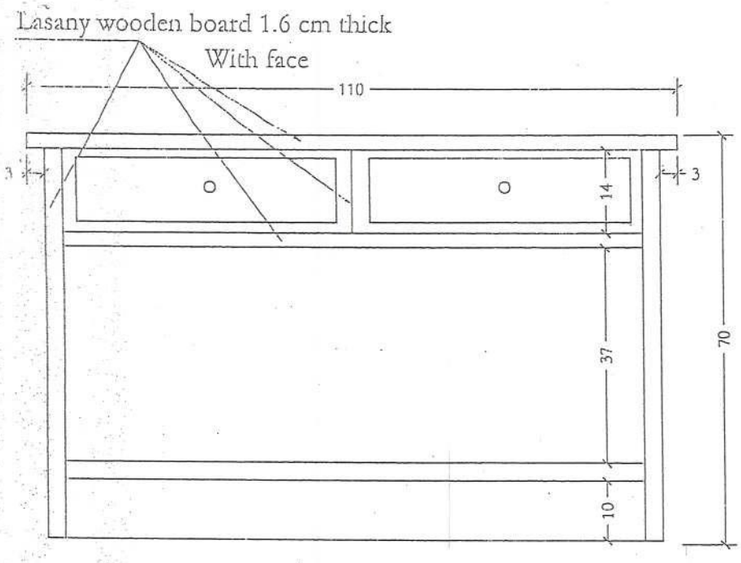

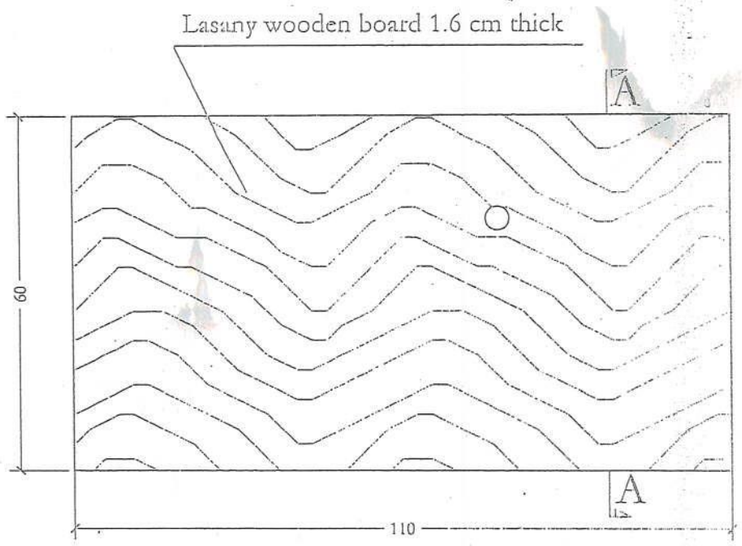

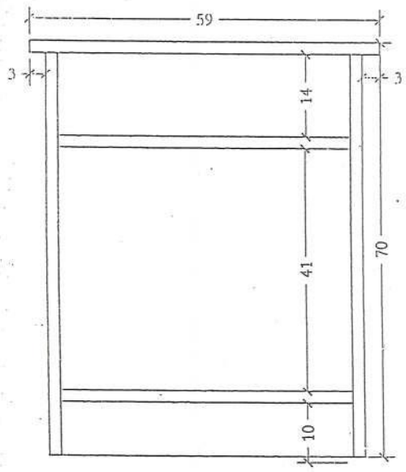

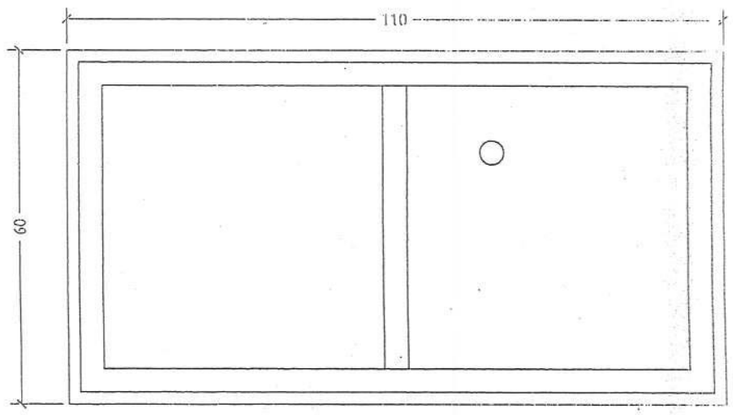

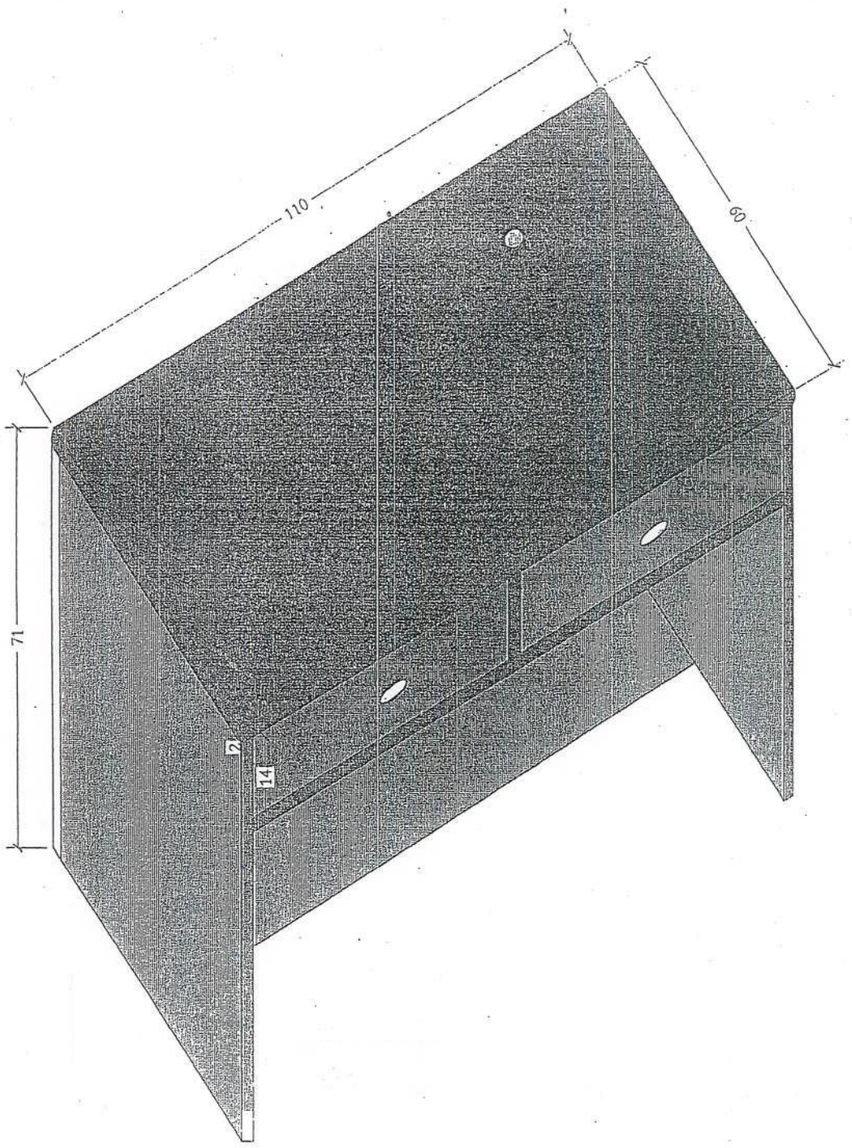

MINISTRY OF EDUCATION DEPARTMENT OF CONTRACTION	STANDARD SCHOOL DESIGN IN AFGHANISTAN	ARCHITECT/DESIGN	ARCH FARAH	APPROVER/Doc/Ilno	ENG.ABDUL KHALIQ	TYPE	ARCHITECTURE
		CHECKED BY	ARCH SAIM HASOOL	SCALE	AS SHOWN (A3)	SHEET No	3 / 5
		TECH. APPROVED BY	ENG.ABDULHAKIM	DATE	2012		

PROJECT NAME	COMPUTER LAB DESK
DRAWING TITLE	PLAN, ELEVATION & DETAIL

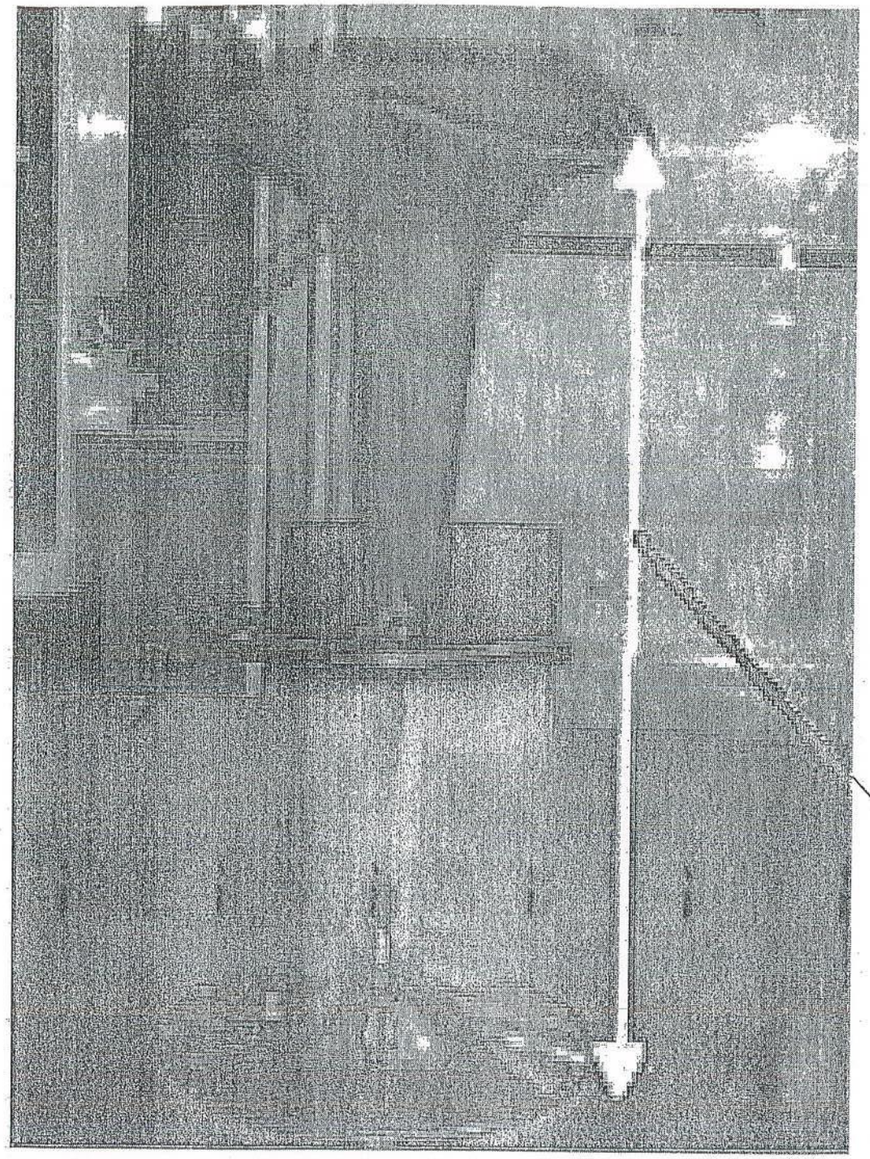

Red bar stool:
Height after stretch :78cm

Red bar stool:
Sitter: 38cm
Height before stretch :25cm

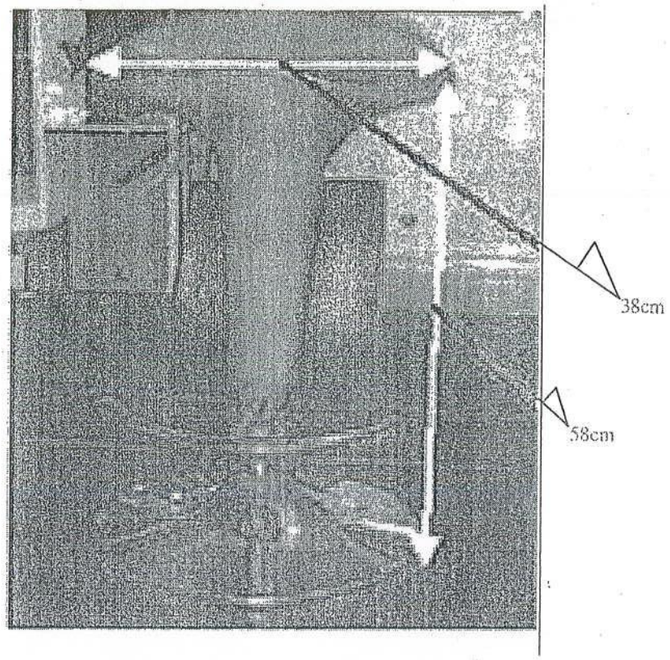

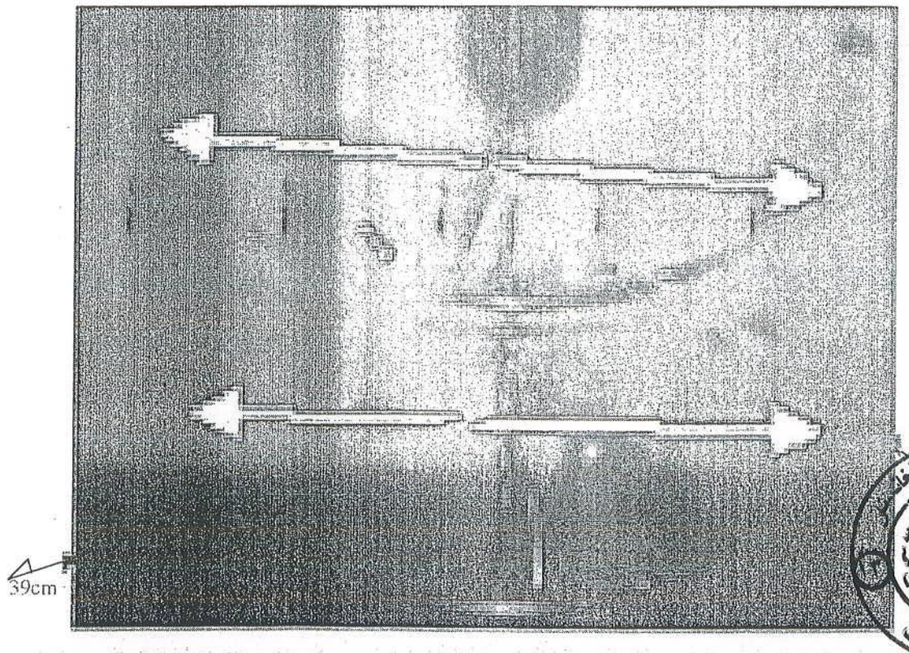

MINISTRY OF EDUCATION DEPARTMENT OF CONTRACTION	STANDARD SCHOOL DESIGN IN AFGHANISTAN	Prepared By	ENG.M Zahid Haidary	APPROVED:DoC.MoE	ENG.Momin Rad	TYPE	Architecture
		CHECKED BY	ENG.Said Rasool	SCALE	AS SHOWN (A3)	SHEET No	5 / 5
		TECH- APPROVED BY	ENG.AB.MATIN MAGO	DATE	11/2012		

PROJECT NAME: 30 CLASS ROOM SCHOOL BURNT BRICK IRON SHEET ROOF WITH LABORATORY AND COMPUTER.

DRAWING TITLE: LABORATORY CHAIR

۲۴

12.10.94

Ministry of Education
Department of Construction
Archtect and Engineering Section
Estimation department

Bill of Quantity chair & desk design for schools

برآورد احجام اولیه یک پایه میزوچوکی

No.	Description of Work	مشخصات فعالیت	Unit	Quantity	Unit Cost(USD)	Total Cost of	Remarks
1	Making chair &desk from wooden boards of khar & dry (tihcknes=3cm)best quality for chair & desk all nessary requrment	ساختن ونصب تخته خارخشک درجه اول بضخامت3سانتی متر باکیفیت عالی درکارمیزچوکی طبق نقشه باامور ایجابی	sqm	2.00			
2	Making & installation of steel frams size(30*30mm)and gage(18)with tow coats oil painting & filling one coat best quality for chair & desk all nessary requrment	ساختن ونصب پروفیل سایز(30*30)ملی متر باگیج 18معه رنگمالی روغنی وضدزنگ دوقلیه واستر باکیفیت عالی درکارچوکات میزچوکی طبق نقشه باامور	M/L	18.00			
3	primer coat zero polish& one layer varnish with filling & clear for chair & desk best quality for chair & desk all nessary requrment	استرو پالش صفرویک قلم ورنس بالای تخته باکیفیت عالی درکارمیزچوکی طبق نقشه باامور ایجابی	sqm	4.00			
4	prepare of best quality fiber installation for footing 7 top frame with special Glue all necessary requirment	تهیه وانداختن فایبر درپایه های پایینی وبالایی میز وچوکی باسرش مخصوص اهن وفایبر طبق نقشه	Ea	10.00			
	مجموعی						

باالحترام

LIST OF DRAWINGS:

A01 COVER SHEET AND GENERAL NOTES
A02 TOPE VIEWS AND ELEVATIONS OF CHAIR AND DESK
A03 SECTION AND ELEVATION OF CHAIR AND DESK
A04 SIZES AND DETAIL OF PLANKS (WOODEN BOARDS)

نوت برای ساخت چوکی و میز:-

۱-در پایه های چوکی ها و میز ها باید از فایبر کیفیت عالی استفاده گردد و توسط سریش مخصوص اهن و فایبر در داخل پایه بصورت فنی آن نصب گردد.

۲-قسمتی بالایی تخته ها بشکل دایره به اندازه قطر و عمق سری پیچ حک گردد تا بعد از پیچ نمودن پیچ با تخته هم سطح گردند.

۳-تخته ها باید توسط پیچهای فولادی به فرم فلزی بشکل فنی آن محکم یا پیچ گردند.

۴-قبل از انجام نمودن رنگمالی باید مطمین شد که تماماً پیچ ها، نت ها و جوینت های تخته ها و فلزات بشکل فنی آن محکم گردیده و قسمت های حک شده پیچها توسط گلگل پرکاری و صیقل گردیده است.

۵-تمامی اندازه ها و سایز های فیرمها نباید کمتر از گیج ۱۸ ضخامت و ۳۰ / ۳۰ میلیمتر باشد به جز از آهن قطی مانند نبه دار که به ضخامت گیج ۱۸ و ۳۰ / ۳۰ /۴۵ میلیمتر است.

۶- از تخته چوب های که برای ساخت چوکی و میز استفاده میگردد نباید کمتر از ضخامت ۳۰ میلیمتر باشد.

۷- از چوب که استفاده میگردد چوب خار به کیفیت عالی و کاملاً خشکیده باشد.

۸- یک قلم ضد زنگ را بالای چوکنت های فلزی البته که قبل از نصب تخته ها استعمال شود و یک قلم استر مخصوص چوب را بالای تخته ها استعمال کرد البته که بعد از پرکاری گلگل و صیقل کاری سطح تخته ها و فلزات .

۹-بعد از خشکیدن کامل استر و ضد زنگ، دو قلم رنگ روغنی را بالای تخته ها و فلزات استعمال گردد.

۱۰-جوینت های تخته ها باید بشکل چل وفاق توسط چسپ چوب مطابق نقشه باهم محکم گردند.

11- شرکت قراردادی مکلف است که قبل از انتقال مرفوع فرنیچر به ساحه جهت تثبیتی نمونه به تیم انجنیرمر جعه نماید و بعد از گرفتن تائید تیم انجنیری ریاست اکتشاف تعمیرات میتواند فرنیچر را به ساحه موردنظر انتقال دهد ، در غیر آن قابل قبول نمیباشد

GENERAL NOTE:

1-BEST QUALITY FIBER FOOTING TO BE INSTALLED FOR THE FOOTING AND TOPE FRAME WITH SPECIAL GLUE.
2-CIRCLE ERASURE TOPE SIDE OF TIMBER FOR SCREW ACCORDING TO THE HEAD OF SCREW DEPTH AND DIA.
3-SCREW PLANKS WITH STAINLESS STEEL SCREWS TO THE STEEL FRAME THE SCREW OR BOLT HEAD SHOULD BE FLASH TO THE PLANK SURFACE.
4-BEFORE PAINTING MAKE SURE ALL SCREWS AND JOINT ARE PROPERLY FIXED THEN USE OILY FILLER WHERE THE SCREWS ARE THEN APPLY PRIMER PAINTING.
5-ALL STEEL FRAMES THICKNESS AND SIZES SHOULD NOT BE LESS THEN GAGE 18 (30X30MM) AND NOSED BOX FRAME GAGE 18 (30X45MM)
6-ALL PLANKS (WOODEN BOARDS) SHOULD NOT BE LESS THEN 30MM THICKNESS UNLESS ITS SHOWN IN THE DWG.
7-ALL WOODEN BOARDS SHOULD BE MADE FROM KHAR WOOD, BEST QUALITY AND DRY.
8-AFTER FINISHING ALL WELDING, CARPENTRY WORKS AND FILLINGS APPLY ONE COAT ANTI RUST PAIN TO THE STEEL FRAMES AND ONE LAYER OF PRIMER COAT TO THE WOODEN BOARDS.
9-AFTER PROPERLY DRYING OF ANTI RUST AND PRIMER COAT APPLY OIL PAINT IN TWO COATS FOR EACH (STEEL FRAMES AND WOODEN BOARDS)
10-WOODEN PLANKS SHOULD BE JOINT WITH USING GLUE AND SCREW ACCORDING TO THE DETAIL DRAWING.

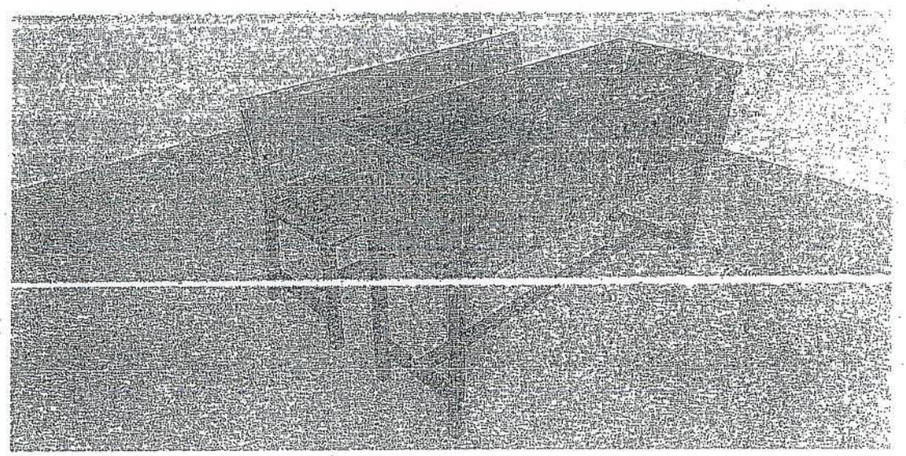

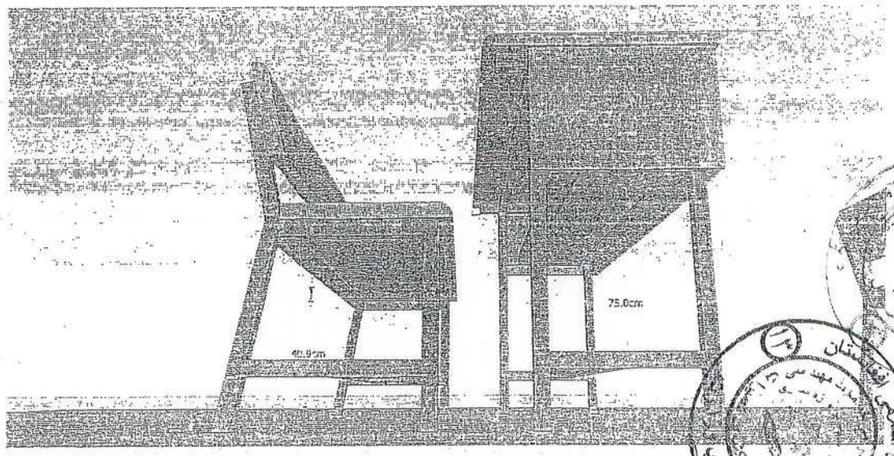

MINISTRY OF EDUCATION
DEPARTMENT OF CONTRACTION

STANDARD SCHOOL DESIGN
IN AFGHANISTAN

DESIGN BY: DAWD SAFI
CHECKED BY: DAWD SAFI
SCALE: AS SHOWN (A3)
ARCHITECTURE

PROJECT NAME: STANDARD CHAIR & DESK DESIGN FOR SCHOOLS

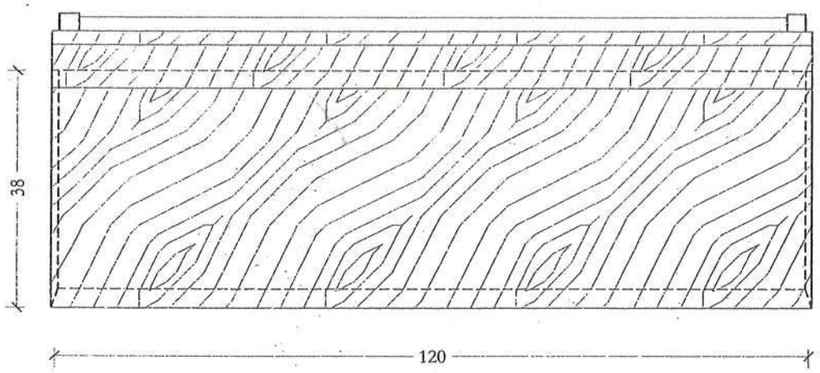

نمای فوقانی چوکی

TOP VIEW OF CHAIR

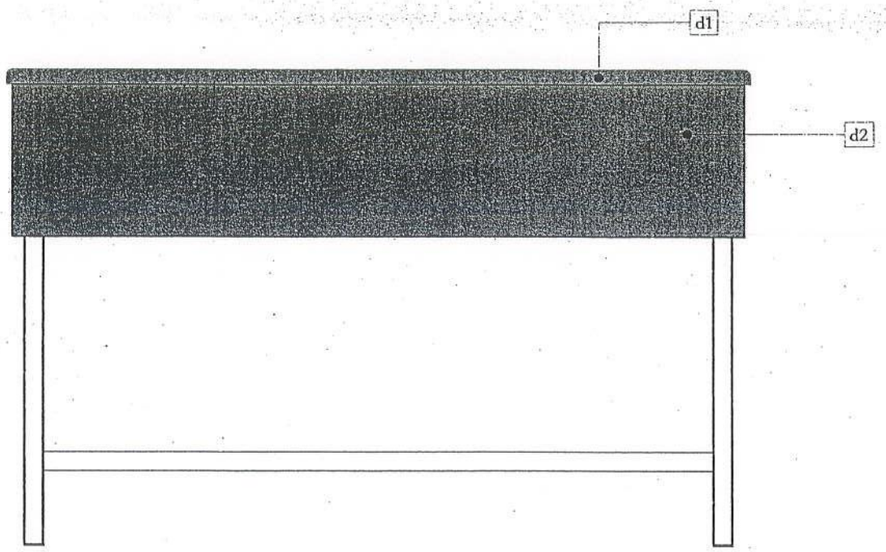

نمای عقبی میز

BACK ELEVATION OF DESK

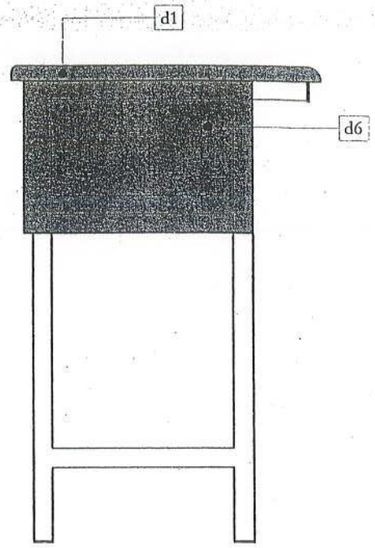

نمای جانبی میز

SIDE ELEVATION OF DESK

نبشهای محیط سطح بالای تخته ها باید بشکل مدور به شعاع ۳ سانتی متر قسمت مقابل
تخته ها و قسمتهای دیگر محیط تخته ها را به شعاع سانتی۱ متر مدور گردد.

ROUND CUT EDGES OF BOARDS TOPE SURFACES IN 3CM RADIUS THE FRONT EDGES
AND 1CM RADIUS OTHER TOPE BOUNDARIES EDGES

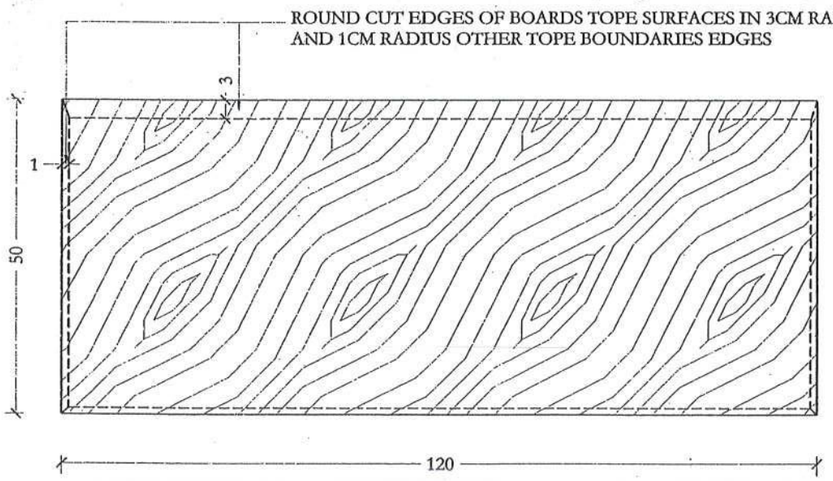

نمای فوقانی میز

TOP VIEW OF DESK

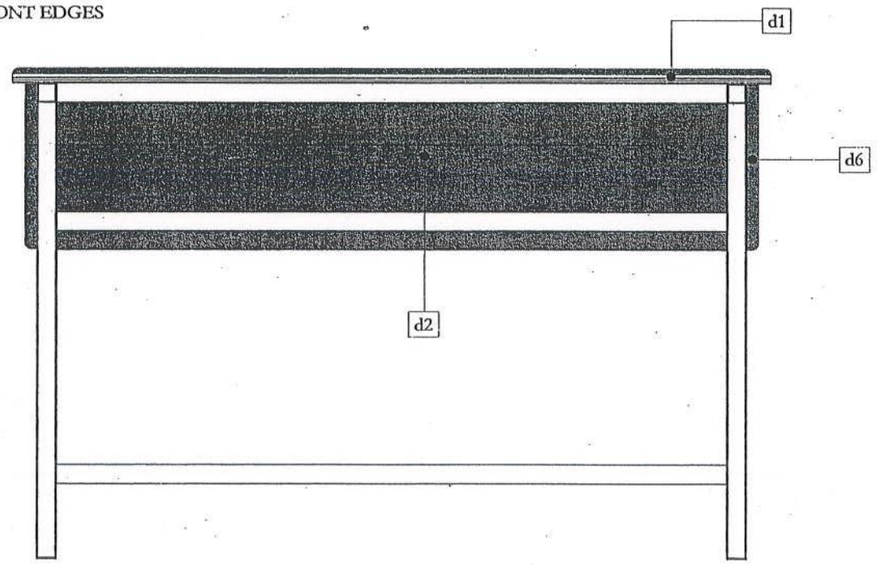

نمای مقابل میز

FRONT ELEVATION OF DESK

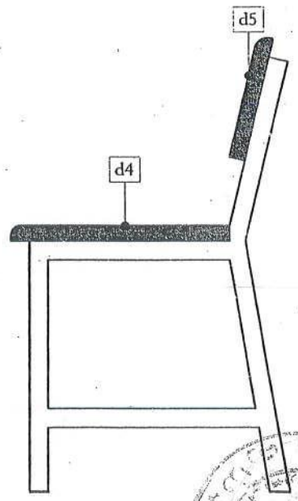

نمای جانبی چوکی

SIDE ELEVATION OF CHAIR

MINISTRY OF EDUCATION DEPARTMENT OF CONTRACTION	STANDARD SCHOOL DESIGN IN AFGHANISTAN	ARCHITECT/DESIGN	ARC:MAIWAND.M	APPROVED:Doc/Moe	ENG:AB.MOMIN.RAAD	TYPE	A02	PROJECT NAME	STANDARD CHAIR & DESK DESIGN FOR SCHOOL
		CHECKED BY	QAIS SAFI	SCALE	AS SHOWN (A3)	SHEET No	2/4	DRAWING TITLE	PLANS AND ELEVATIONS OF CHAIR & DESK
		TECH-APPROVED BY	S. RASUL AFGHANI	DATE	28,1,2014				

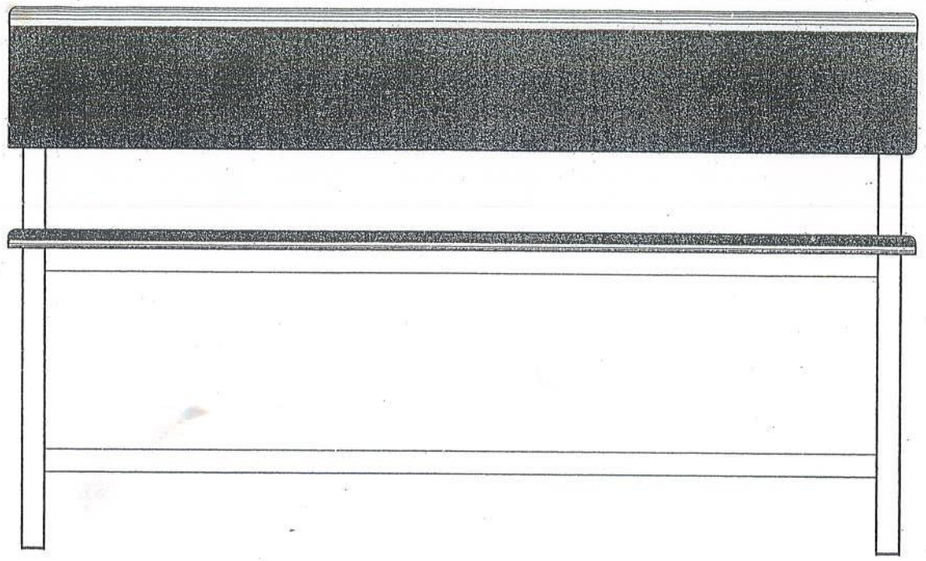

نمای مقابل چوکی

FRONT ELEVATION OF CHAIR

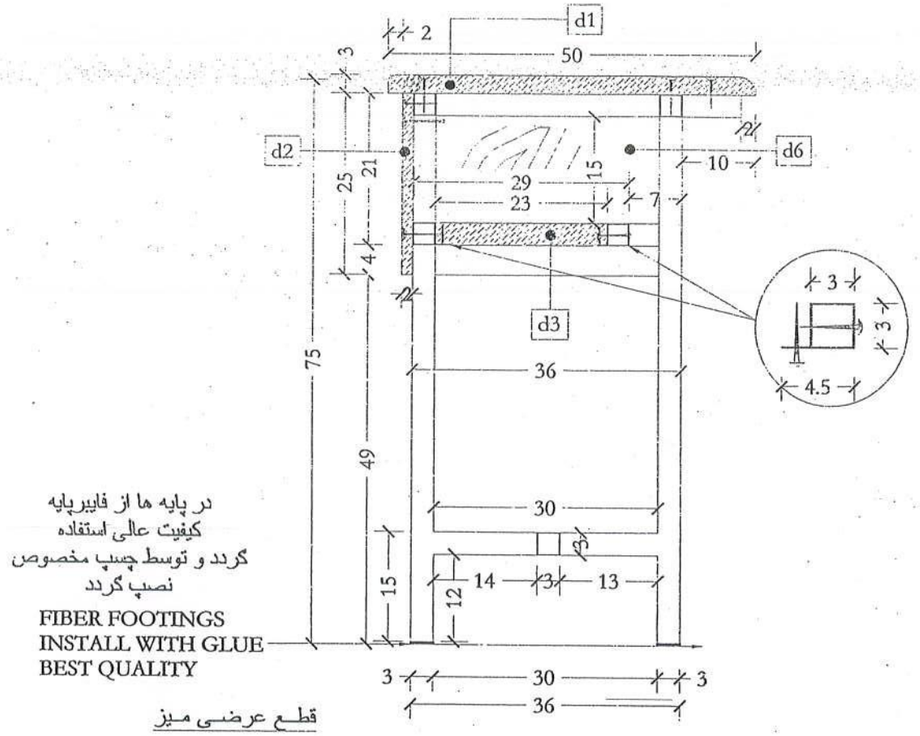

در پایه ها از فایبرپایه
کیفیت عالی استفاده
گردد و توسط چسپ مخصوص
نصب گردد

FIBER FOOTINGS
INSTALL WITH GLUE
BEST QUALITY

قطع عرضی میز

SECTION OF DESK

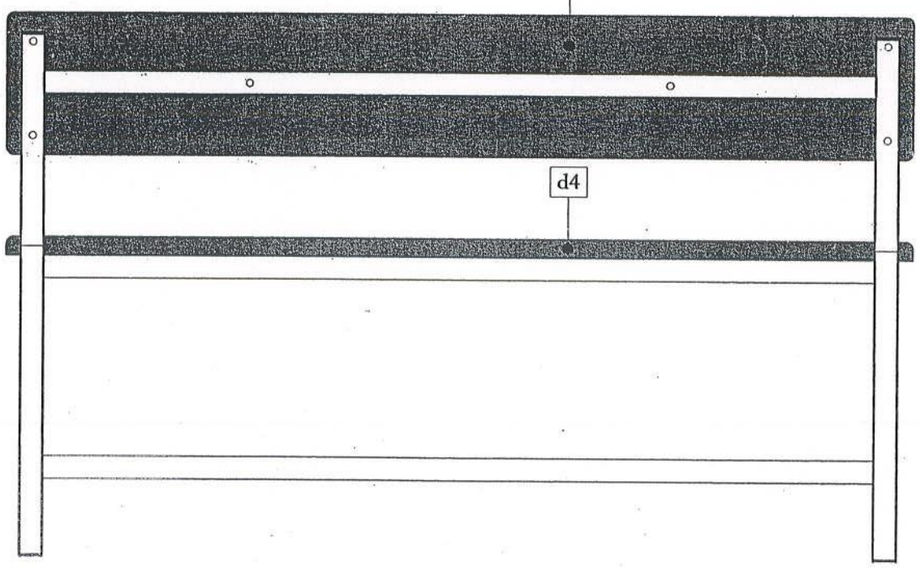

نمای عقبی چوکی

B ACK ELEVATION OF CHAIR

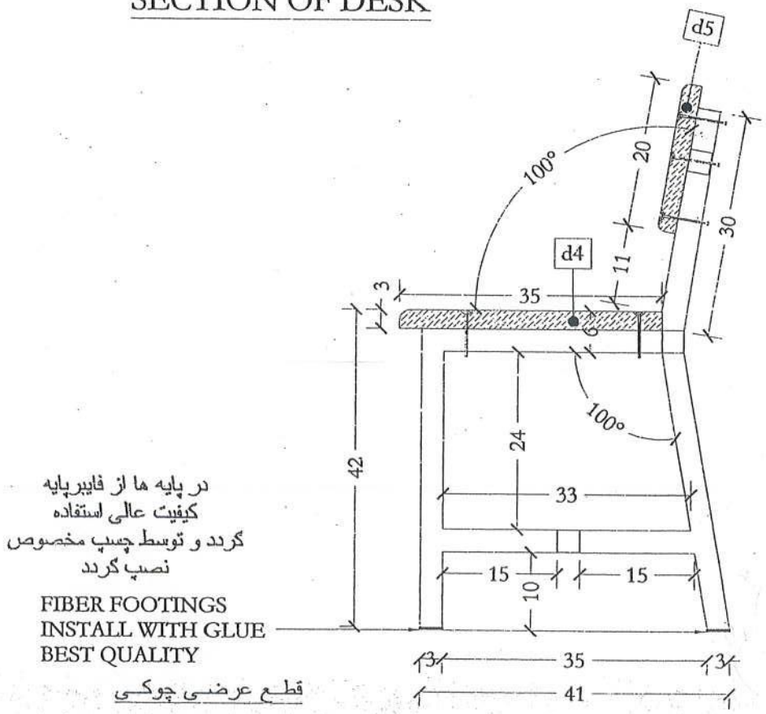

در پایه ها از فایبرپایه
کیفیت عالی استفاده
گردد و توسط چسپ مخصوص
نصب گردد

FIBER FOOTINGS
INSTALL WITH GLUE
BEST QUALITY

قطع عرضی چوکی

SECTION OF CHAIR

MINISTRY OF EDUCATION DEPARTMENT OF CONTRACTION	STANDARD SCHOOL DESIGN IN AFGHANISTAN	ARCHITECT/DESIGN	ARC:MAIWAND.M	APPROVED:Doc/Mce	ENG:AB.MOMIN.RAAD	TYPE	A03	PROJECT NAME	STANDARD CHAIR & DESK DESIGN FOR SCHOOL
		CHECKED BY	QAIS SAFI	SCALE	AS SHOWN (A3)	SHEET No	3/4	DRAWING TITLE	ELEVATION & SECTIONS
		TECH-APPROVED BY	S. RASUL AFGHANI	DATE	28,1,2014				

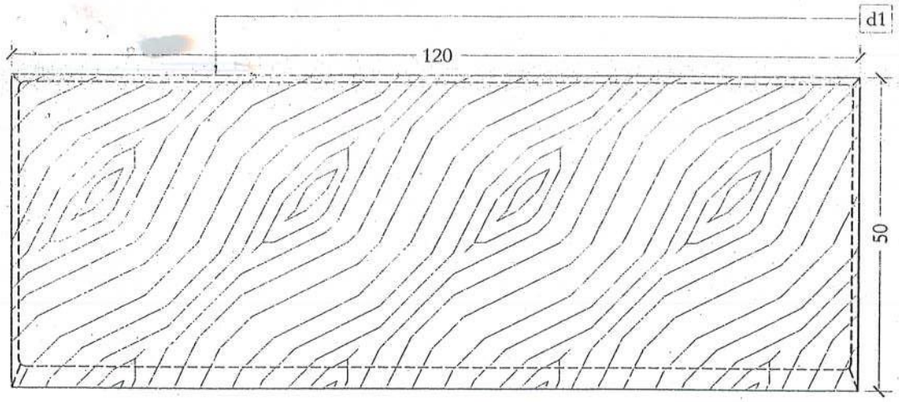

PLANK D1 DETAIL

تخته چوبی شماره ۱

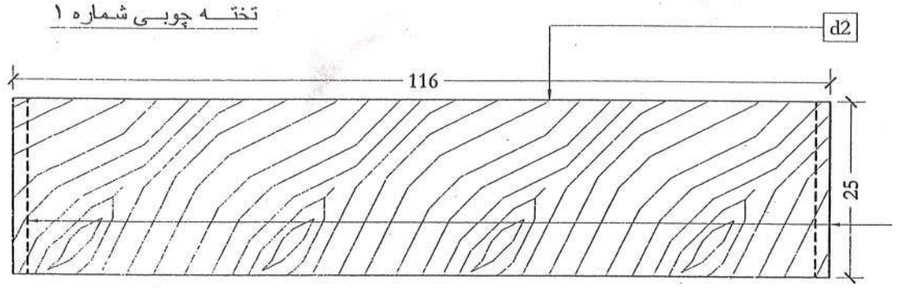

PLANK D2 DETAIL

تخته چوبی شماره ۲

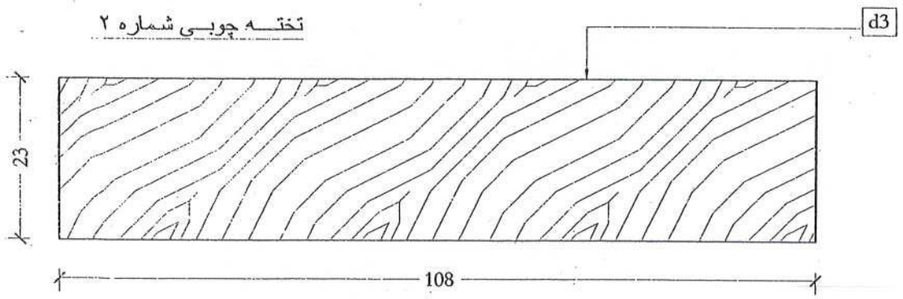

PLANK D3 DETAIL

تخته چوبی شماره ۳

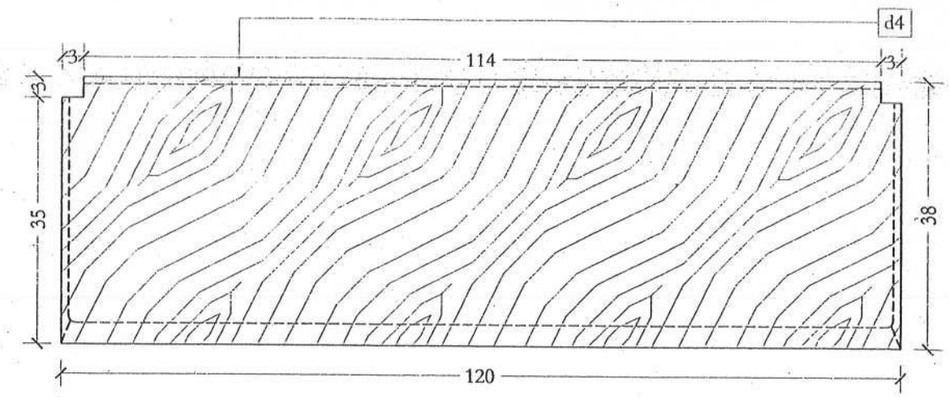

PLANK D4 DETAIL

تخته چوبی شماره ۶

CUT ENDS AS SHOWN
IN 45 DEGREE

قسمت های تخته ها که
نشانی گردیده به زاویه
۴۵ درجه قطع گردد

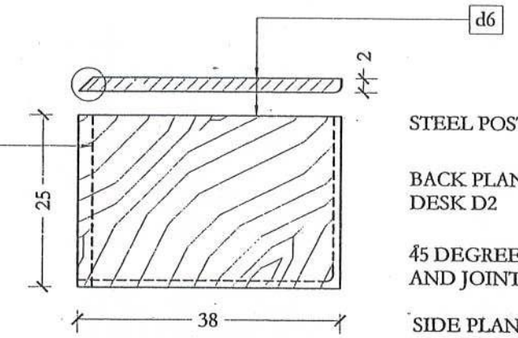

تخته چوبی شماره ۶

SIDE PLANK D6 DETAIL

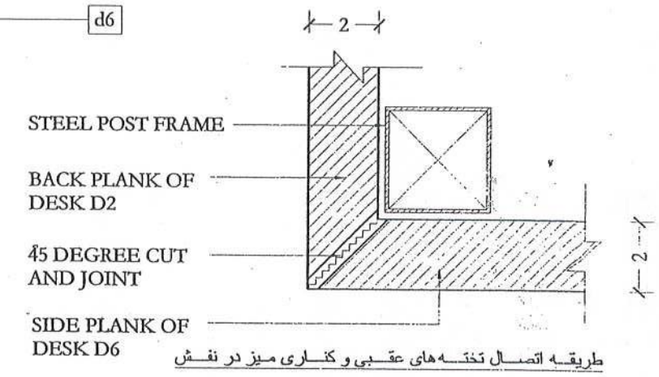

طریقه اتصال تخته‌های عقبی و کناری میز در نفش

SIDE AND BACK
PLANKS JOINT DETAIL

نبشهای محیط سطح بالای تخته ها باید بشکل مدور به شعاع ۳ سانتی متر قسمت مقابل
تخته ها و قسمتهای دیگر محیط تخته ها را به شعاع سانتی۱ متر مدور گردد.

ROUND CUT EDGES OF BOARDS TOPE SURFACES
IN 3CM RADIUS THE FRONT EDGES
AND 1CM RADIUS OTHER TOPE BOUNDARIES EDGES

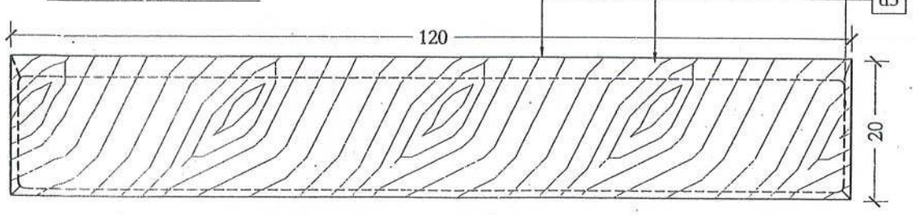

PLANK D5 DETAIL

تخته چوبی شماره ۵

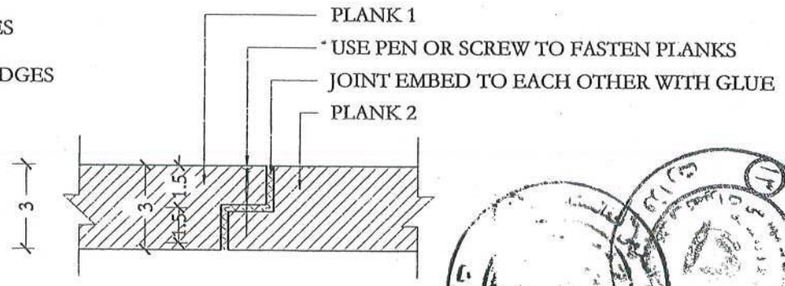

PLANKS JOINT METHOD DETAIL

طریقه اتصال تخته ها

MINISTRY OF EDUCATION
DEPARTMENT OF CONTRACTION

STANDARD SCHOOL DESIGN
IN AFGHANISTAN

ARCHITECT/DESIGN	ARC:MAIWAND.M	APPROVED:Doc/Moe	ENG:AB.MOMIN.RAAD	TYPE	A04	PROJECT NAME	STANDARD CHAIR & DESK DESIGN FOR SCHOOL
CHECKED BY	QAIS SAFI	SCALE	AS SHOWN (A3)	SHEET No	4/4	DRAWING TITLE	PLANKS SIZES AND PLANKS JOINT DETAIL
TECH-APPROVED BY	S. RASUL AFGHANI	DATE	28,1,2014				

23/10/93

Ministry of Education
Department of Construction
Archtect and Engineering Section

Bill of Quantity of5set latrine with Burnt Bricks and Steel I Beam roof - code : Lat:010

افرمشخصات مبرز5 غرفه ای خشت پخته باپوشش گادرفلزی و آهن پوش - کود مبرز 010

S.No	Particular of Activities	مشخصات فعالیت	quantity	Unit	Unit Cost(USD)	Total Cost	Remarks
1	Excavation of foundation in Grad 3 land	کندنکاری تهداب درزمین قسم سوم باموراجابی	34.84	Cum.			
2	Stone Masonry of foundation with 1:6 mortar with all necessary work	سنگ کاری غرقه ازسنگ پارچه کوهی بامخلوط 1:6 باموراجابی	28.04	Cum.			
3	Supper Stone Masonry with cement mortar 1:6 with all necessary work	سنگ کاری کرسی ازسنگ پارچه کوهی بامخلوط 1:6 باموراجابی	32.73	Cum.			
4	RCC(1:1.5:3) rings on the top of supper stone masonry 20cm with all necessary work	کانکریت سیخدارریگ بالای سنگ کاری وسلب غرفه ها بامخلوط 1:1.5:3 باموراجابی	4.60	Cum.			
5	Filling of flooring with soil inculding compaction 1 m with all necessary work	پرکاری فرش ازخاک مساعد به ضخامت 1 متر معه متراکم ساختن آن باموراجابی	11.67	Cum.			
6	Filling of floor & walkways and soak pit with gravel inculding compaction 20 cm with all necessry work	پرکاری فرش وپیاده روها ازجغل به ضخامت 20 سانتی متر معه چاه جازب با متراکم ساختن آن وامورایجابی	6.00	Cum.			
7	Bricks masonry burnt bricks with (1:6)I mortar(width = 35 cm) with all necessary work	خشت کاری ازخشت پخته بامخلوط مصاله 1:6 به عرض 35 سانتی متربامورایجابی	24.75	Cum.			
8	RCC(1:1.5:3) rings on the top of brick masonry 20cm with all necessary work	کانکریت سیخدار رینگ بالای خشت کاری به ضخامت 20 سانتی متر و سرپوش چاه مخلوط 1:1.5:3 با امورایجابی	2.00	Cum.			
9	PCC(1:2:4) of flooring, stair & walkways with 10 cm thickness with all necessary work	کانکریت بدون سیخ فرش.زینه وپیاده به ضخامت 10 سانتی متر بامخلوط 1:2:4 باموراجابی	4.88	Cum.			
10	Steel I beam 140*70*5 for roof with all necessary work	گادرفلزی سایز 5*70*140 برای پوشش باامور ایجابی	40.00	M/L			
11	Oil painting of steel I beam 2 coat with all necessary work	رنگمالی روغنی ضد زنگ گادرفلزی دو قلمه باموراجابی	40.00	M/L			
12	Planking work over wooden truss (thickness 2 cm) with all necessary work	تخته فرش به ضخامت 2 سانتی متر بالای گادر ها ازچوب خارباموراجابی	21.79	Sqm.			
13	tow layer Mat(Borya) work over planking with all necessary work	انداختن دو لا بوریا بالای تخته فرش باموراجابی	21.79	Sqm.			
14	Clay and dry soil over Mat(Borya) 15 cm Thick with all necessary work .	غوره گل وخشکی به ضخامت 15 سانتی متر بالای بوریا باموراجابی	26.20	Sqm.			
15	Wooden truss with Iron sheet from Khar wood and 24 guage iron sheet with all necessary work	ساختن قیچی و اهن پوش از چوب خار و آهن چادر نالی دار 24 گیج با امور ایجابی آن	34.00	Sqm.			
16	Mud plaster (kagel) tow layer 2.5 cm Thick including plastic one layer with all necessary work	کاه گل کاری دردوطبقه به ضخامت 2.5 سانتی متر وپلاستیک یک لا باموراجابی	26.20	Sqm.			

17	Bricks masonry in roofing work parapet (Kharand) with 1:6 mortar 40 and 15 cm with all necessary work	خشت کاری خرند ازخشت پخته بامخلوط مصاله 1:6 به عرض 40 و 15 سانتی متربامورایجابی	5.12	Cum.			
18	preparation and Installation concrete well (chak) with soak pit according to the drawing with all necessary work	تهیه و نصب چک کانکریتی معه سرپوش اهنکانکریت مطابق نقشه باموراجابی	1.00	Ea			
19	Making and installation of prefabricate slab size 160*90*10 according to the drawing with all necessary	ساختن ونصب پلیت های فابریکه یی چاه جازب عقب تعمیر به سایز 10*90*160 سانتی متر مطابق نقشه باموراجابی	7.00	Ea			
20	Gutters work (Vertical from GI sheet 24 gage 15X10 cm) with all necessary work	ساختن ونصب ناوه خسی سایز10*15 ازآهن چادر24 گیج باموراجابی	8.00	M/L			
21	Inside Plaster work (1:4) Mortar with smooth finishing with all necessary work	پلسترکاری داخلی بامخلوط 1:4 معه صفاکاری واموراجابی	116.93	Sqm.			
22	White washing insidside 3 coats with 60% emulsion with all necessary work	رنگمالی آبی داخلی بامخلوط 60 فیصد پلاستیک سه قلمه باموراجا	116.93	Sqm.			
23	Carpentry work (Making of Window Complete)	ساختن ونصب کلکین ازچوب خارمعه آهن جامه باموراجابی	4.40	Sam.			
24	Carpentry work (Making of single doors Complete)	ساختن ونصب دروازه یک پله یی ازچوب خارمعه آهن جامه وقفل باموراجابی	9.36	Sam.			
25	Oil painting of windows and doors(3 coats) with all necessary work	رنگمالی روغنی کلکین ودروازه سه قلمه باموراجابی	26.00	Sam.			
26	Installation of glasses 4mm with chute with all necessary work	نصب شیشه 4 ملی معه چفتی باموراجابی	4.00	Sam.			
27	Out side plaster work (with 1: 4 motor) and smooth finishing with all necessary work	پلسترکاری خارجی بامخلوط 1:4 معه صفاکاری واموراجابی	78.08	Sqm.			
28	Making of steel door with all necessary work	ساختن ونصب دروازه فلزی تشناب معه آهن جامه وقفل باموراجابی	0.80	Sqm.			
29	White washing with 100 % plastic emulsion (outside) 3 coats with all necessary work	رنگمالی آبی روی کار بامخلوط 100 فیصد پلاستیک سه قلمه باموراجابی	78.08	Sqm.			
30	Installation of fly screen with chufti complete	نصب جالی مگس معه چفتی باموراجابی	1.50	Sqm.			
31	Pointing supper stone masonry with 1:3 mortar with all necessary work	هنگاف کاری کرسی بامخلوط مصاله 1:3 باموراجابی	69.83	Sqm.			
32	Making of handrell ramp with all necessary work	ساختن ونصب کتاره فلزی رمپ معه رنگمالی روغنی آن مطابق نقشه باموراجابی	10.50	M/L			
33	PVC 4 inch pipe for ventilation with all necessary work	نصب پایپ پلاستیکی 4 انچ هوا کش با امور ایجابی	25.00	M/L			
34	preparation and Installation water tank and sank in the corridor according to the drawing with all necessary	تهیه ونصب تانکی آب با دستشوی در داخل دهلیز عمومی معه فتنگ باب و ملحقات آن مطابق نقشه باموراجابی	1.00	Ea			
35	preparation and Installation of grabs according to the drawing with all necessary work	تهیه ونصب دستگیر در داخل تشناب معیوبین مطابق نقشه باموراجابی	2.00	Ea			
	Total	قیمت مجموعی					

PRODUCED BY AN AUTODESK EDUCATIONAL PRODUCT

MINISTRY OF EDUCATION

(MOE/ISD)

DEPARTMENT OF CONSTRUCTION / TECHNICAL SERVICES

(ISD)

TYPICAL 5 LATRINE BRNUT BRICK I-BEAM

ARCHITECTURE

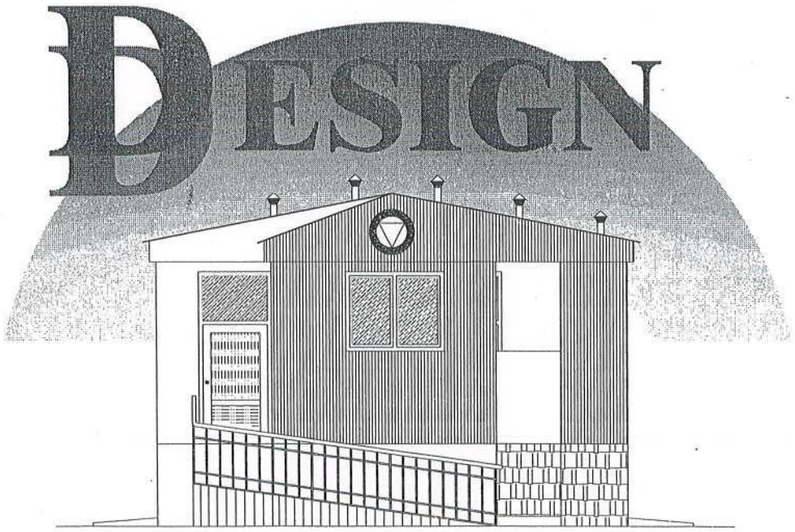

FEB 2014

PRODUCED BY AN AUTODESK EDUCATIONAL PRODUCT
PRODUCED BY AN AUTODESK EDUCATIONAL PRODUCT
PRODUCED BY AN AUTODESK EDUCATIONAL PRODUCT

PRODUCED BY AN AUTODESK EDUCATIONAL PRODUCT

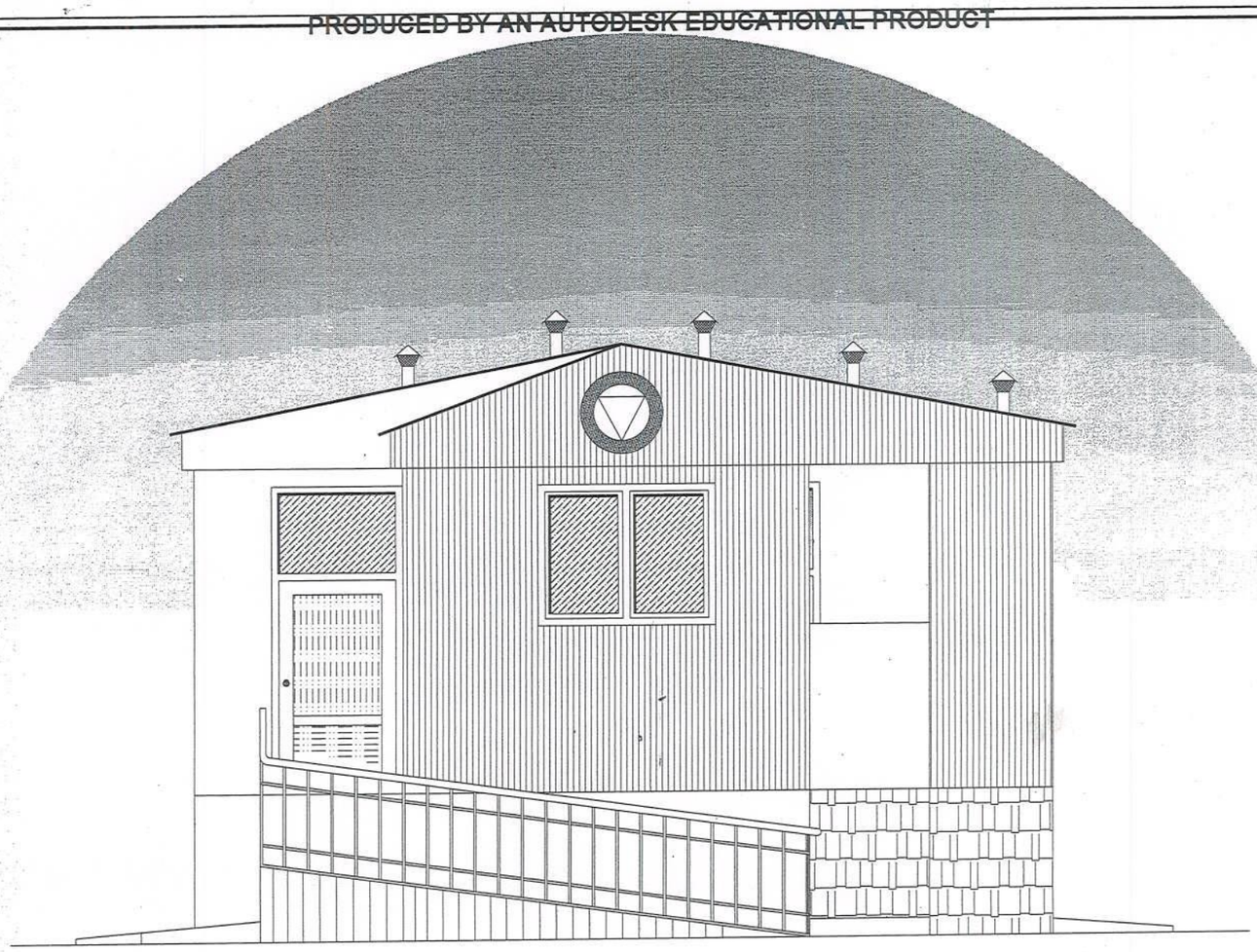

FRONT ELEVATION

Note:
All dimensions are in cm .

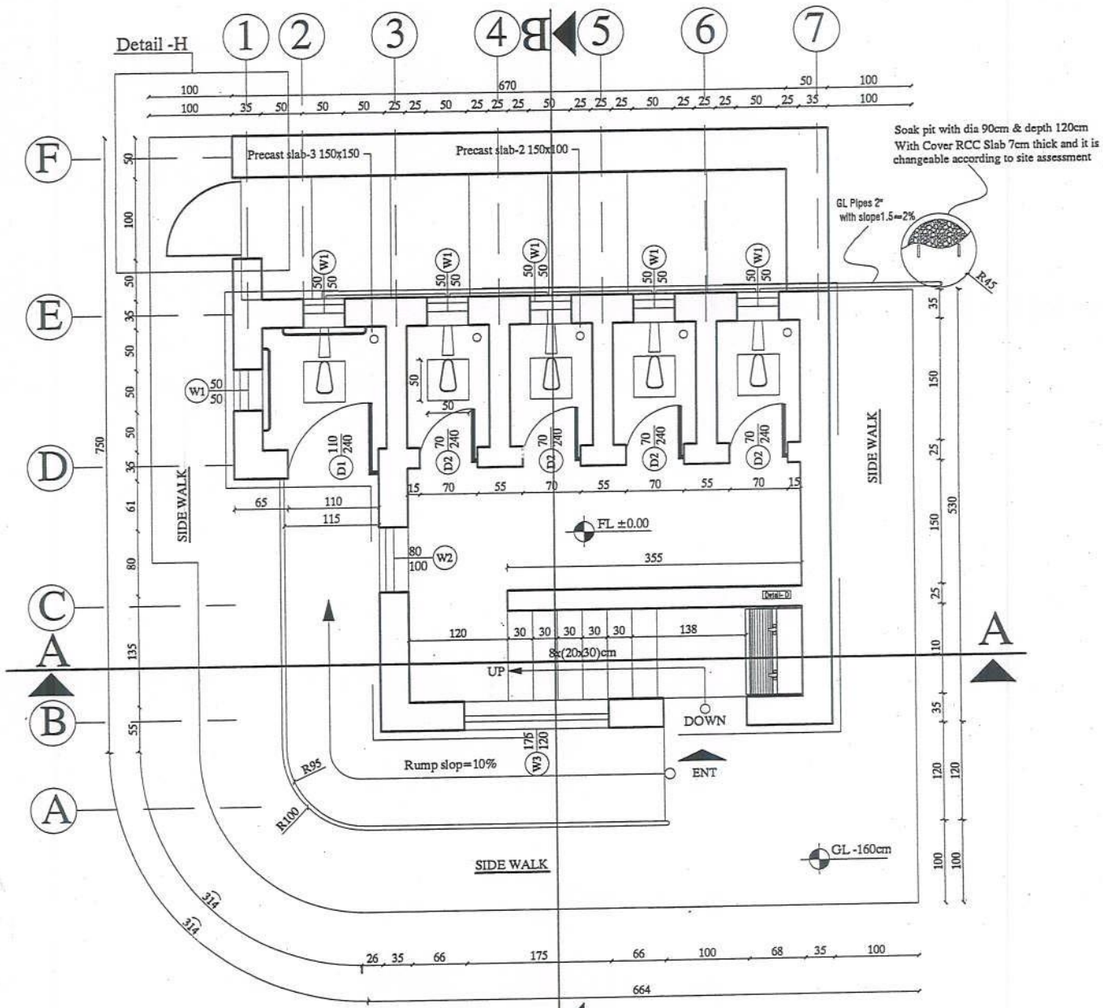

GROUND FLOOR PLAN

Note:
All dimensions are in cm .

MINISTRY OF EDUCATION DEPARTMENT OF CONSTRUCTION	STANDARD SCHOOL DESIGN IN AFGHANISTAN	ARCHITECT/DESIGN	AH.MAWAND .M.W	APPROVED:Doc/Mon	ENG.AB.MOMIN,RAAD	TYPE	ARCHITECTURE	PROJECT NAME	5-LATRINE FROM BUNT BRICK I BEAM ROOF
		CHECKED BY	ENG.S.RASOOL AFGHANI	SCALE	AS SHOWN (A3)	CODE	SHEET No 1/8	DRAWING TITLE	GROUND FLOOR PLAN & FRONT ELEVATION.
		TECH. APPROVED BY	ENG.AB.MATIN MAQOOL	DATE	5-23-2014	Latrine-010			

PRODUCED BY AN AUTODESK EDUCATIONAL PRODUCT
PRODUCED BY AN AUTODESK EDUCATIONAL PRODUCT
PRODUCED BY AN AUTODESK EDUCATIONAL PRODUCT

PRODUCED BY AN AUTODESK EDUCATIONAL PRODUCT

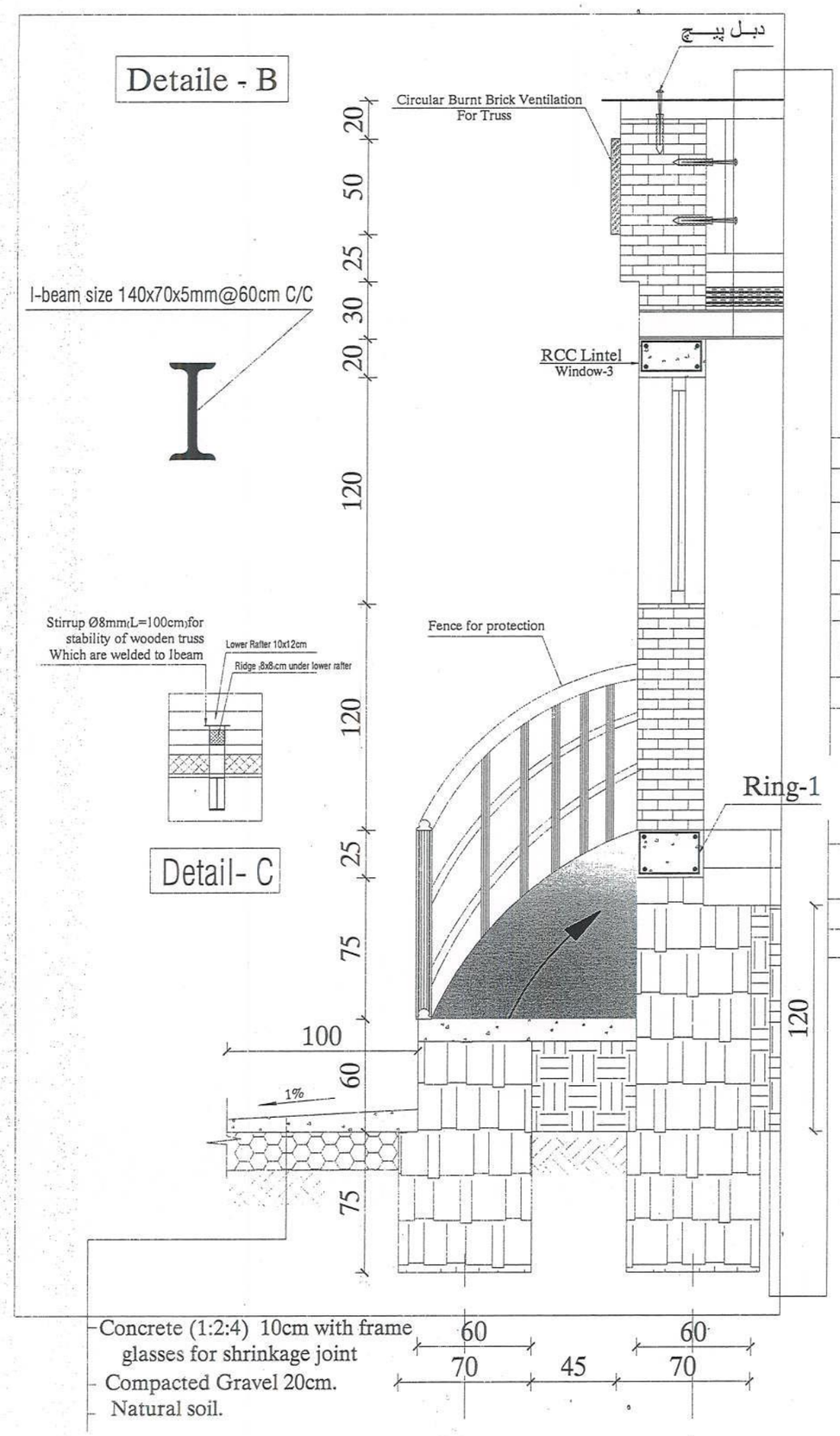

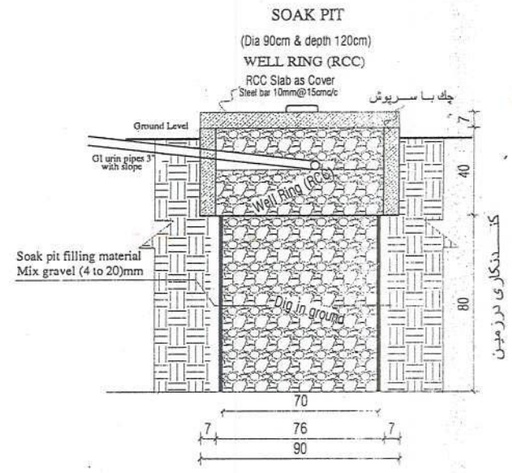

Section A-A

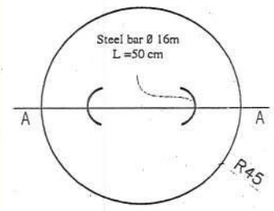

RCC Slab (Cover)

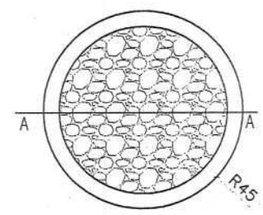

PLAN OF SOAK PIT

Note:

Soak pit depth is related to underground water table and should be environmentally protected, meantime special attention is required for slope of pipes

DETAIL-B

Note:

All dimensions are in cm .

MINISTRY OF EDUCATION DEPARTMENT OF CONSTRUCTION	STANDARD SCHOOL DESIGN IN AFGHANISTAN	ARCHITECT/DESIGN	AH.MAIWAND M.W	APPROVED:Doc/Mod	ENG.AB.MOMIN,RAAD	TYPE	ARCHITECTURE	PROJECT NAME	5-LATRINE FROM BUNT BRICK I BEAM ROOF.
		CHECKED BY	ENG.S.RASOOL AFGHANI	SCALE	AS SHOWN (A3)	CODE / SHEET No	3/6	DRAWING TITLE	DETAIL.
		TECH- APPROVED BY	ENG.AB.MATIN MAQOL	DATE	3.23.2014	Latrine-010			

PRODUCED BY AN AUTODESK EDUCATIONAL PRODUCT
PRODUCED BY AN AUTODESK EDUCATIONAL PRODUCT
PRODUCED BY AN AUTODESK EDUCATIONAL PRODUCT

PRODUCED BY AN AUTODESK EDUCATIONAL PRODUCT

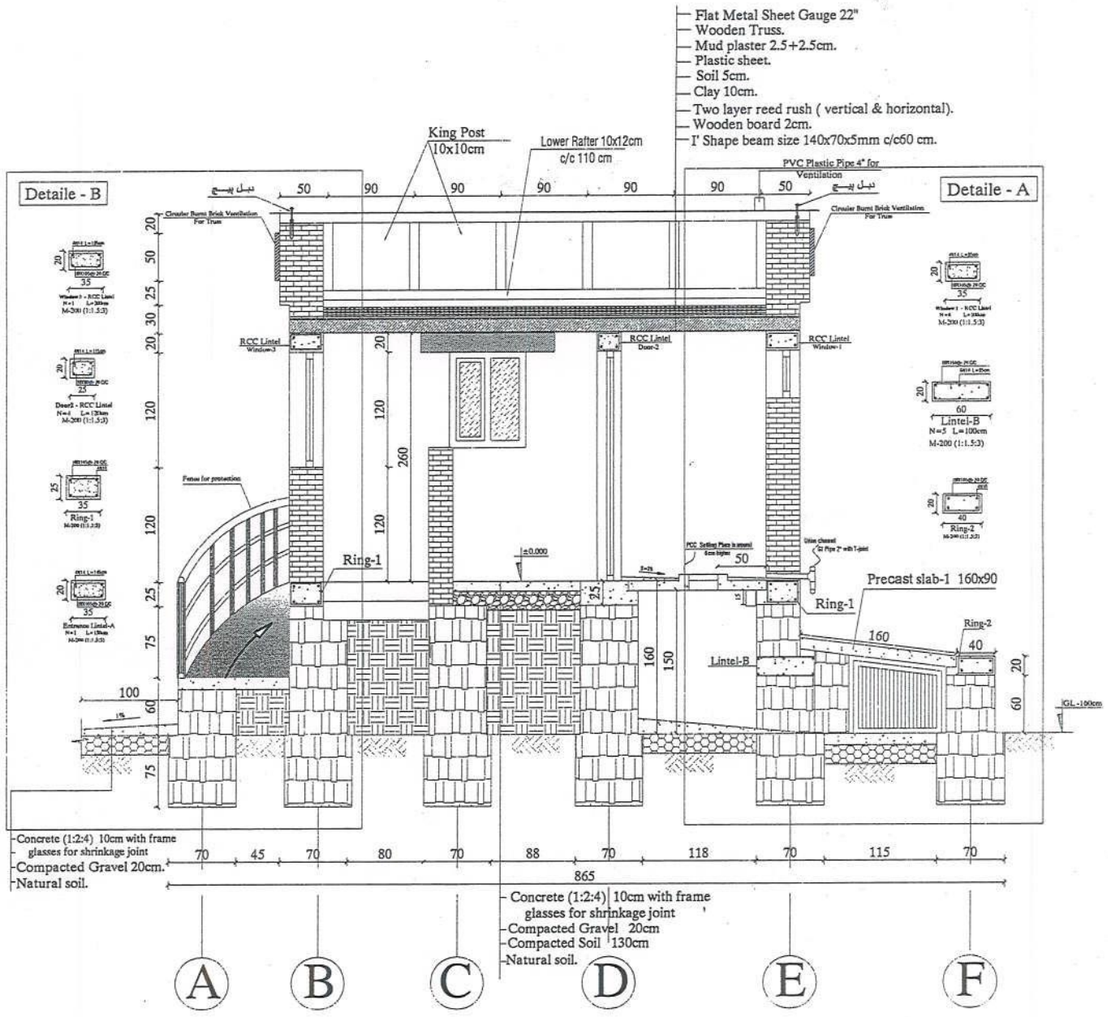

Note:
All dimensions are in cm .

SECTION B-B

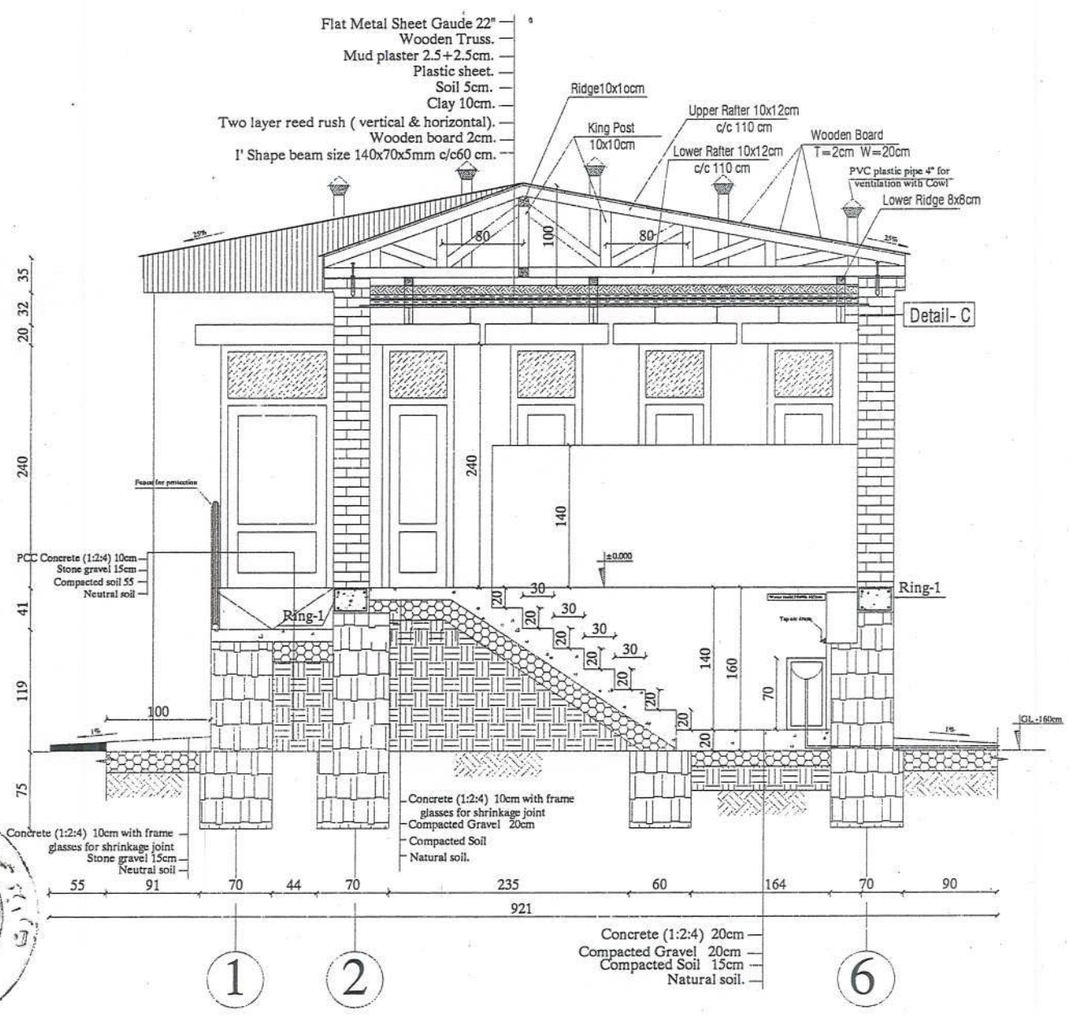

Note:
All dimensions are in cm .

SECTION A-A

MINISTRY OF EDUCATION DEPARTMENT OF CONSTRUCTION	STANDARD SCHOOL DESIGN IN AFGHANISTAN	ARCHITECT/DESIGN	AH.MAWAND .M.W	APPROVED:Doc/Mon	ENG.AB.MOMIN.RAAD	TYPE	ARCHITECTURE	PROJECT NAME	5-LATRINE FROM BUNT BRICK I BEAM ROOF.
		CHECKED BY	ENG.S.RASOOL AFGHANI	SCALE	AS SHOWN (A3)	CODE / SHEET No	2/8	DRAWING TITLE	SECTIONS.
		TECH- APPROVED BY	ENG.AB.MATIN MAQOL	DATE	3.23.2014	Latrine- 010			

PRODUCED BY AN AUTODESK EDUCATIONAL PRODUCT
PRODUCED BY AN AUTODESK EDUCATIONAL PRODUCT
PRODUCED BY AN AUTODESK EDUCATIONAL PRODUCT

PRODUCED BY AN AUTODESK EDUCATIONAL PRODUCT

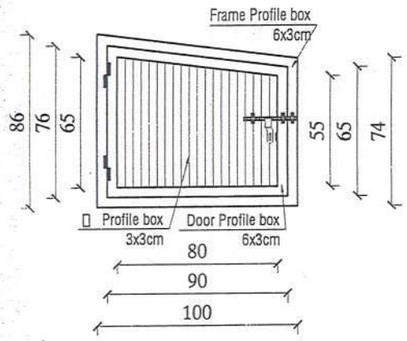

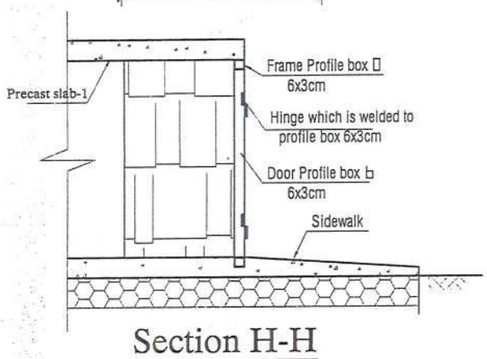

Section H-H

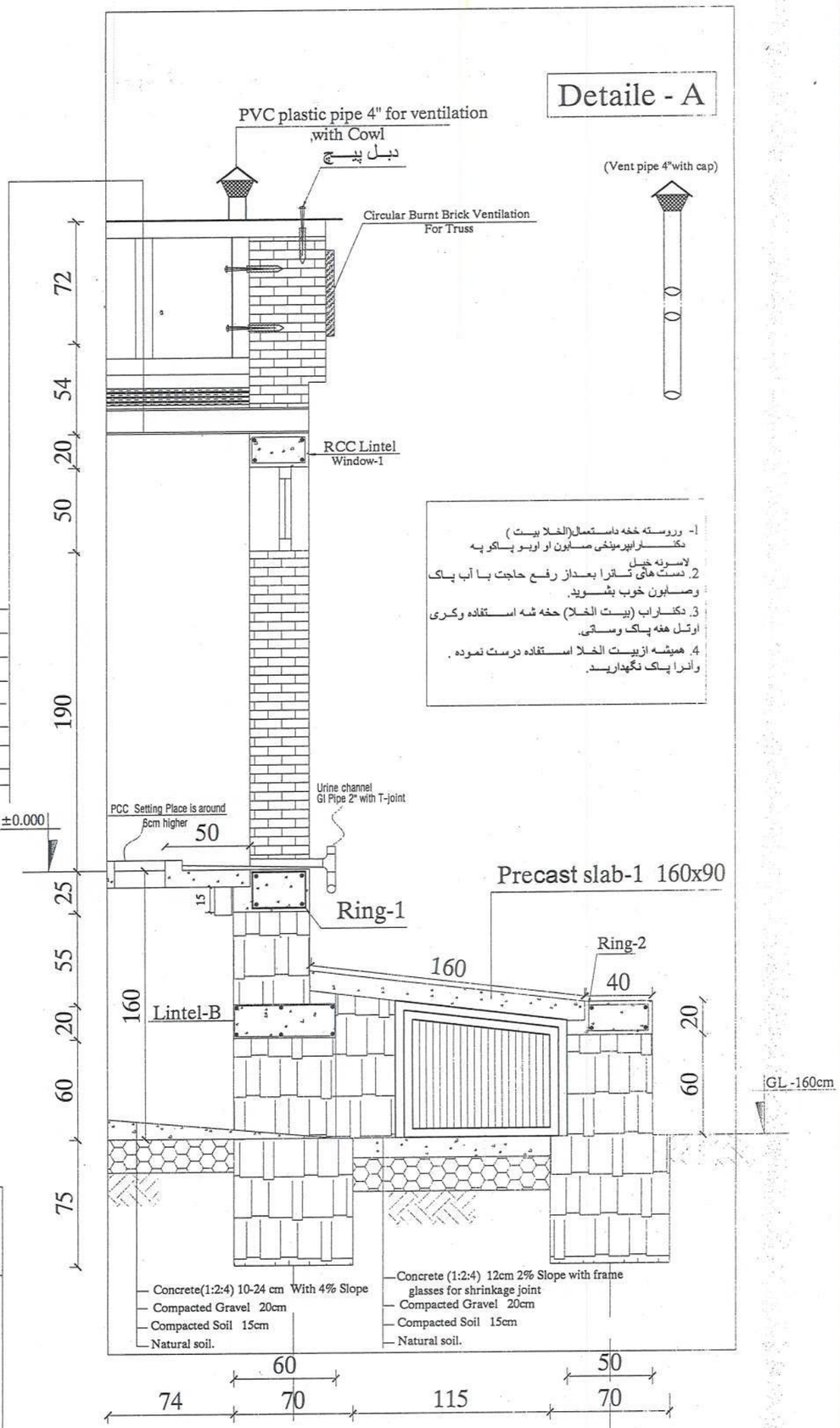

۱- وروسته خخه داستعمال(الخلا بیت)
دکنـــــاراپرمینخی صـــابون او اوبـو بـــاکو په
لاسونه خپل
2. دست های تـــاترا بعـداز رفـع حاجت بـا آب پـاک
وصـــابون خوب بشـــوید.
3. دکنـــاراب (بیـــت الخـلا) حخه شه اســـتفاده وکـری
اوتـل هغه پـاک وســـاتی.
4. همیشـه ازبیـــت الخـلا اســـتفاده درست نموده .
وآنـرا پـاک نگهداریـــد.

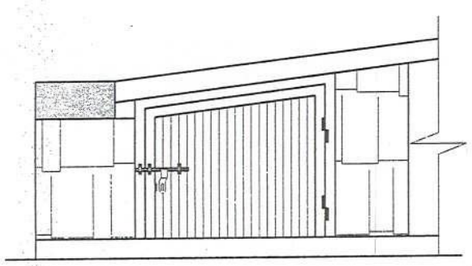

View

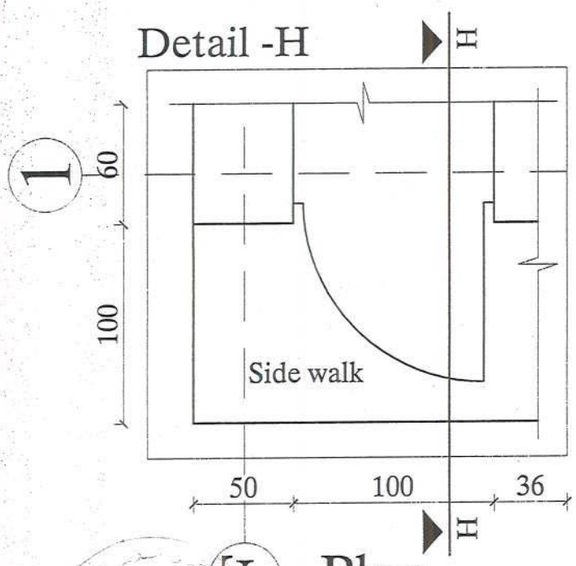

Plan

DETAIL-A

Note:
All dimensions are in cm .

MINISTRY OF EDUCATION DEPARTMENT OF CONSTRUCTION	STANDARD SCHOOL DESIGN IN AFGHANISTAN	ARCHITECT/DESIGN	AH.MAWAND .M.W	APPROVED.Doc/Mon	ENG.AB.MOMIN.RAAD	TYPE	ARCHITECTURE	PROJECT NAME	5-LATRINE FROM BUNT BRICK I BEAM ROOF.
		CHECKED BY	ENG.S.RASOOL AFGHAN	SCALE	AS SHOWN (A3)	CODE	SHEET No 4/8	DRAWING TITLE	DETAILS.
		TECH- APPROVED BY	ENG.AB.MATIN MAQOL	DATE	3.23.2014	Latrine-010			

PRODUCED BY AN AUTODESK EDUCATIONAL PRODUCT
PRODUCED BY AN AUTODESK EDUCATIONAL PRODUCT
PRODUCED BY AN AUTODESK EDUCATIONAL PRODUCT

PRODUCED BY AN AUTODESK EDUCATIONAL PRODUCT

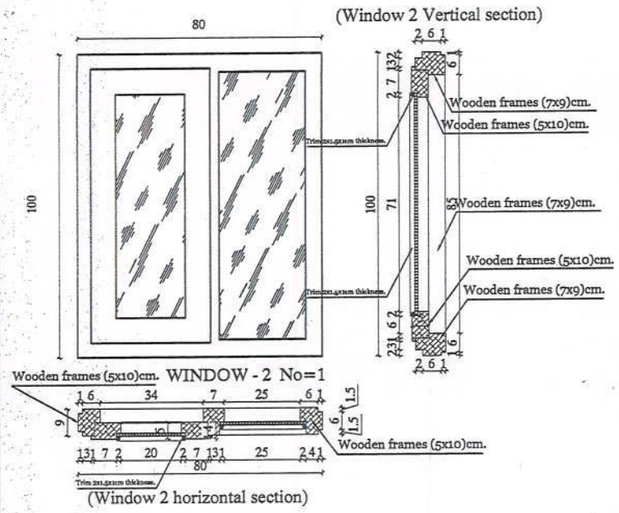

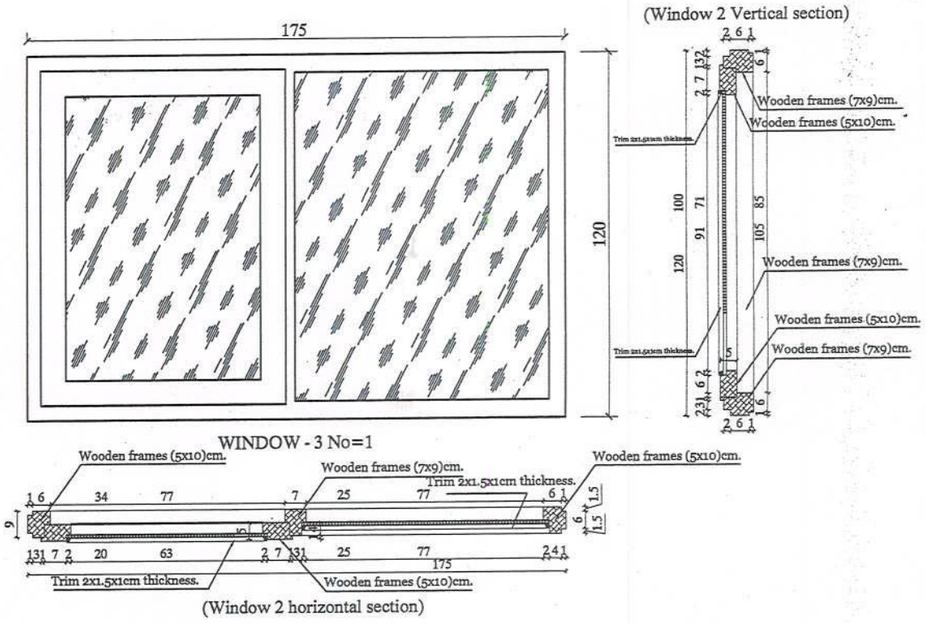

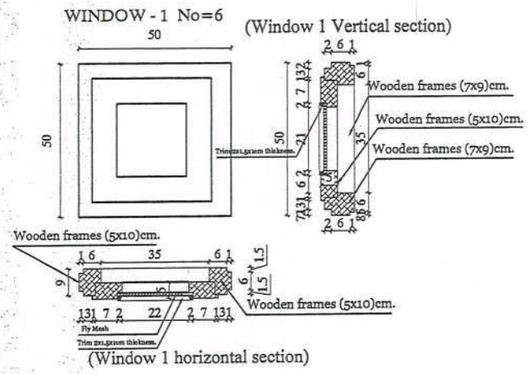

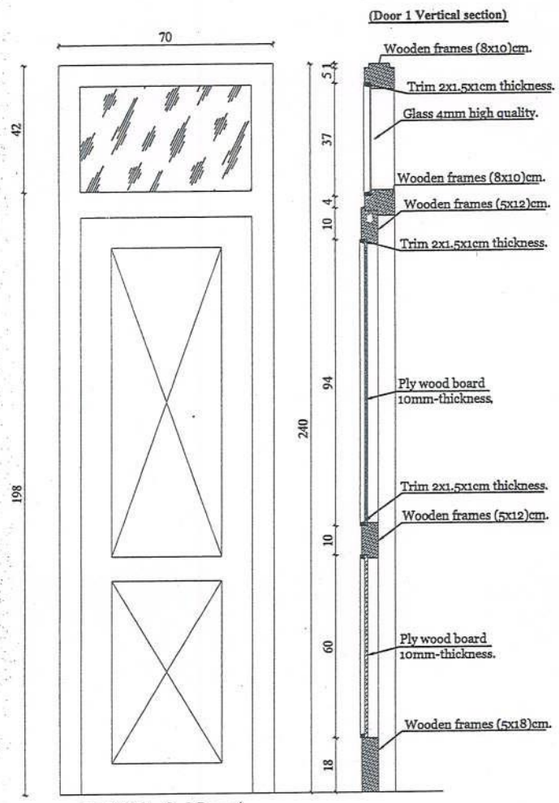

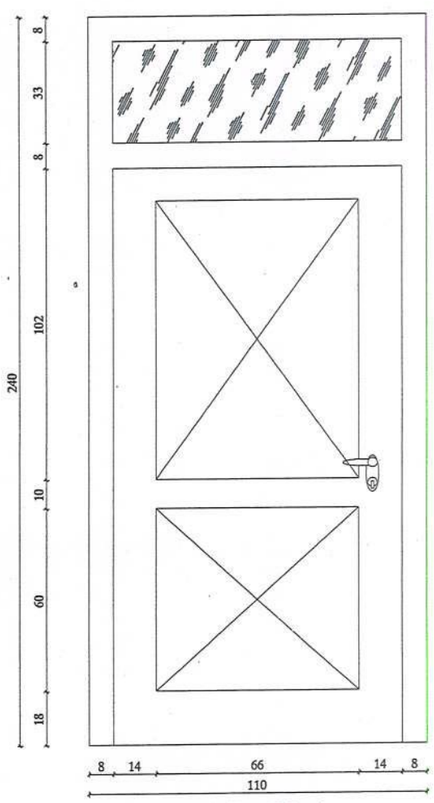

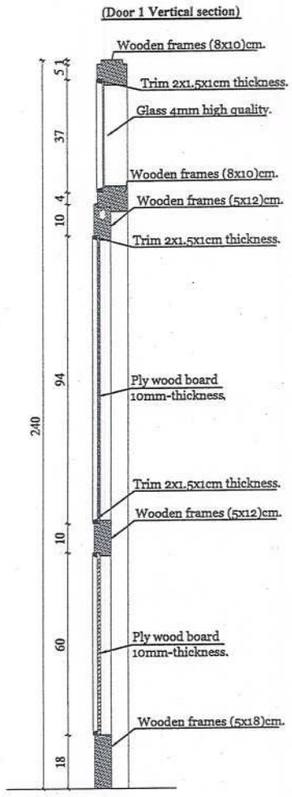

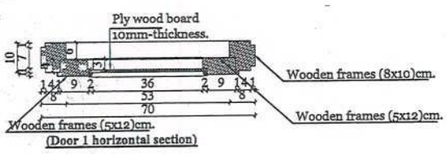

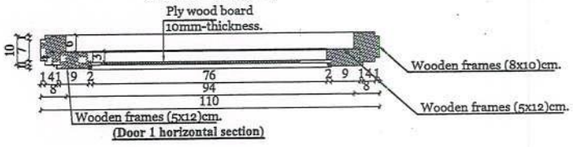

Note:
All dimensions are in cm .

MINISTRY OF EDUCATION DEPARTMENT OF CONSTRUCTION	STANDARD SCHOOL DESIGN IN AFGHANISTAN	ARCHITECT/DESIGN	AH.MAWAND .M.W	APPROVED:Doc/Mon	ENG.AB.MOMIN.RAAD	TYPE	ARCHITECTURE
		CHECKED BY	ENG.S.NASOOL AFGHANI	SCALE	AS SHOWN (A3)	CODE	SHEET No 5/8
		TECH. APPROVED BY	ENG.AB.MATIN.MADR	DATE	3-22-2014	Latrine-010	

PROJECT NAME: 5-LATRINE FROM BUNT BRICK I BEAM ROOF.
DRAWING TITLE: DOORS AND WINDOW

PRODUCED BY AN AUTODESK EDUCATIONAL PRODUCT
PRODUCED BY AN AUTODESK EDUCATIONAL PRODUCT
PRODUCED BY AN AUTODESK EDUCATIONAL PRODUCT

PRODUCED BY AN AUTODESK EDUCATIONAL PRODUCT

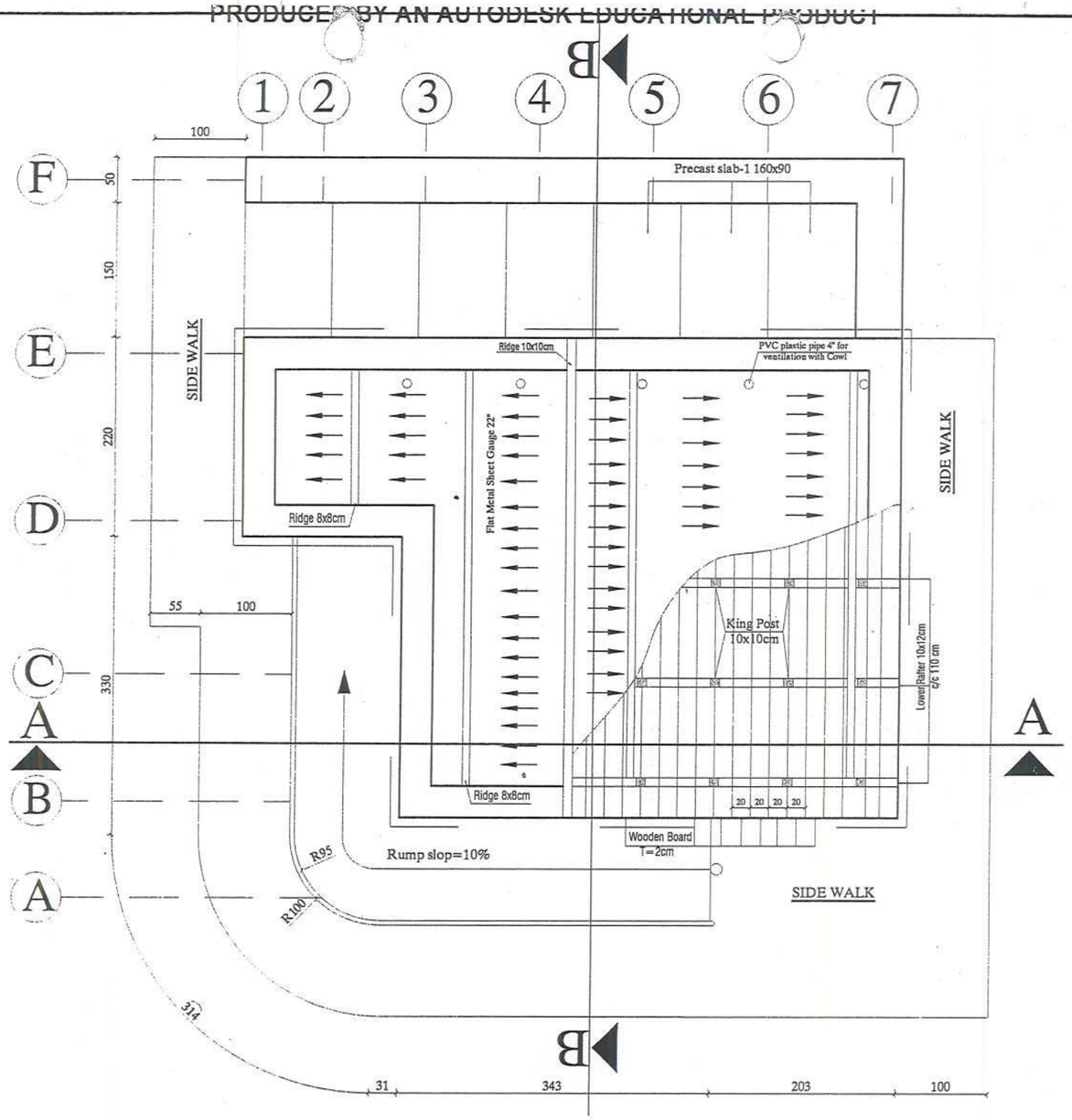

ROOF PLAN

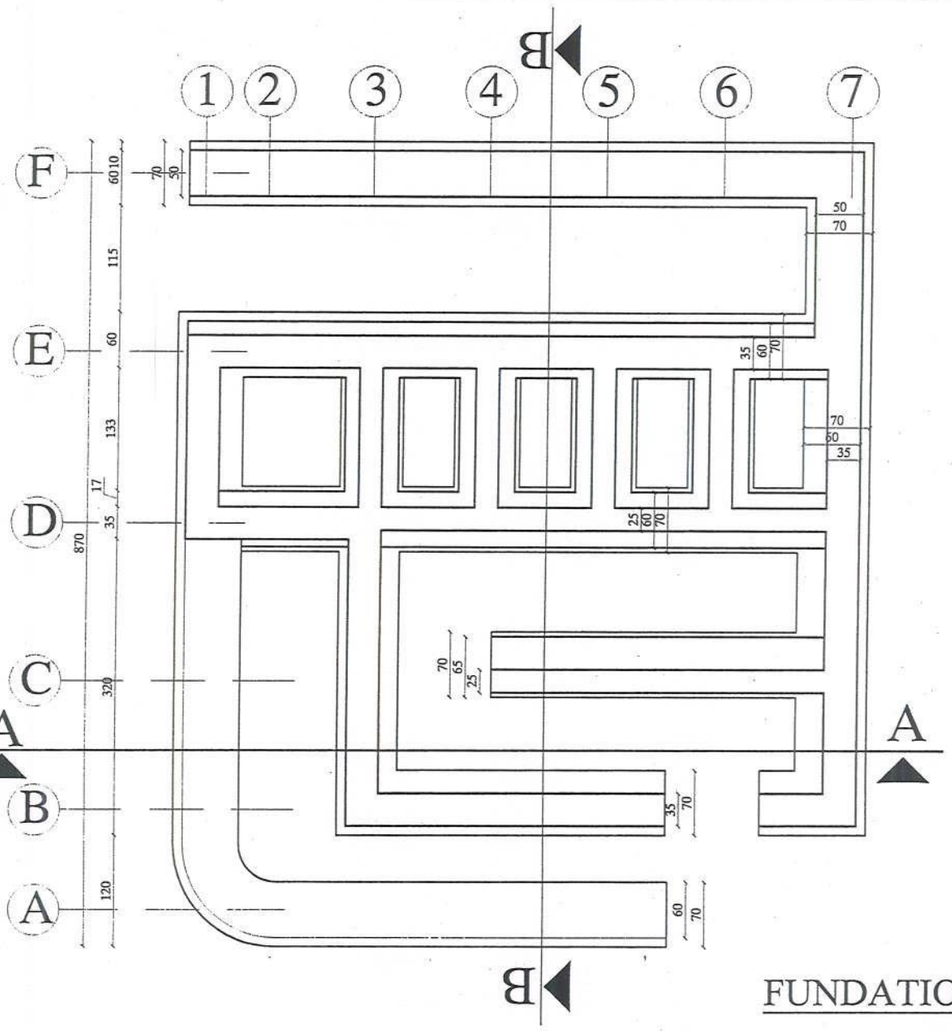

FUNDATION PLAN

Note:
All dimensions are in cm .

MINISTRY OF EDUCATION DEPARTMENT OF CONSTRUCTION	STANDARD SCHOOL DESIGN IN AFGHANISTAN	ARCHITECT/DESIGN	AH.MAWAND .M.W	APPROVED:Doc/Mod	ENG.AB.MOMIN.RAAD	TYPE	ARCHITECTURE
		CHECKED BY	ENG.S.RASOOL AFGHANI	SCALE	AS SHOWN (A3)	CODE	SHEET No 6/8
		TECH. APPROVED BY	ENG.AB.HATIM.MAQSI	DATE	1.25.2014	3-sdms-010	

PROJECT NAME: 5-LATRINE FROM BUNT BRICK I BEAM ROOF.
DRAWING TITLE: ROOF PLAN AND FUNDATION PLAN

PRODUCED BY AN AUTODESK EDUCATIONAL PRODUCT

PRODUCED BY AN AUTODESK EDUCATIONAL PRODUCT

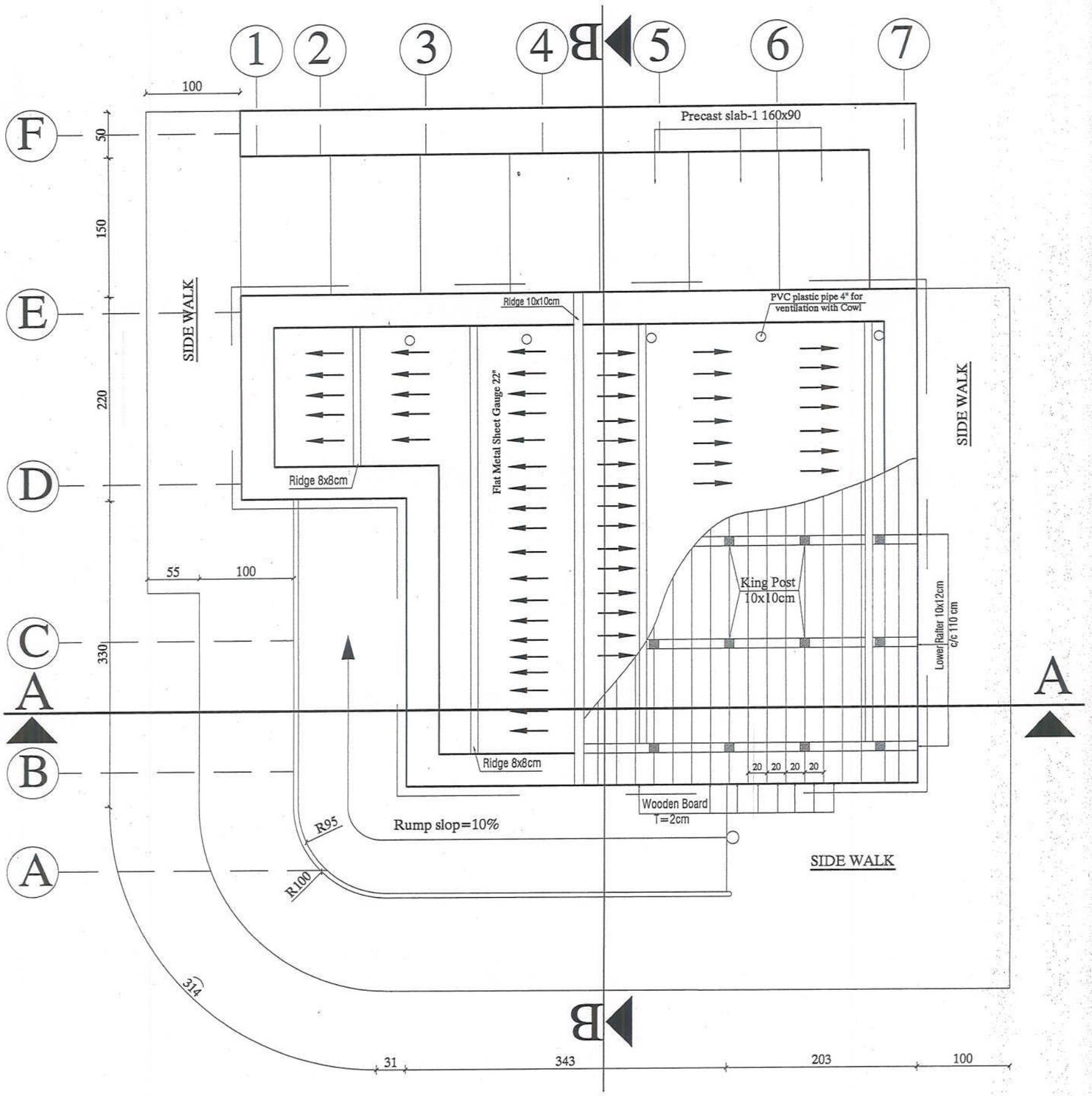

ROOF PLAN

Note:
All dimensions are in cm .

MINISTRY OF EDUCATION DEPARTMENT OF CONSTRUCTION	STANDARD SCHOOL DESIGN IN AFGHANISTAN	ARCHITECT/DESIGN	AH.MAWAND .M.W	APPROVED:Doc/Mon	ENG.AB.MOMIN.RAAD	TYPE	ARCHITECTURE
		CHECKED BY	ENG.S.RASOOL AFGHANI	SCALE	AS SHOWN (A3)	CODE	SHEET No 6/6
		TECH. APPROVED BY	ENG.AB.MATIN.MAQSI	DATE	1-22-2014	1-01-01-010	

PROJECT NAME	5-LATRINE FROM BUNT BRICK I BEAM ROOF.
DRAWING TITLE	ROOF PLAN.

PRODUCED BY AN AUTODESK EDUCATIONAL PRODUCT
PRODUCED BY AN AUTODESK EDUCATIONAL PRODUCT
PRODUCED BY AN AUTODESK EDUCATIONAL PRODUCT

PRODUCED BY AN AUTODESK EDUCATIONAL PRODUCT

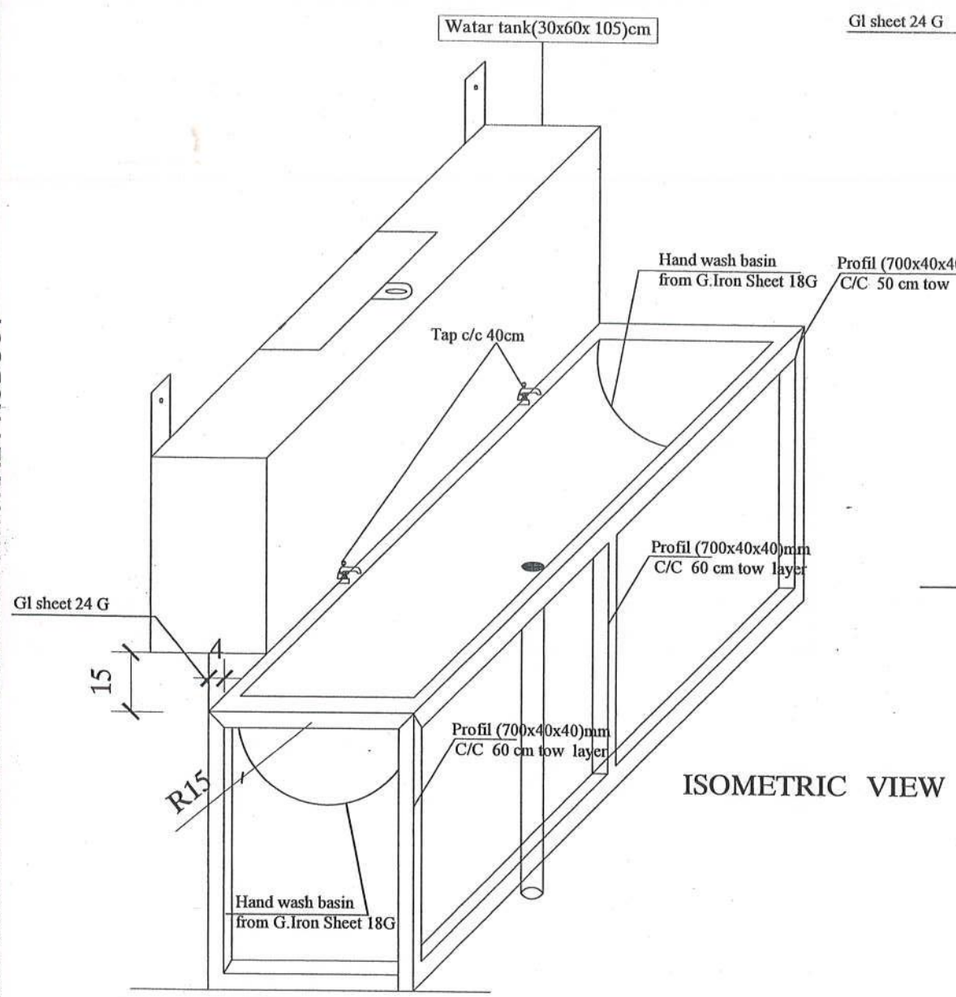

ISOMETRIC VIEW

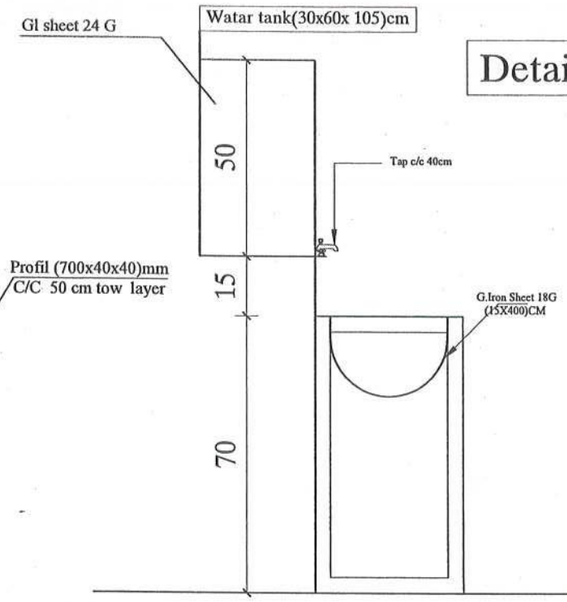

SAID ELEVATION

Detaile - D

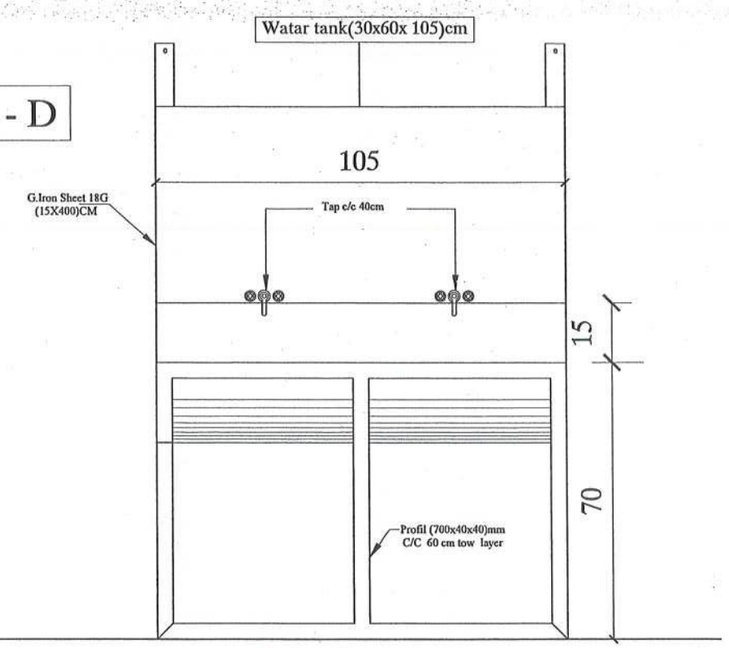

VIEW ELEVATION

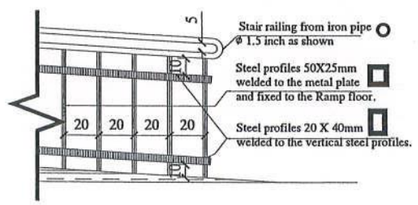

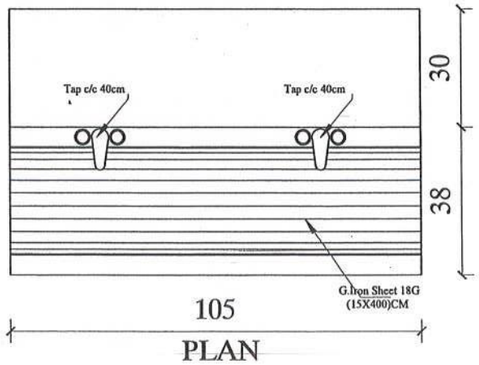

PLAN

Stair railing from iron pipe ϕ 1.5 inch as shown

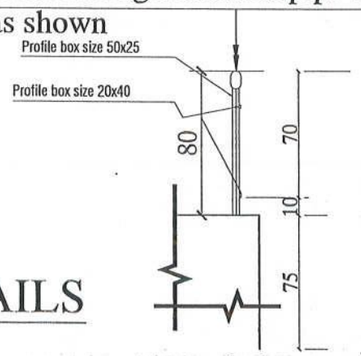

DETAILS

Note:
All dimensions are in cm .

MINISTRY OF EDUCATION DEPARTMENT OF CONSTRUCTION	STANDARD SCHOOL DESIGN IN AFGHANISTAN	ARCHITECT/DESIGN	AH.MAIWAND .M.W	APPROVED:Doc/Moe	ENG.AB.MOMIN.RAAD	TYPE	ARCHITECTURE	PROJECT NAME	5-LATRINE FROM BUNT BRICK I BEAM ROOF.
		CHECKED BY	ENG.S.RASOOL AFGHANI	SCALE	AS SHOWN (A3)	CODE / SHEET No	7/8	DRAWING TITLE	DETAILS FOR WATER TANK AND FANCE.
		TECH- APPROVED BY	ENG.AB.MATIN MAQOL	DATE	3,23,2014	Latrine-010			

PRODUCED BY AN AUTODESK EDUCATIONAL PRODUCT
PRODUCED BY AN AUTODESK EDUCATIONAL PRODUCT
PRODUCED BY AN AUTODESK EDUCATIONAL PRODUCT

PRODUCED BY AN AUTODESK EDUCATIONAL PRODUCT

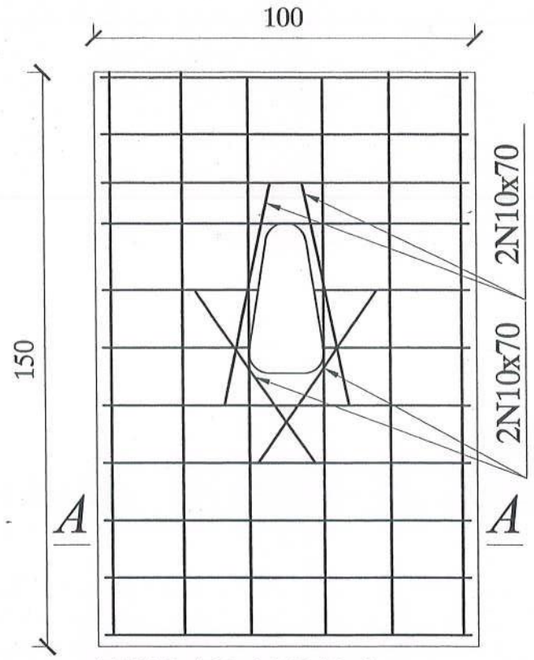

11N10x100-94@15c/c

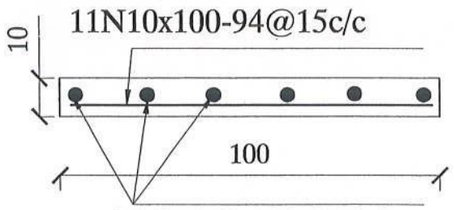

SEC A–A

Precast slab-2 150x100

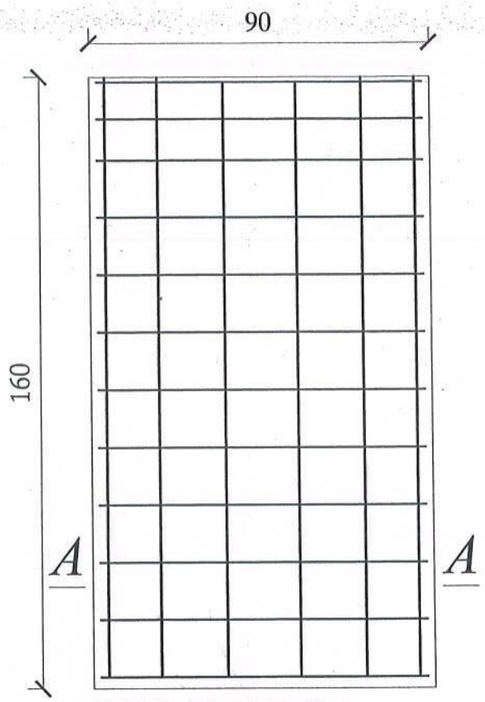

12N10x90-84@15c/c

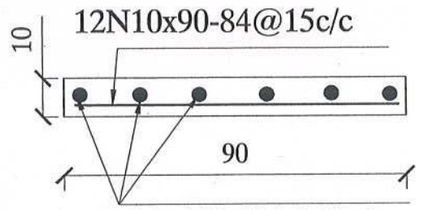

SEC A–A

Precast slab-1 160x90

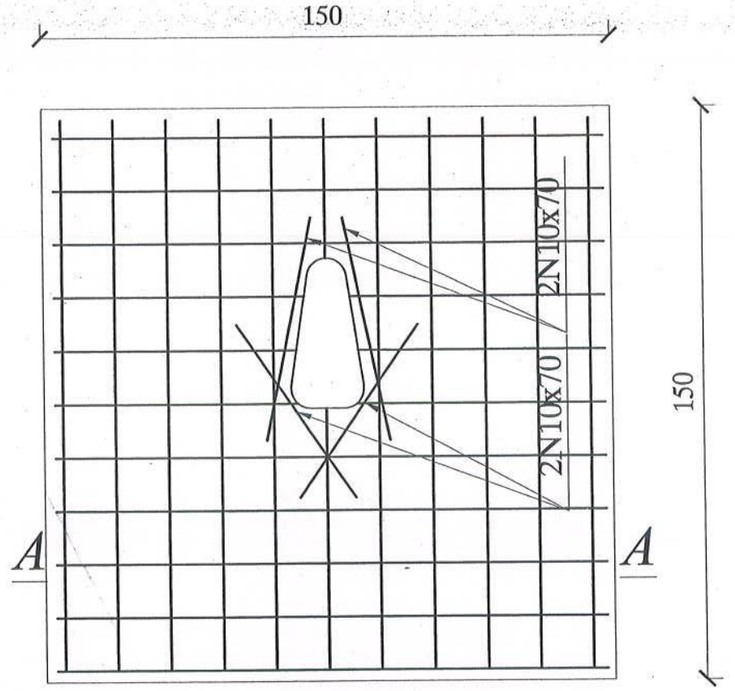

11N10x150-144@15c/c

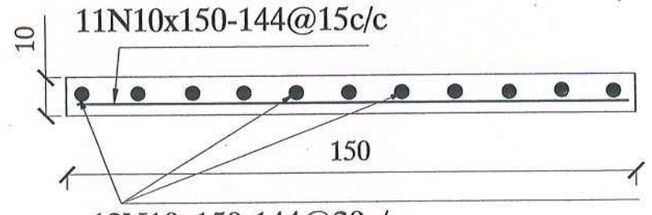

SEC A–A

Precast slab-3 150x150

DETAILS

Note:
All dimensions are in cm .

MINISTRY OF EDUCATION DEPARTMENT OF CONSTRUCTION	STANDARD SCHOOL DESIGN IN AFGHANISTAN	ARCHITECT/DESIGN	AH.MAIWAND ,M.W	APPROVED:Doc/Moe	ENG.AB.MOMIN.RAAD	TYPE	ARCHITECTURE	PROJECT NAME	5-LATRINE FROM BUNT BRICK I BEAM ROOF.
		CHECKED BY	ENG.S.RASOOL AFGHANI	SCALE	AS SHOWN (A3)	CODE / SHEET No	8/8	DRAWING TITLE	DETAILS FOR SALBS.
		TECH- APPROVED BY	ENG.AB.MATIN MAQOL	DATE	3,23,2014	Latrine-010			

PRODUCED BY AN AUTODESK EDUCATIONAL PRODUCT
PRODUCED BY AN AUTODESK EDUCATIONAL PRODUCT
PRODUCED BY AN AUTODESK EDUCATIONAL PRODUCT

Ministry of Education
Department of Construction
Archatecutre and Engineering Section
Estimation Section

Bill of Quantity garbage collection point

برآورد احجام اولیه کثافت دانی کانکریتی و پلاستیکی

S.No	Description of Work	مشخصات فعالیت	Unit	Quantity	unit cost(USD)	Total cost(USD)	Remarks
1	Prepare plastic garbage collection point bucket size (201/240)lit best quality according to the drawing with all Necessary Requirements	تهیه نمودن سطل کثافت دانی پلاستیکی با کود 201/240Lit با کیفیت عالی طبق نقشه با امورایجابی	Ea	2.00			
2	prepare and Insulation RCC well (dia=90)cm according to the drawing with all Necessary Requirements	تهیه و نصب نمودن چک کانکریتی به قطر 90 سانتی متر مطابق نقشه با امورایجابی	Ea	3.00			
3	prepare and Insulation cover of well from GI sheet 24 gage according to the drawing with all Necessary Requirements	تهیه ونصب نمودن سرپوش سر چک از آهن چادر 24 گیچ مطابق نقشه با امورایجابی	M^2	1.00			
4	prepare and Insulation sieve from steel bar 16mm according to the drawing with all Necessary Requirements	تهیه ونصب نمودن جال از سیخ گول به قطر 16 ملی متر طبق نقشه با امورایجابی	M^2	1.00			
5	prepare and Insulation steel bar 18mm under the sieve according to the drawing with all Necessary Requirements	تهیه و نصب نمودن سیخ گول به قطر 18 ملی مترزیر جال طبق نقشه با امورایجابی	M/L	4.00			
6	prepare and Insulation spaceheater pipe (dia=12cm inclding the elbow from GI sheet 24 gage according to the drawing with all Necessary Requirements	تهیه ونصب نل بخاری به قطر 0.12 مترمعه زانو خم ازآهن چادر 24 گیچ طبق نقشه باامورایجابی	M/L	1.00			
	Total	مجموعه					

9/23/2013

PRODUCED BY AN AUTODESK EDUCATIONAL PRODUCT

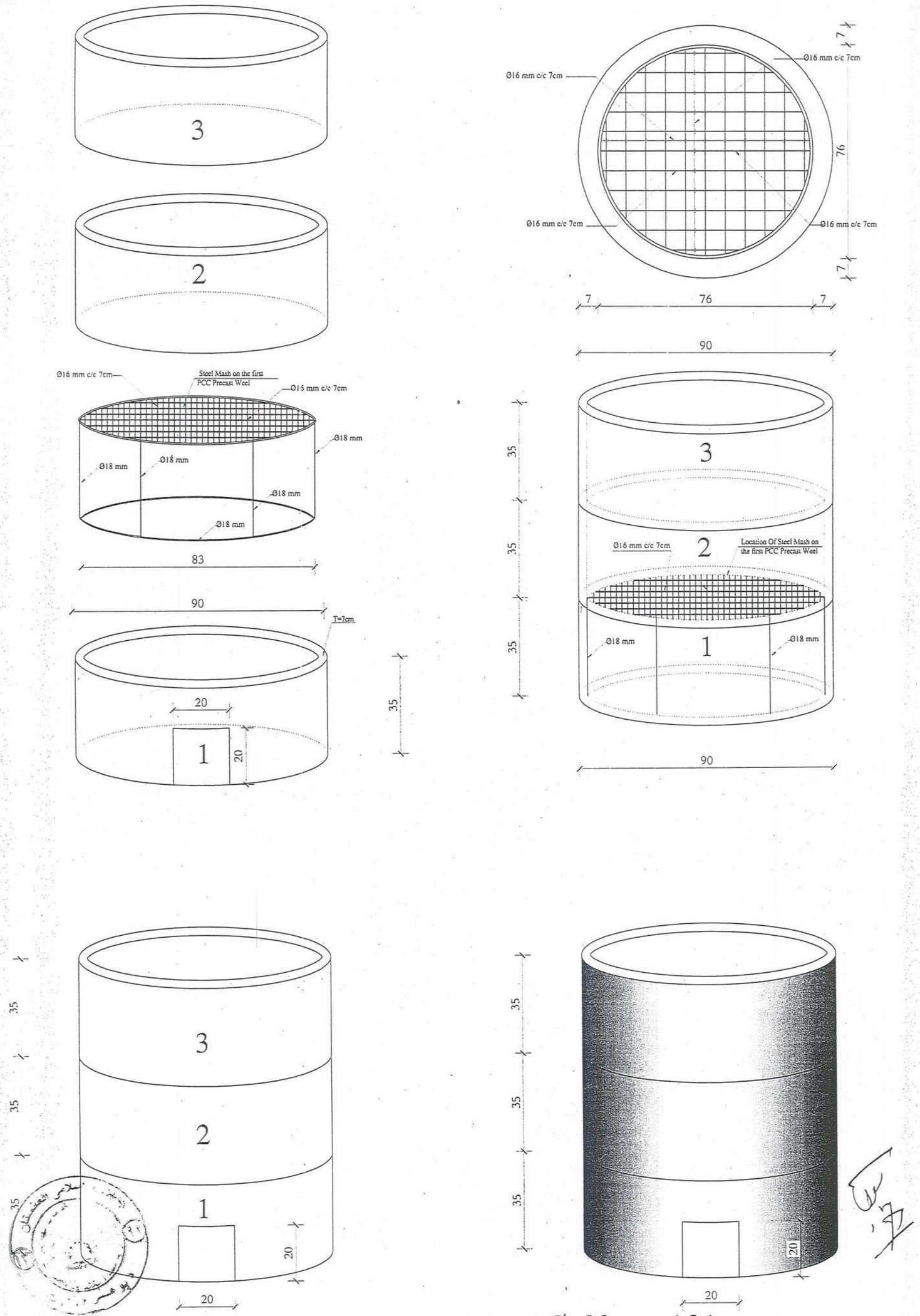

PCC Precast Garbage Ø 90 cm (2)

MINISTRY OF EDUCATION DEPARTMENT OF CONTRACTION	STANDARD SCHOOL DESIGN IN AFGHANISTAN	ARCHITECT DESIGN	ENGINEER DESIGN	ENGINEER DESIGN	ENGINEER DESIGN	TYPE	ARCHITECTURE	PROJECT NAME	PCC GARBAGE Ø 90 CM
		DRAWN BY	ARCHITECT KARIM	DATE		SHEET NO	1	DRAWING TITLE	plan& view & deatil
		TECH. APPROVED BY	ENGINEER MASOOD	DATE					

PRODUCED BY AN AUTODESK EDUCATIONAL PRODUCT
PRODUCED BY AN AUTODESK EDUCATIONAL PRODUCT
PRODUCED BY AN AUTODESK EDUCATIONAL PRODUCT

PRODUCED BY AN AUTODESK EDUCATIONAL PRODUCT

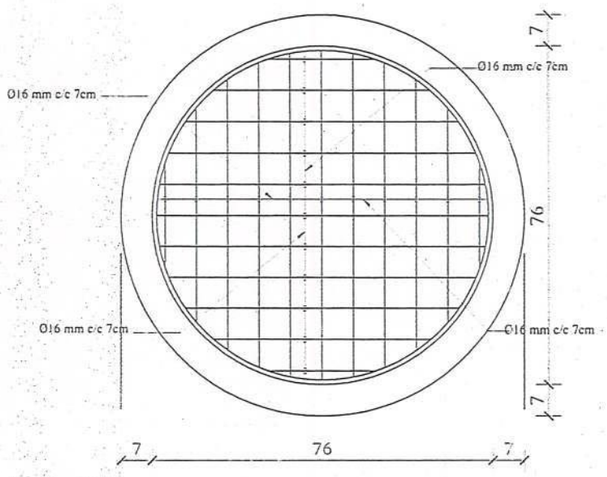

Code **201/240 Lit.**

BASKET PRICE 3000 AFGHANIS. (1)

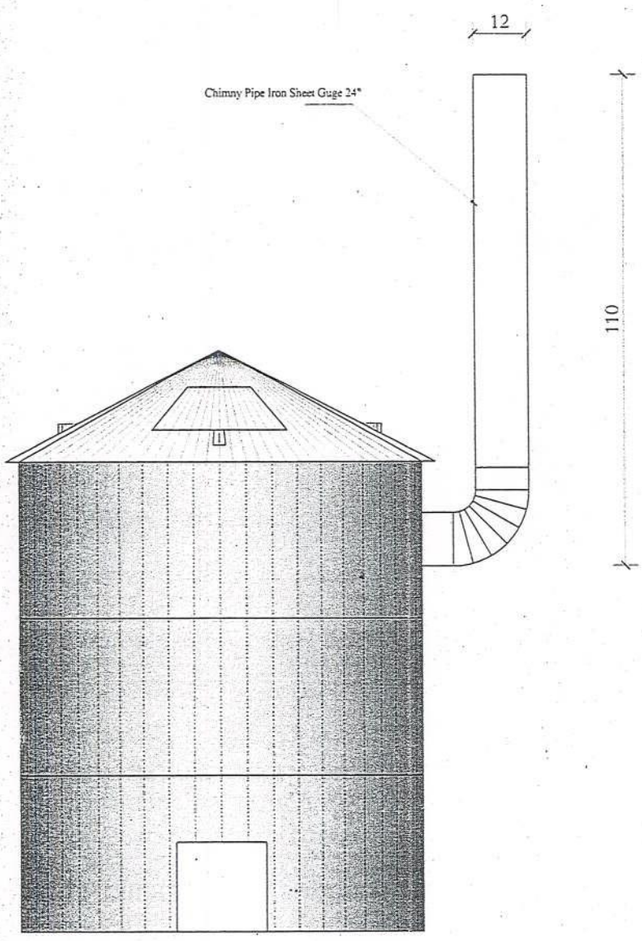

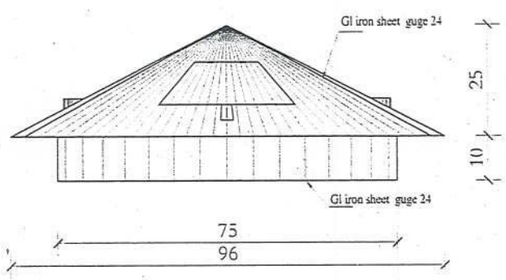

View of Iron Sheet Cover guge 24"

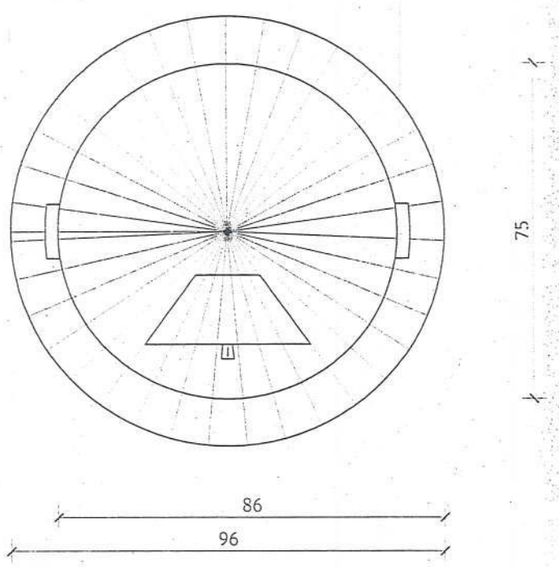

Plan of Iron Sheet Cover guge 24"

MINISTRY OF EDUCATION DEPARTMENT OF CONTRACTION	STANDARD SCHOOL DESIGN IN AFGHANISTAN	ARCHITECT DESIGN	ARCHITECT ZAKIR Z	APPROVED BY	ENG. GHULAM RAZA	TYPE	ARCHITECTURE	PROJECT NAME	PCC GARBAGE Ø 90 CM
		DESIGNED BY	ARCHAND KARIMI	SCALE		SHEET No	2/2	DRAWING TITLE	View & deatil
		TECH. APPROVED BY	ENG. GHULAM MAJID	DATE					

PRODUCED BY AN AUTODESK EDUCATIONAL PRODUCT
PRODUCED BY AN AUTODESK EDUCATIONAL PRODUCT
PRODUCED BY AN AUTODESK EDUCATIONAL PRODUCT