MINISTRY OF EDUCATION

(MOE/ISD)

DEPARTMENT OF CONSTRUCTION / TECHNICAL SERVICES

(ISD)

TYPICAL 10 LATRINE BRNUT BRICK I-BEAM

ARCHITECTURE

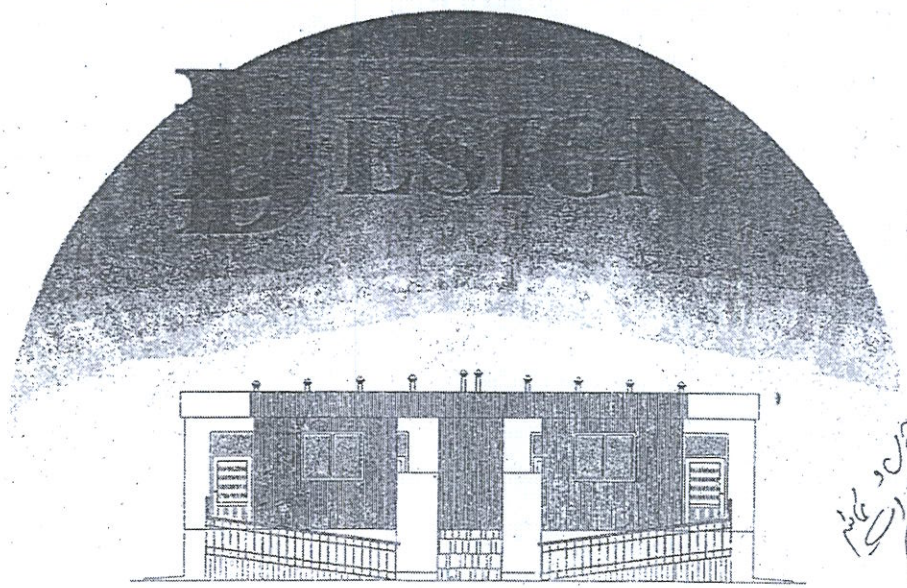

FEB 2014

PRODUCED BY AN AUTODESK EDUCATIONAL PRODUCT

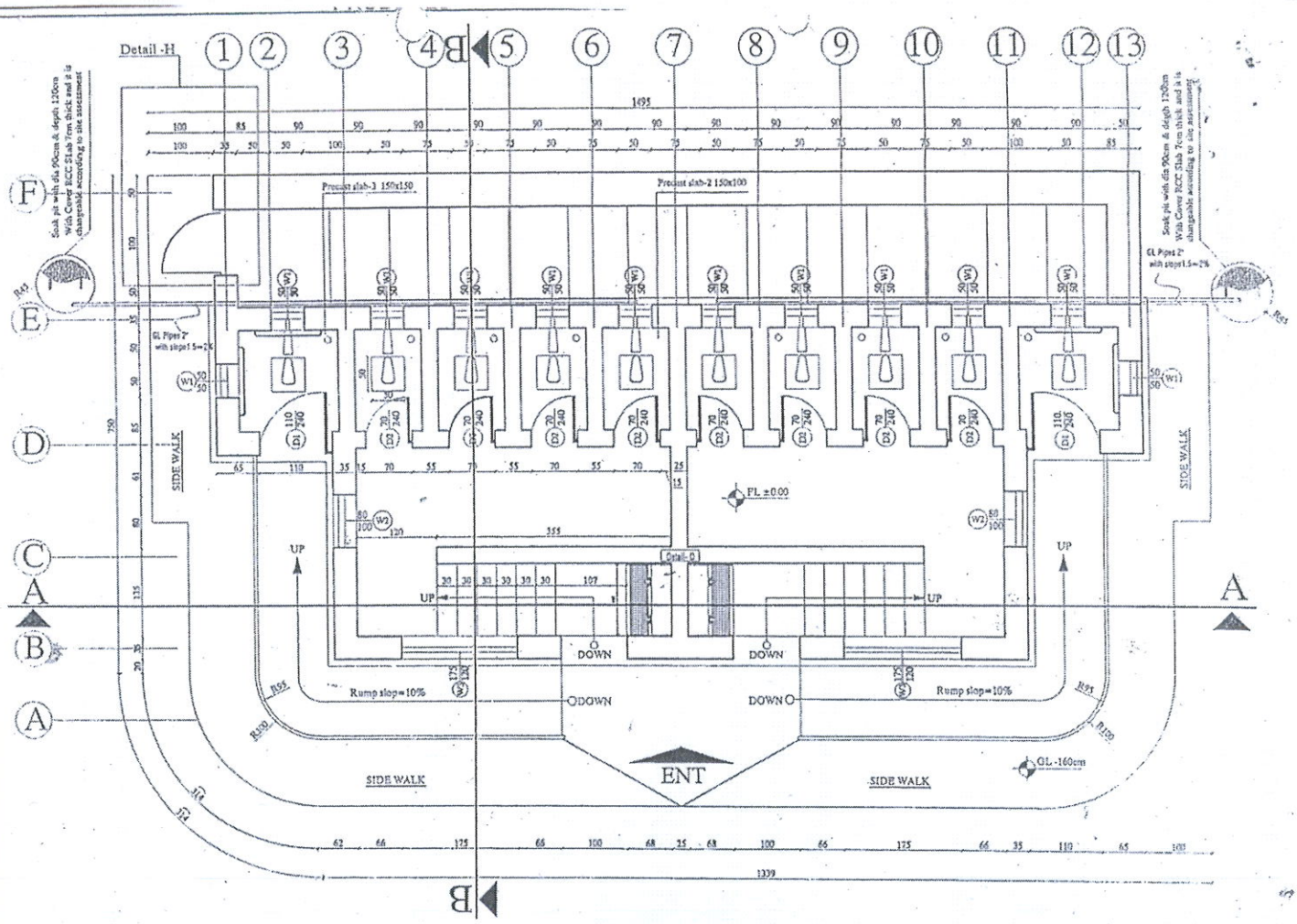

GROUND FLOOR PLAN

Note:
All dimensions are in cm .

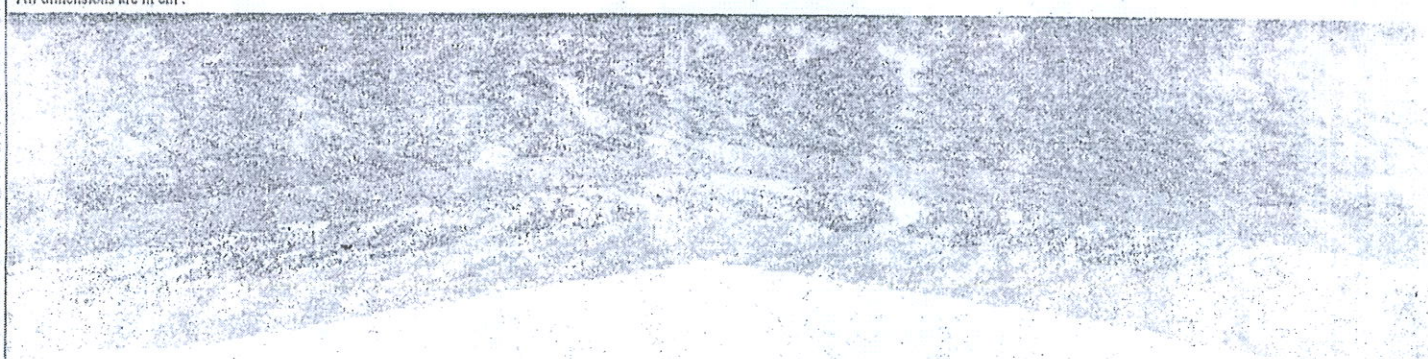

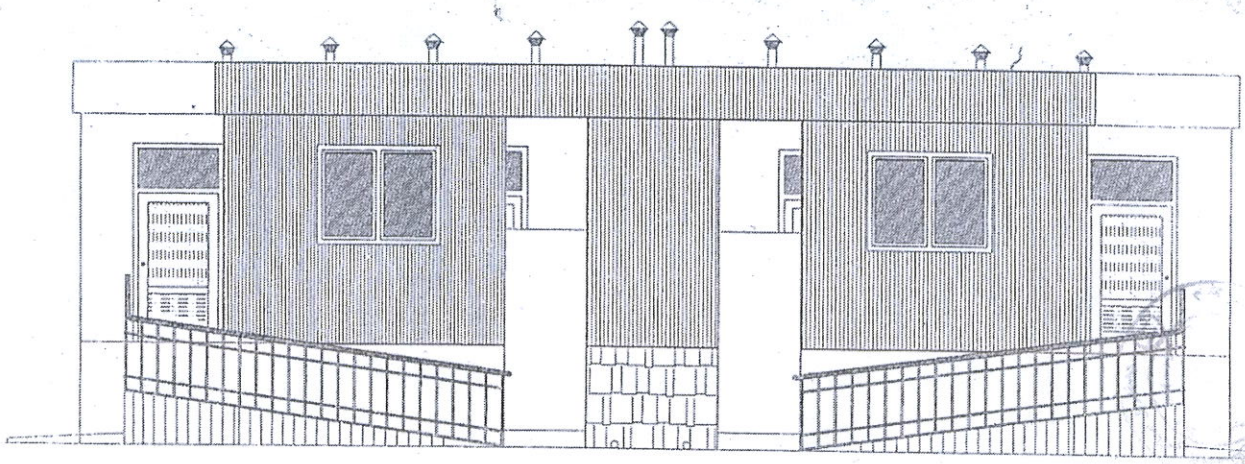

FRONT ELEVATION

Note:
All dimensions are in cm .

MINISTRY OF EDUCATION DEPARTMENT OF CONSTRUCTION	STANDARD SCHOOL DESIGN IN AFGHANISTAN	ARCHITECT DESIGN	ARC. MOHAMMAD ZIA	APPROVED BY	ENG. AB. MOMIN RAAD	TITLE	ARC. ARCHITECTURE	PROJECT NAME	10 LATRINE FROM BUNT BRICK I BEAM ROOF
		CHECKED BY	ENG. S. FAIZUL AFGHAN	SCALE	AS SHOWN (A3)	CODE		DRAWING TITLE	GROUND FLOOR PLAN & FRONT ELEVATION
		HIGH APPROVED BY	ENG. AB. MATIN HAZIQ	DATE	1.12.2014	1-Wm-012	SHEET No.		A-1

PRODUCED BY AN AUTODESK EDUCATIONAL PRODUCT

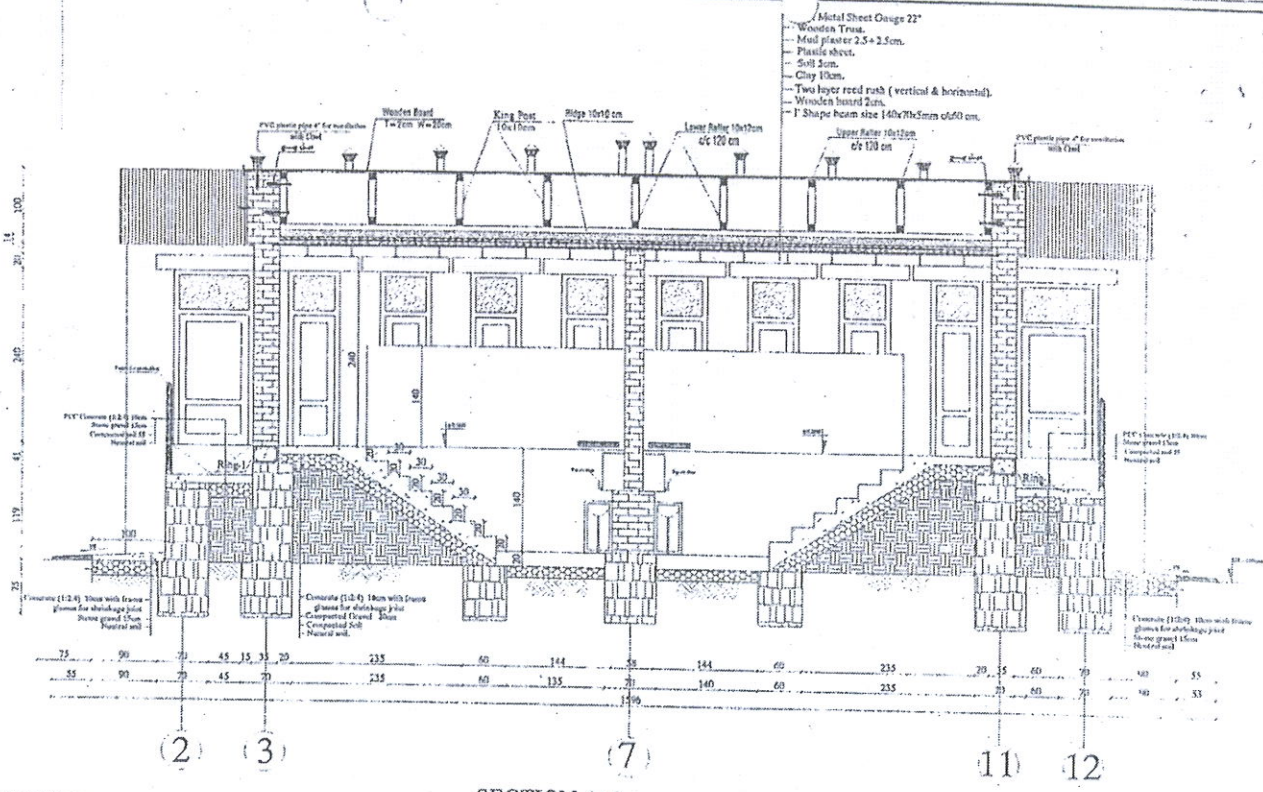

Note:
All dimensions are in cm .

SECTION A-A

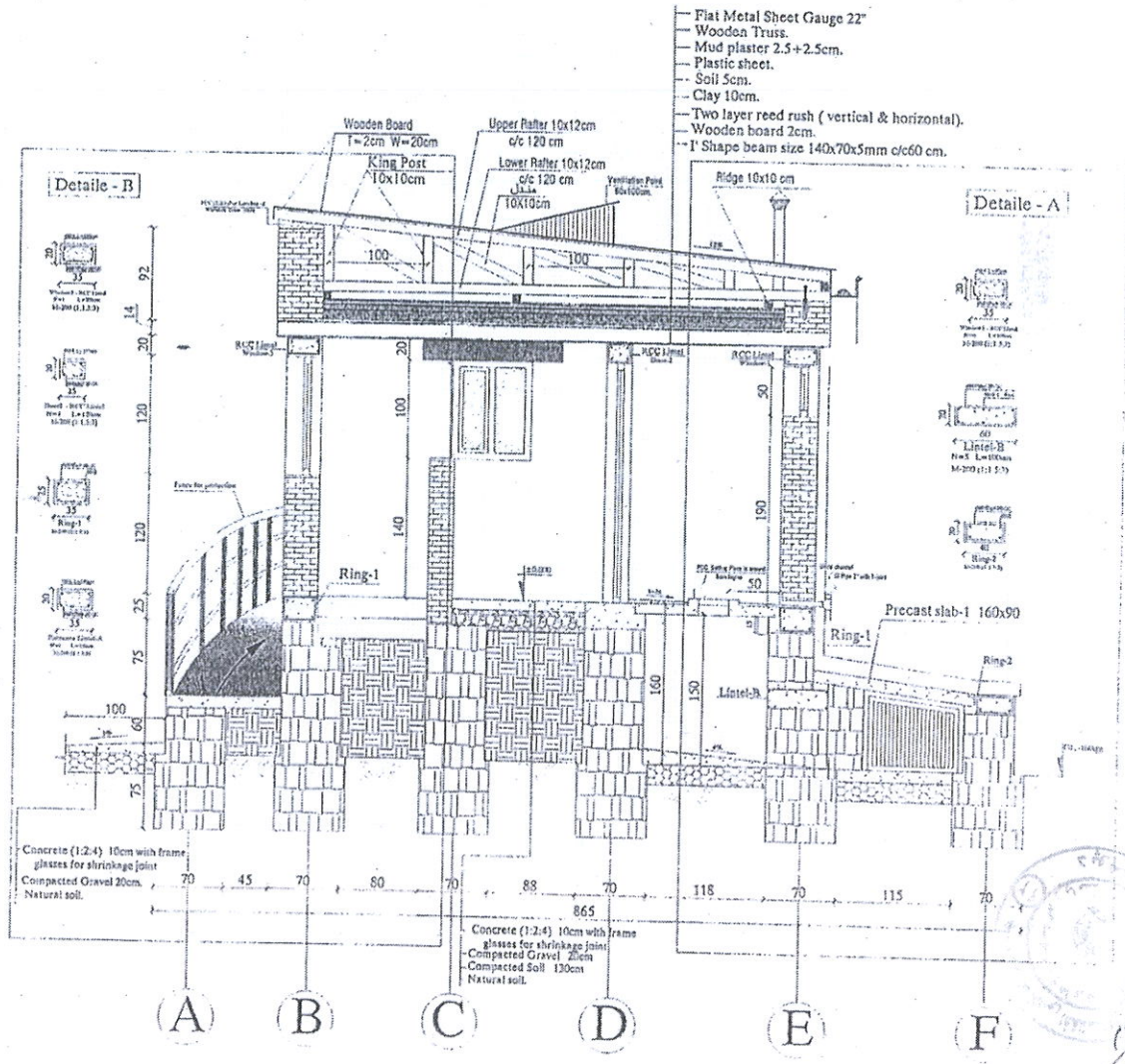

Note:
All dimensions are in cm .

SECTION B-B

MINISTRY OF EDUCATION DEPARTMENT OF CONSTRUCTION	STANDARD SCHOOL DESIGN IN AFGHANISTAN	ARCH & STRUCTURAL DESIGN: ARC. MAWANG M	APPROVED BY: ENG. AB MOMAK RAHIMI	TYPE	ARCHITECTURE	PROJECT NAME	10 LATRINE FROM BUNT BRICK I BEAM ROOF
		CHECKED BY: ENG. S RAZIYA AFGHAN	SCALE: AS SHOWN (A3)	CODE		DRAWING TITLE	SECTIONS A-A ,B-B
		TECH. APPROVED BY: ENG. AB MOMAK RAHIMI	DATE: 9.23.2014	LR File-012	SHEET NO.		

PRODUCED BY AN AUTODESK EDUCATIONAL PRODUCT
PRODUCED BY AN AUTODESK EDUCATIONAL PRODUCT

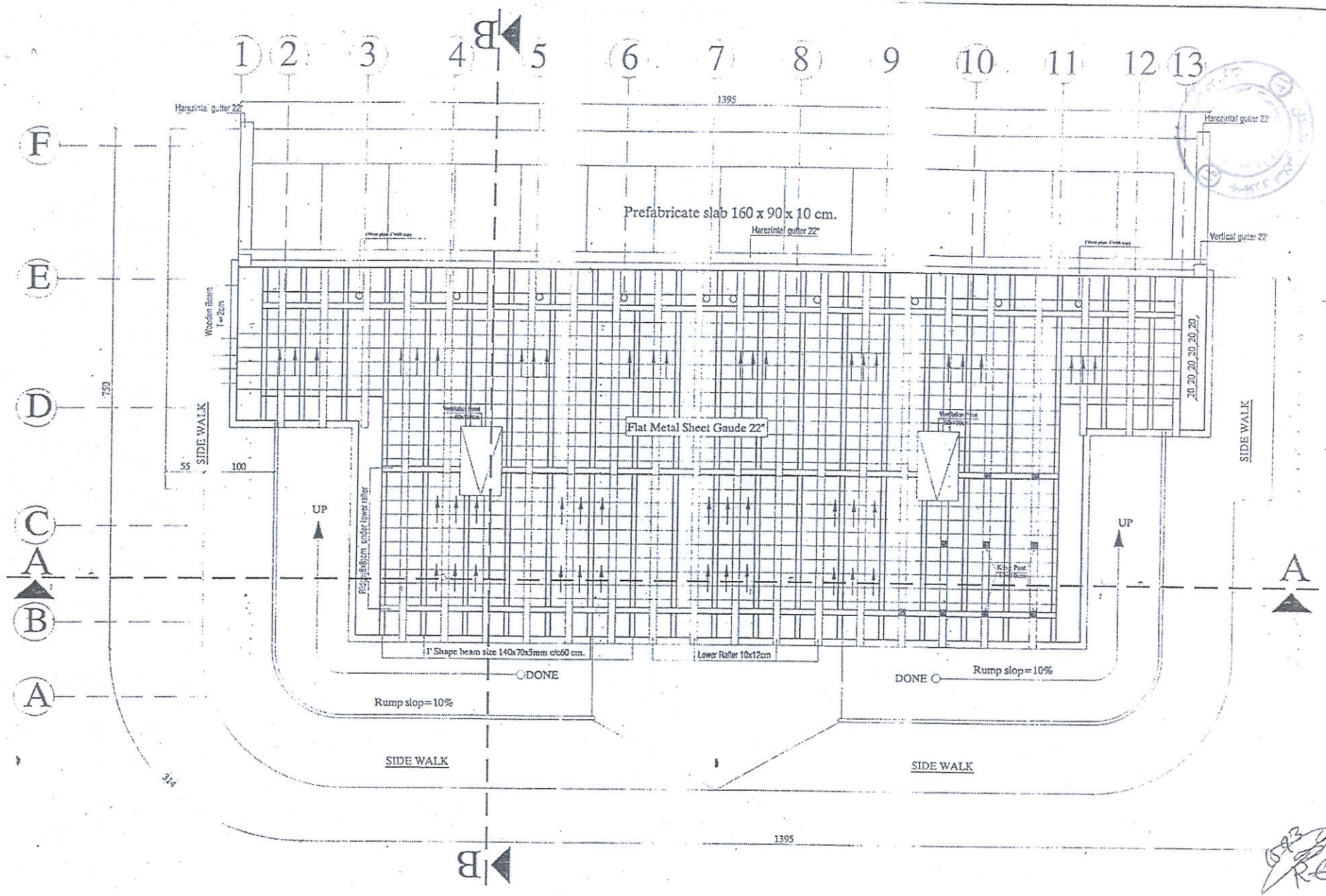

Note:
All dimensions are in cm .

ROOF PLAN

MINISTRY OF EDUCATION DEPARTMENT OF CONSTRUCTION	STANDARD SCHOOL DESIGN IN AFGHANISTAN	ARCHITECT/DESIGN	AH.MAIWAND .M	APPROVED Dir/Mgr	ENG.AB.MOMIN.RAAD	TYPE	ARCHITECTURE
		CHECKED BY	ENG.S.RASOOL AFGHANI	SCALE	AS SHOWN (A3)	CODE	SHEET No 3 / 8
		TECH- APPROVED BY	ENG.AB.MATIN MAGOL	DATE	3.23.2014		

PROJECT NAME: 10 LATRINE FROM BUNT BRICK I BEAM ROOF.

DRAWING TITLE: ROOF PLAN

PRODUCED BY AN AUTODESK EDUCATIONAL PRODUCT
PRODUCED BY AN AUTODESK EDUCATIONAL PRODUCT

PRODUCED BY AN AUTODESK EDUCATIONAL PRODUCT

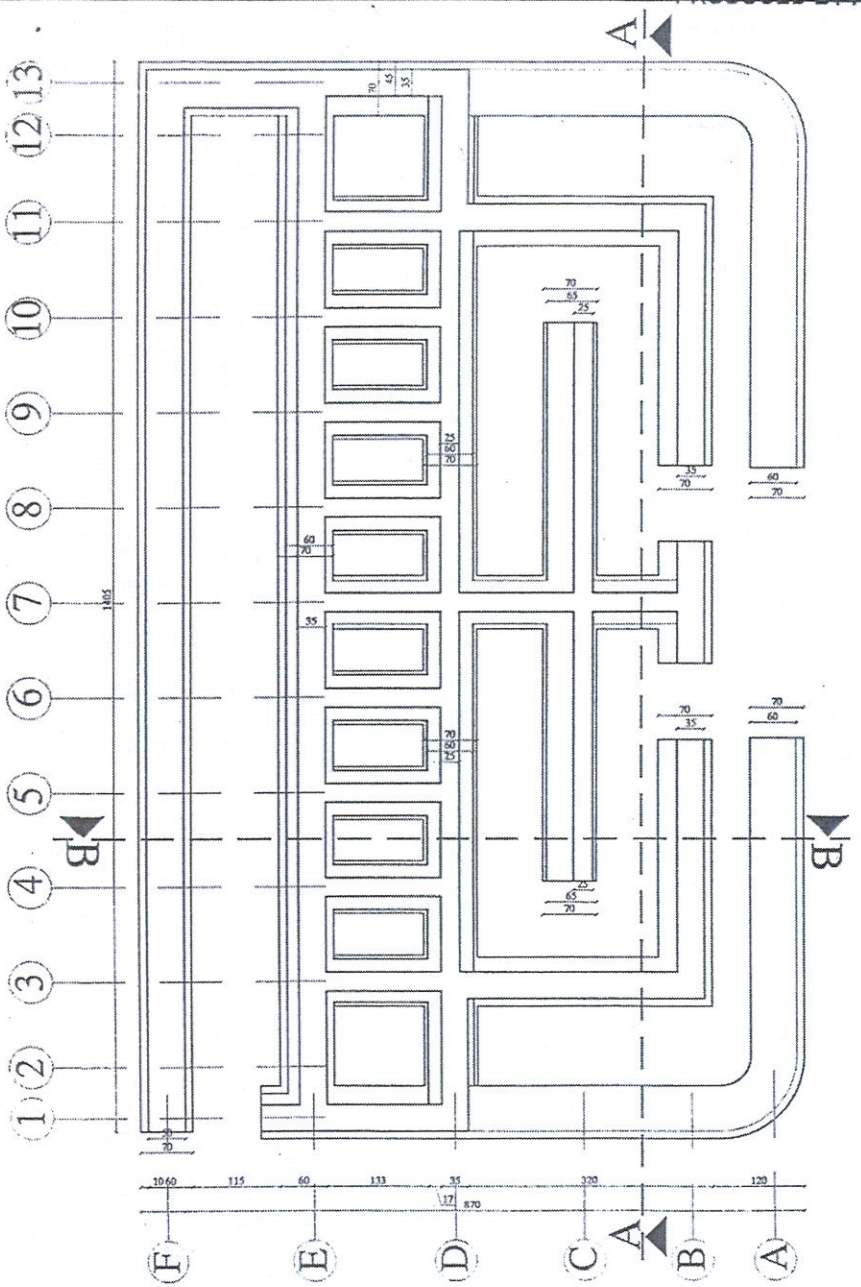

FUNDATION PLAN

Note:
All dimensions are in cm .

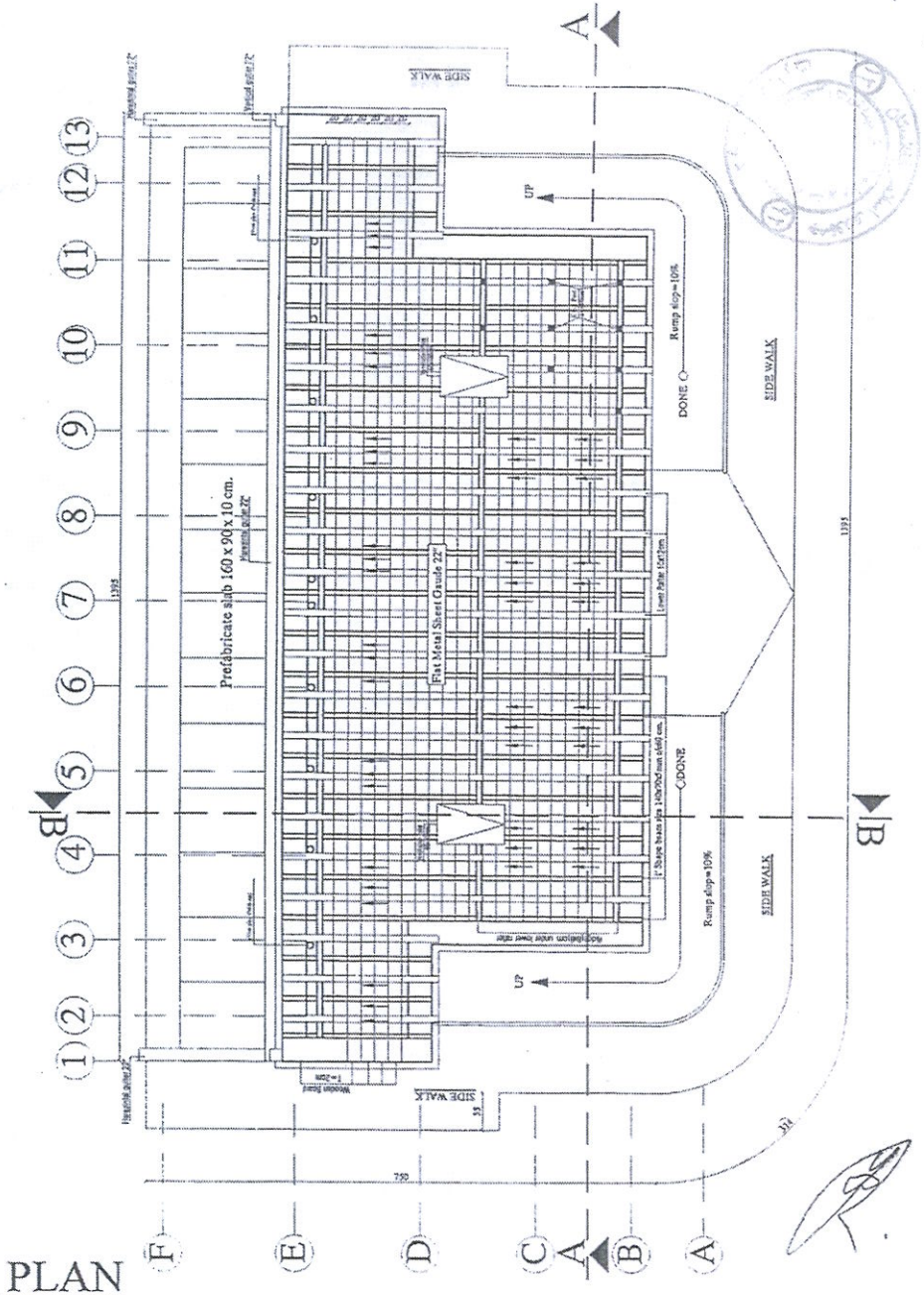

ROOF PLAN

MINISTRY OF EDUCATION DEPARTMENT OF CONSTRUCTION	STANDARD SCHOOL DESIGN IN AFGHANISTAN	ARCHITECT/DESIGN	AH.MAIWAND .M	APPROVED Doc/Mon	ENG.AB.MOMIN.RAAD	TYPE	ARCHITECTURE
		CHECKED BY	ENG S RASOOL AFGHANI	SCALE	AS SHOWN (A3)	CODE	SHEET No 3 / 8
		TECH- APPROVED BY	ENG.AB.MATIN MAGOL	DATE	2.23.2014	Latitne-	

PROJECT NAME	10 LATRINE FROM BUNT BRICK I BEAM ROOF.
DRAWING TITLE	ROOF PLAN AND FUNDATION PLAN

PRODUCED BY AN AUTODESK EDUCATIONAL PRODUCT

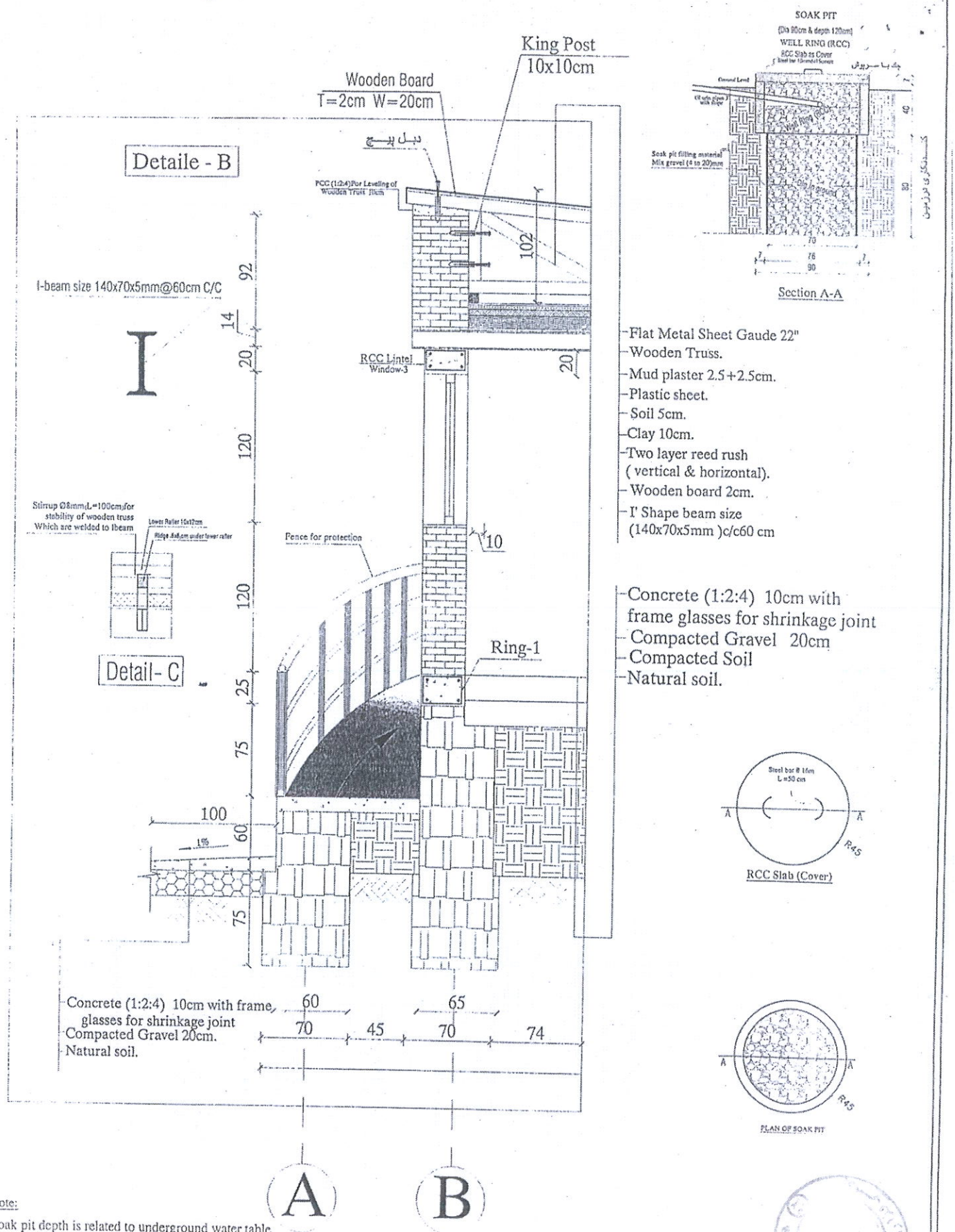

Note:

Soak pit depth is related to underground water table and should be environmentally protected, meantime special attention is required for slope of pipes

Note:
All dimensions are in cm .

DETAILS

MINISTRY OF EDUCATION DEPARTMENT OF CONSTRUCTION	STANDARD SCHOOL DESIGN IN AFGHANISTAN	ARCHITECTS DESIGN			TYPE	ARCHITECTURE	PROJECT NAME: 10 LATRINE FROM BUNT BRICK I BEAM ROOF
		CHECKED BY			CODE		DRAWING TITLE: DETAILS.
		TECH. APPROVED BY		DATE		SHEET No	

PRODUCED BY AN AUTODESK EDUCATIONAL PRODUCT
PRODUCED BY AN AUTODESK EDUCATIONAL PRODUCT

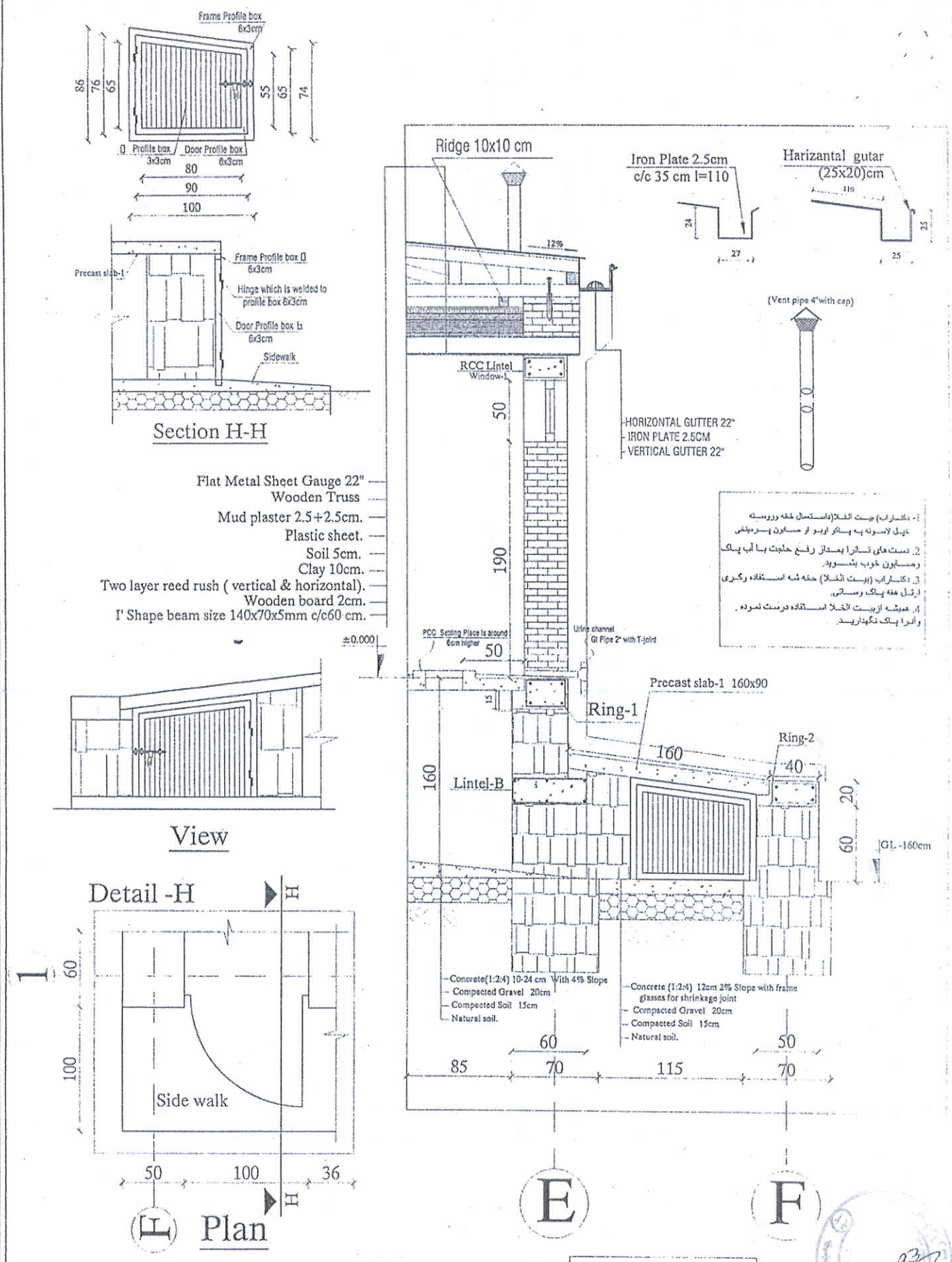

PRODUCED BY AN AUTODESK EDUCATIONAL PRODUCT

MINISTRY OF EDUCATION DEPARTMENT OF CONSTRUCTION	STANDARD SCHOOL DESIGN IN AFGHANISTAN	ARCHITECTURE DESIGN: AR MAWANG JAN	APPROVED DWG NAME: ENG AS MOMIN AMAD			ARCHITECTURE	PROJECT NAME: 10 LATRINE FROM BUNT BRICK I BEAM ROOF
		CHECKED BY: ENG. S. ARSOOL AFGHAN	SCALE: AS SHOWN (A3)				DRAWING TITLE: DETAILS
		TECH. APPROVED BY: ENG. AB MATIN SAKHI	DATE: 5.11.2014	CODE: AAHN-009	SHEET No:		

PRODUCED BY AN AUTODESK EDUCATIONAL PRODUCT

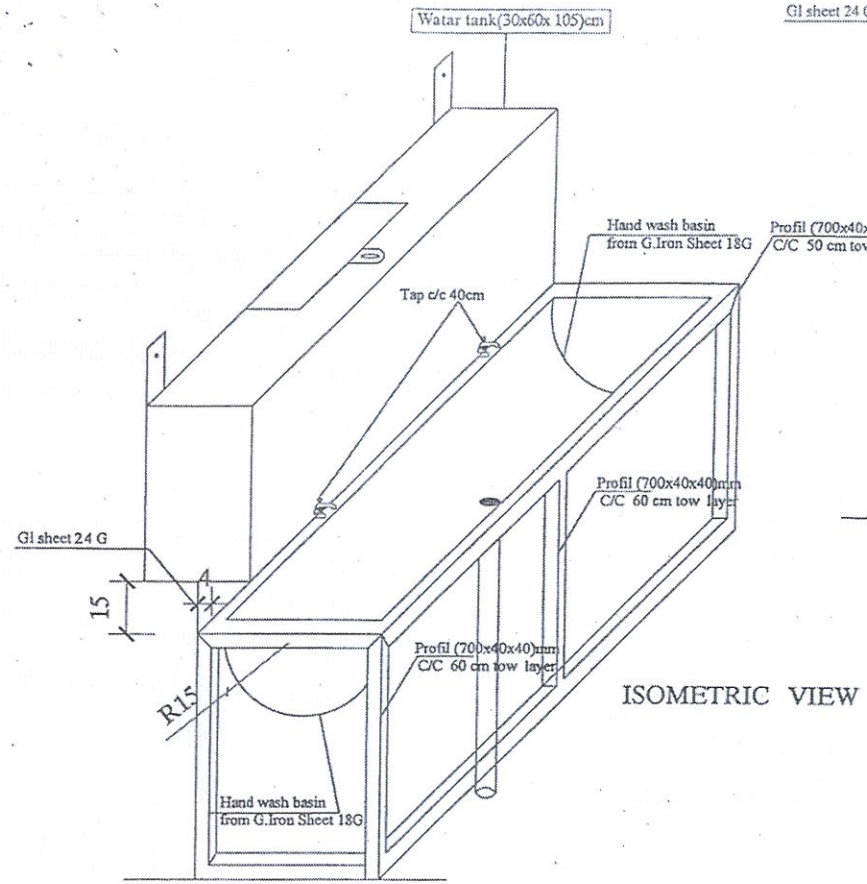

ISOMETRIC VIEW

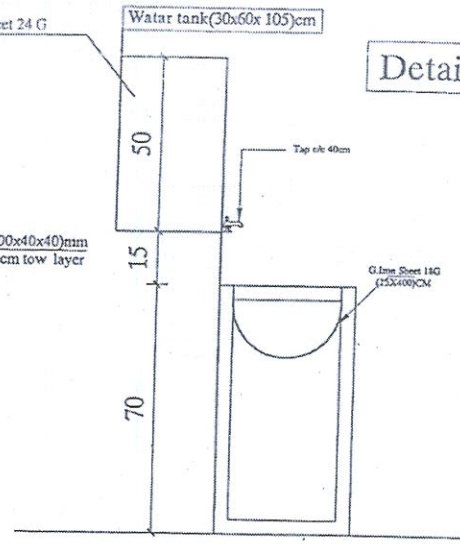

SAID ELEVATION

Detaile - D

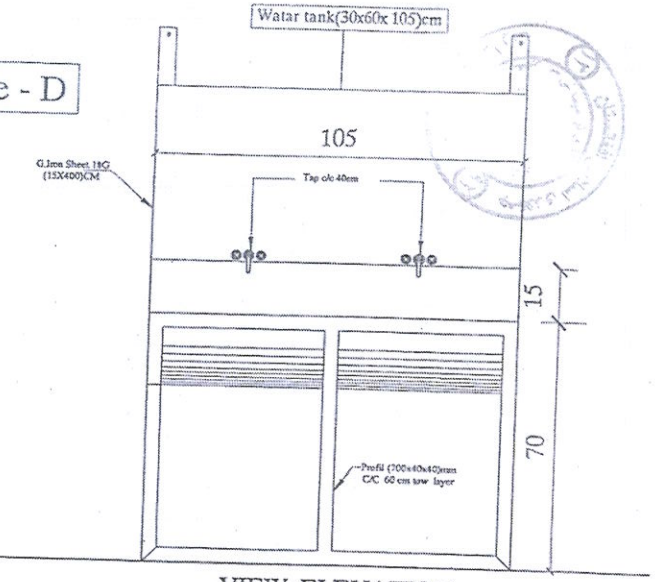

VIEW ELEVATION

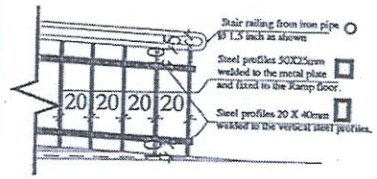

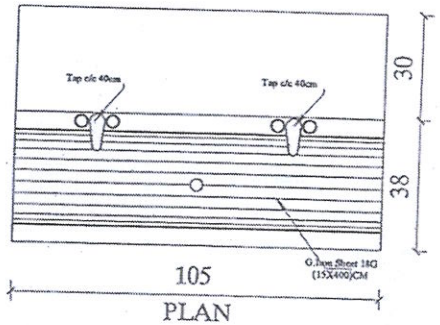

PLAN

Stair railing from iron pipe Ø 1.5 inch as shown

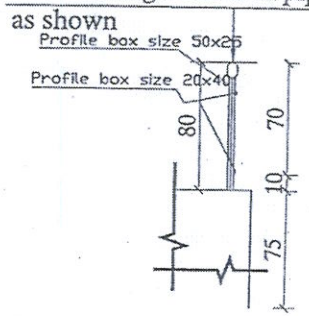

DETAILS FOR WATER TANK

MINISTRY OF EDUCATION DEPARTMENT OF CONSTRUCTION	STANDARD SCHOOL DESIGN IN AFGHANISTAN	ARCHITECT/DESIGN	AH.MAIWAND .M	APPROVED:Doc/Mon	ENG.AB.MOMIN.RAAD	TYPE	ARCHITECTURE	PROJECT NAME	10 LATRINE FROM BUNT BRICK I BEAM ROOF.
		CHECKED BY	ENG.S.RASOOL AFGHANI	SCALE	AS SHOWN (A3)	CODE	SHEET No 6/6	DRAWING TITLE	DETAILS OF WATER TANK AND FANCE
		TECH- APPROVED BY	ENG.AB.MATIN MAQOL	DATE	3,23,2014	Latrine-012			

PRODUCED BY AN AUTODESK EDUCATIONAL PRODUCT

PRODUCED BY AN AUTODESK EDUCATIONAL PRODUCT

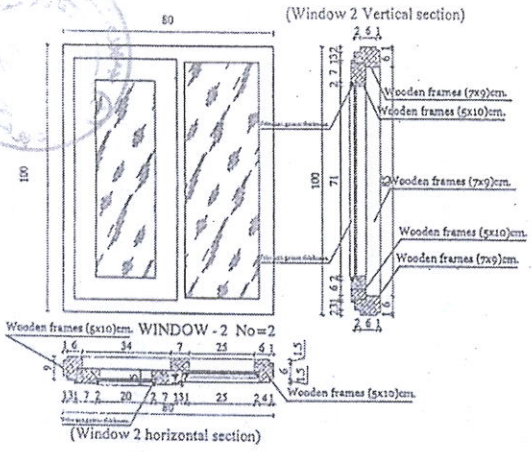

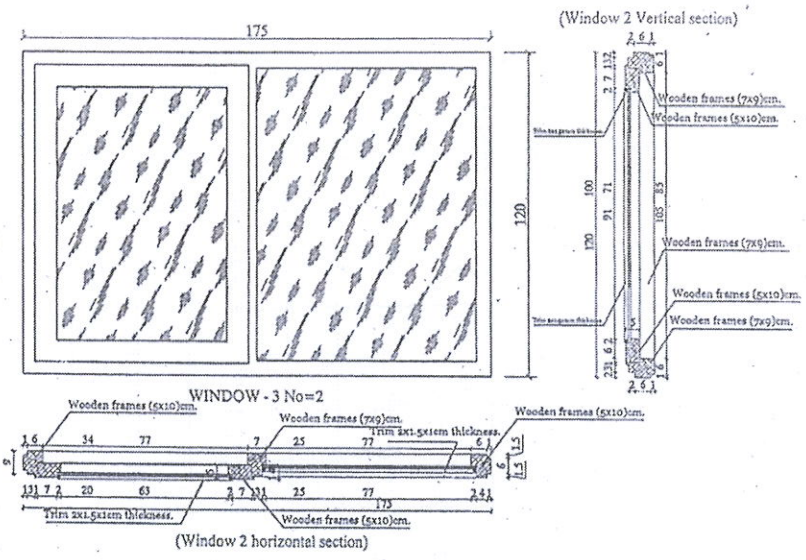

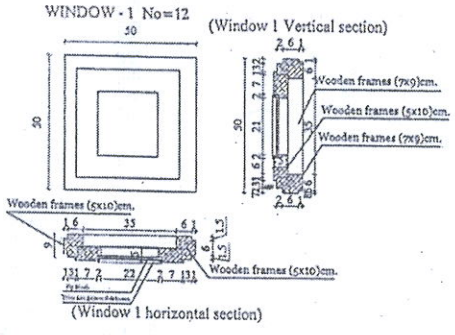

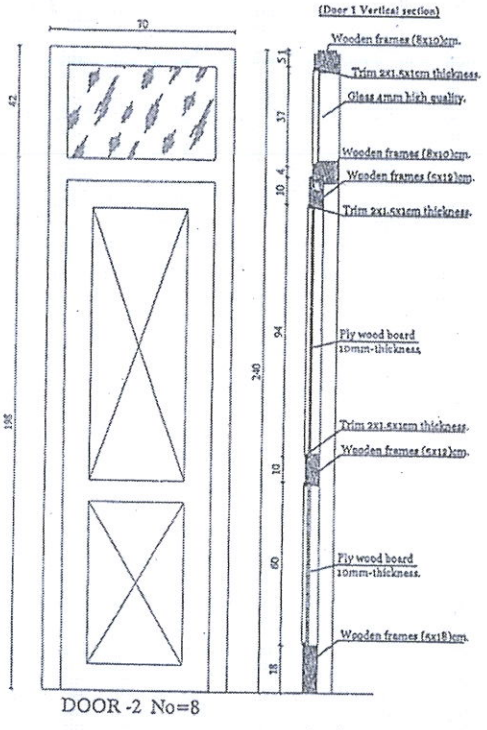

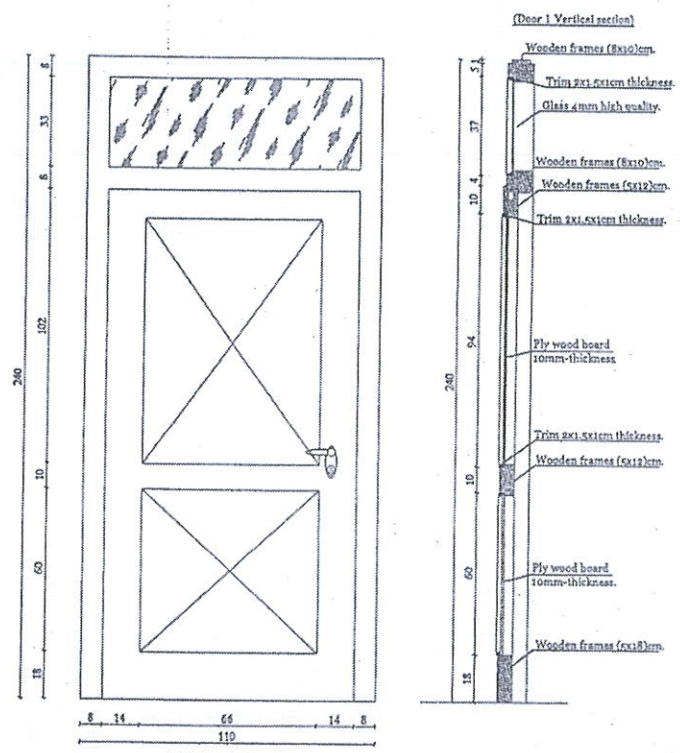

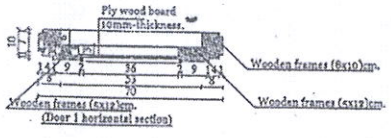

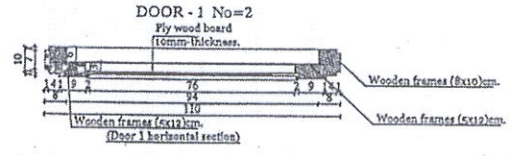

MINISTRY OF EDUCATION DEPARTMENT OF CONSTRUCTION	STANDARD SCHOOL DESIGN IN AFGHANISTAN	ARCHITECT/DESIGN	AFWAHMAD JAN	APPROVED DRAWING	ENG.AB MOMIN RAAD	TYPE	ARCHITECTURE	PROJECT NAME	10 LATRINE FROM BUNT BRICK I BEAM ROOF.
		CHECKED BY	ENG.S.ABDUL AFGHAN	SCALE	AS SHOWN (A-3)	CODE	SHEET No	DRAWING TITLE	DETAILS
		TECH.APPROVED BY	ENG.AB.MATIN HAQIQ	DATE	3.22.2014	L-MPW-012			

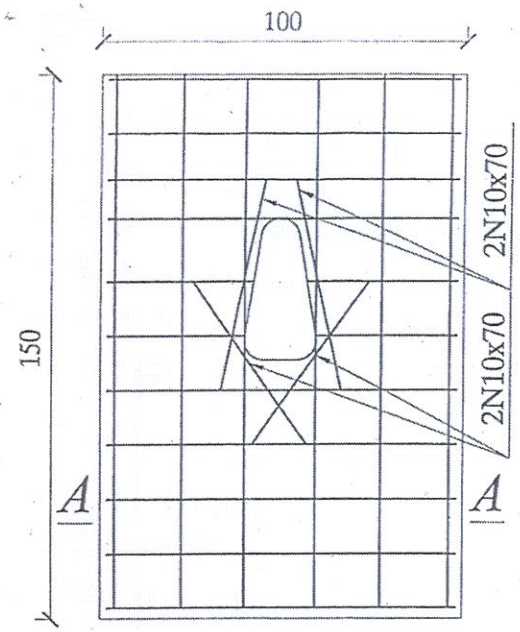

SEC A–A

Precast slab-2 150x100

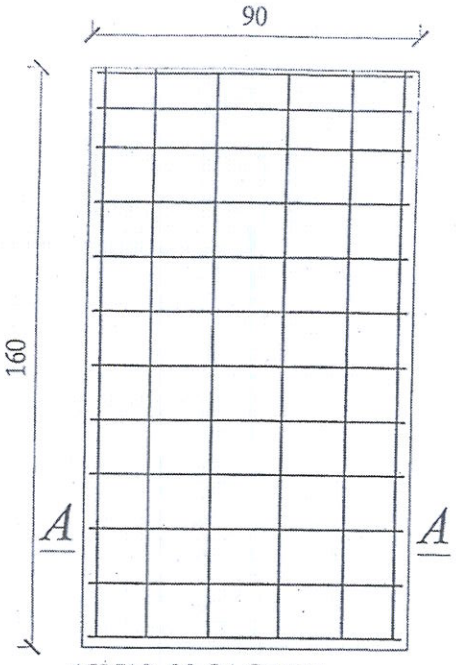

SEC A–A

Precast slab-1 160x90

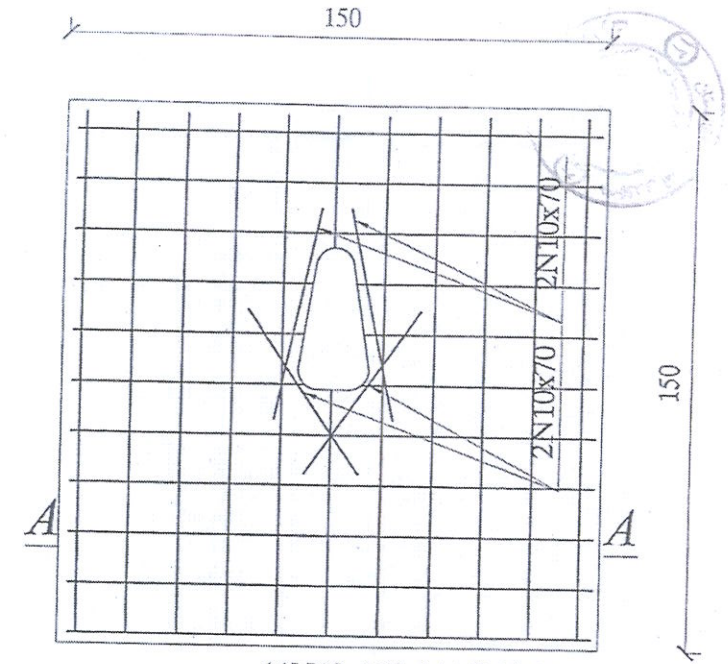

SEC A–A

Precast slab-3 150x150

MINISTRY OF EDUCATION DEPARTMENT OF CONSTRUCTION	STANDARD SCHOOL DESIGN IN AFGHANISTAN	ARCHITECT/DESIGN	AH.MAWAND .M	APPROVED Doc/Mie	ENG.ABJMOMIN RAAD	TYPE	ARCHITECTURE	PROJECT NAME	10 LATRINE FROM BUNT BRICK I BEAM ROOF.
		CHECKED BY	ENG.S.RAGOOL AFGHANI	SCALE	AS SHOWN (A3)	CODE / SHEET No		DRAWING TITLE	DETAILS FOR SLABS
		TECH- APPROVED BY	ENG.ABJMATIN MAGOL	DATE	3.23.2014	Lk/dw-012			

PRODUCED BY AN AUTODESK EDUCATIONAL PRODUCT

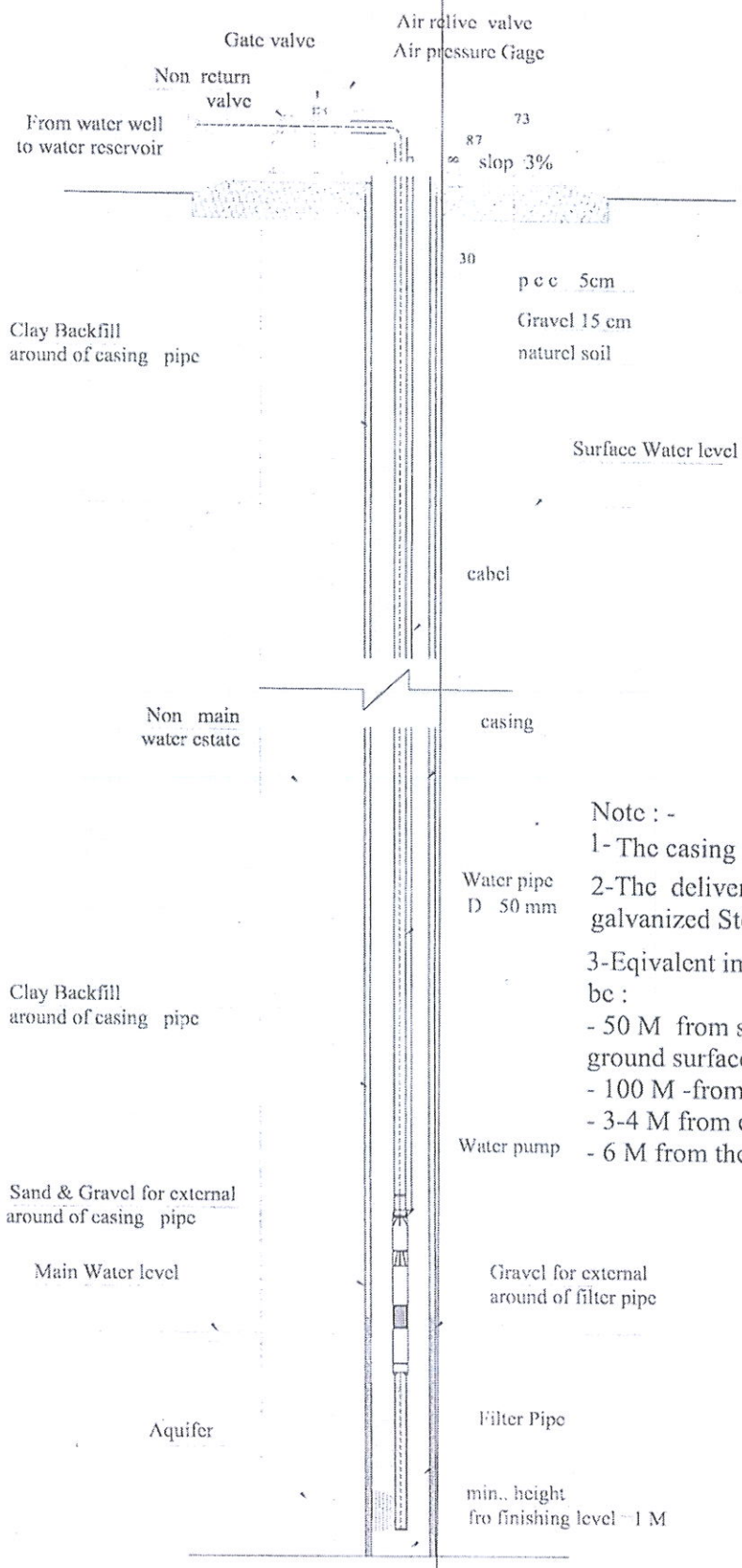

Note : -

1- The casing material will be PVC or Steel

2-The delivery pipe material will be PVC or galvanized Steel or HDEP

3-Eqivalent imperial distances the well must be :

- 50 M from sewege effluent discharge the ground surface.
- 100 M -from a sewege lagoon.
- 3-4 M from existing buildings.
- 6 M from the road and public highway.

BORED WELL.

Majid

MINISTRY OF EDUCATION DEPARTMENT OF CONSTRUCTION	STANDARD SCHOOL DESIGN IN AFGHANISTAN	PROJECT NAME	BORED WATER WELL
		PROJECT TYPE AND DRAWING TITLE	CROSS SECTION OF WATER BORED WELL

PRODUCED BY AN AUTODESK EDUCATIONAL PRODUCT

SPECIFICATION OF ELECTRICAL EQUIPMENT 100 METERS WELL

NO.	DESCRIPTION	SIGNS	UNIT	PIECES	REMARKS
1	SOLAR PANEL MADE IN INDIA 240 WATTS GOOD QUALITY		NO	12	
2	CHARGE CONTROLLER 48 VOLTS 30 AMPERES WITH WARRANTY OF ONE YEARS		NO	3	
3	ASIDE BATTERY 12 VOLTS 150 AMPERES GOOD QUALITY.		NO	4	
4	STAND FOR SOLAR PANEL.		SET	3	
5	WATER PUMP CONTROLLER SWITCH MODEL(QK121 series intelligent control) WITH ALL SENSORS.		NO	1	
6	Cable1x10mm²COPPER FOR CONNECTION OF GROUNDING ROD		M	35	
7	Cable1x25 mm²COPPER FROM SOLAR PANEL TO BATTERY.		M	150	TAKE 2 COLOR TO BE SAVE AND EASY INSTALLATION.
8	WIRE 1(2x4) mm² COPPER FROM INVERTER TO WATER PUMP SWITCH.		M	30	
9	WIRE 1(3x4) mm² COPPER FROM water pump switch TO WATER PUMP.		M	140	
10	GROUNDING ROD 3M LENGTH, ø20MM(COPPER)		NO	1	
11	LIGHTING PROTECTION ROD 1.5 M LENGTH, ø19MM(COPPER).		NO	3	
12	INVERTER INPUT 48 VOLTS AND OUT PUT 220 VOLTS 5000VA CAPACITY HIGH QUALITY AND WARRANTY OF 1 YEAR		NO	1	
13	PVC PIPE 1 INCH DIAMETER FOR CARING WATER FROM WELL TO RESERVOIR.		LSM		
13	Water pump SUBMERSIBLE1.5kw 1 PHASE 220 VOLTS		NO	1	

Notes.
1. Use solar panel Made in India good quality.
2. Try solar panel should be near to the charge controller and batteries.
3. Use Charge controller made in India good quality with warranty of 1 years.
4. If distance between the solar panel and battery is 15 meter use wire 10mm² copper good quality.
5. If distance between the solar panel and battery is 25 meters use wire 16 mm² copper good quality.
6. If the water pump and switch distance is 96 to 150 meters use wire 2.5 mm².
7. Wire of connection between batters 16mm² copper good quality.
8. If inverter has charge controller 25Ampers don need the charge controllers. Connect the solar wires in the inverter.
9. Use the switch of QK121 which is automatic and have 3 sensors, one for full of reservoir, one for empty of reservoir and one for the water pump protection.
10. At less water pump must be 7 meter in the water,(waterpump should be in the water at less 7 meters.
11. Solar penal most has stand (plastic,airon and etc) which well be adjustable according the angel of sun shine.
12. In drawing shown 2 solar penal can you joint 4 penal not problem.
13. If the invertors capacity like the drawing is not allowable use the big size of it, but must be the good quality.
14. Solar penal stand must be tide in the ground or that aria which solar penal located for prevent the damage of wend energy.
15. One person need for the operating and maintenance of the system. Operator must take a short term training abut the solar system.
16. All penal should connect to the lighting protection rod and to grounding rod(solar penal's, charge controllers, and.
17. Install 3 lighting protections rod,one in one stand,one in second stand and one in the 3th stand.
18. connect all lighting protections rod to gather and bring one cable to grounding rod.
19. This system is design for 15m³ per day. If you need less water can use electricity for other equipments but the water pump must be disconnect from inverter.Don't use those electrical equipment which are more then 3.5KW. When water pump is working other equipments must be off.

MINISTRY OF EDUCATION
DEPARTMENT OF CONTRACTION

STANDARD SCHOOL DESIGN
IN AFGHANISTAN

ELECTRICAL DESIGN	ENG FEROZMAZIDI	APPROVED Dev Mgr	ENG AB MOMEN RAD	TYPE	ELECTRICAL
CHECKED BY	ARCH BAID RAHOOL	SCALE	AS SHOWN(A3)	CODE NO	SHEET No 1 / 1
TECH. APPROVED BY	ENG ABDULHAYEN RAHOOL	DATE	2023-05-09		

PROJECT NAME

DRAWING TITLE: SOLAR WATER PUMP FOR 100 METERS LEGEND AND NOTES

PRODUCED BY AN AUTODESK EDUCATIONAL PRODUCT

PRODUCED BY AN AUTODESK EDUCATIONAL PRODUCT

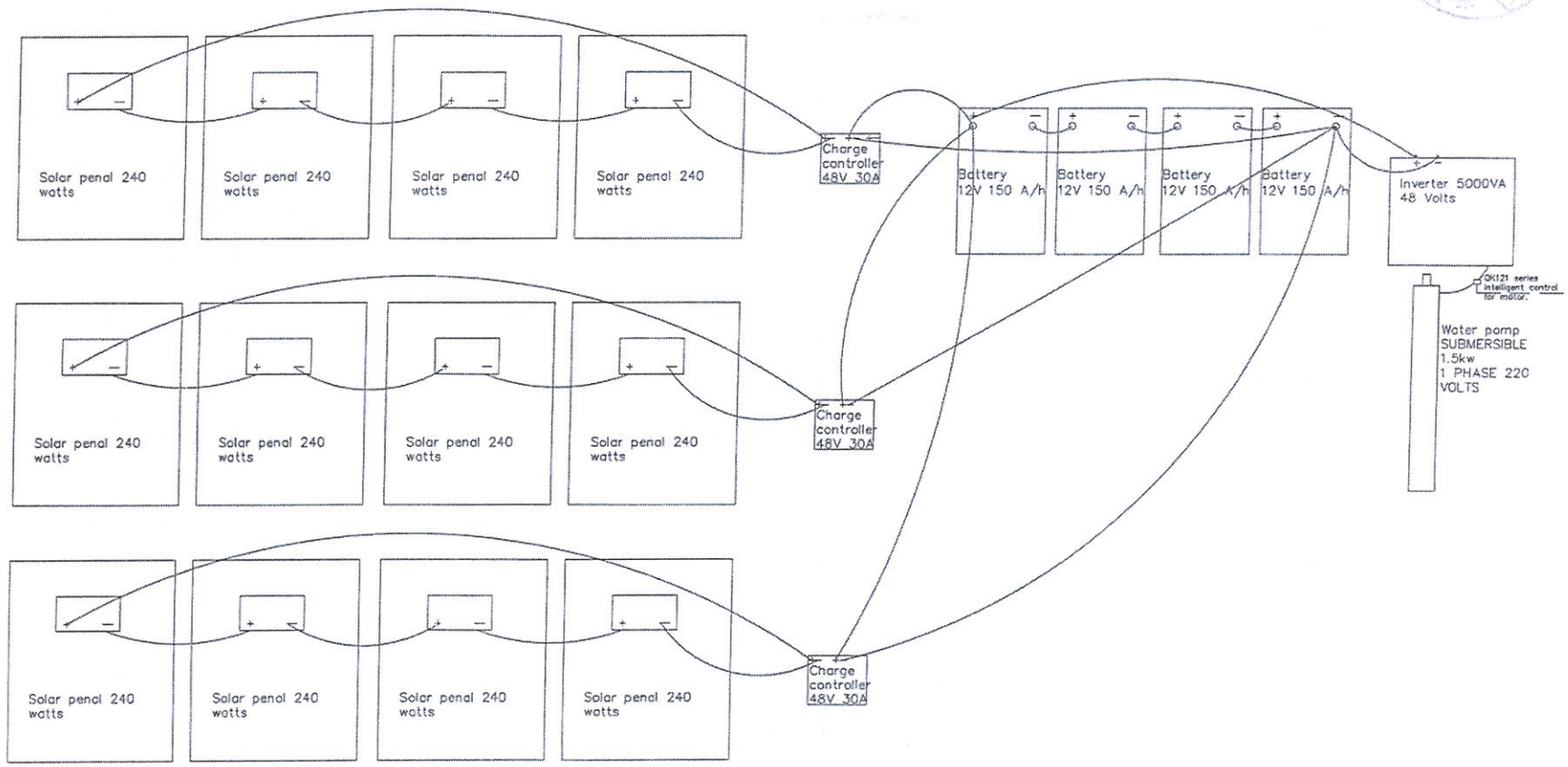

MINISTRY OF EDUCATION
DEPARTMENT OF CONTRACTION

STANDARD SCHOOL DESIGN
IN AFGHANISTAN

ELECTRICAL DESIGN	ENG FEROZ SAEDI	APPROVED DAIRE	ENGLAB MOMEN RAD	TYPE		ELECTRICAL
CHECKED BY	ABDUL SAID BASOOL	SCALE	AYSHGOOT LAD	CODE NO	SHEET No	2 / 4
TECH. APPROVED BY	ENGLAB MATIN MAJDI	DATE	2025-03-19			

PROJECT NAME

DRAWING TITLE SOLAR WATER PUMP FOR 100 METERS PENAL STAND AND GROUDING.

PRODUCED BY AN AUTODESK EDUCATIONAL PRODUCT

PRODUCED BY AN AUTODESK EDUCATIONAL PRODUCT

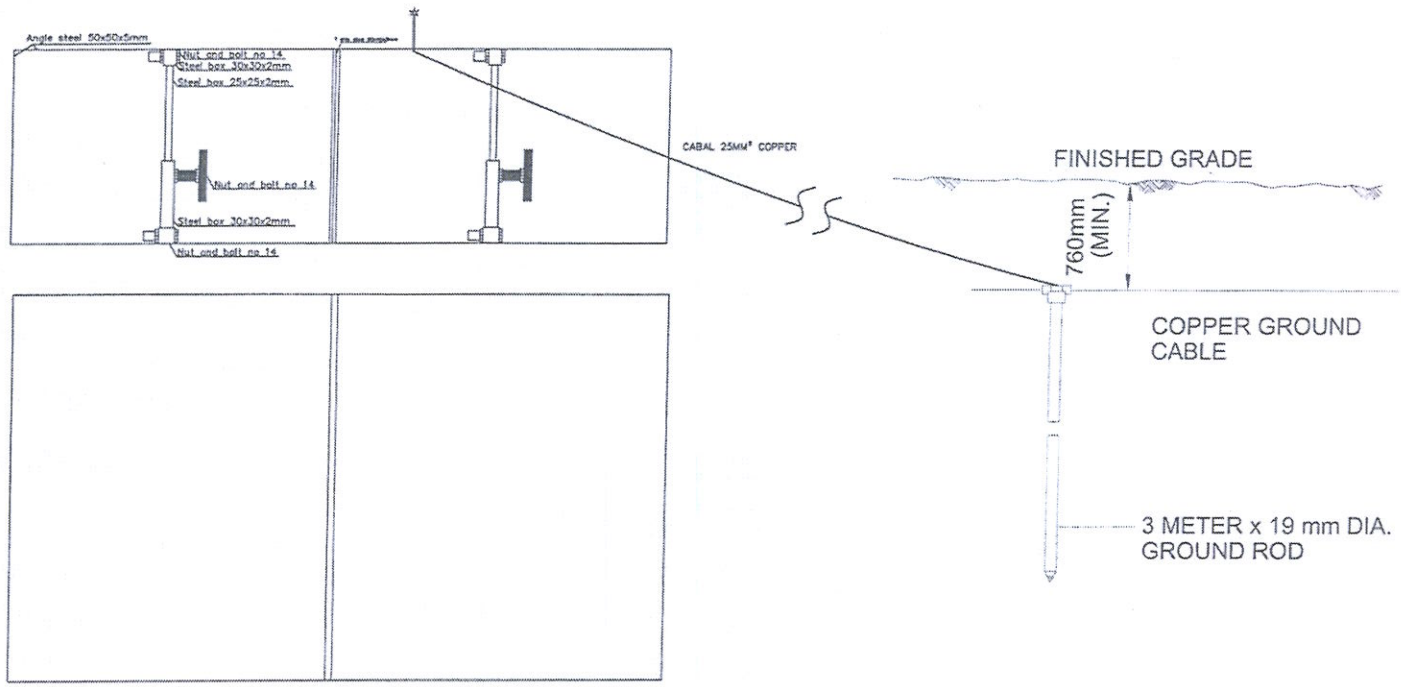

MINISTRY OF EDUCATION
DEPARTMENT OF CONTRACTION

STANDARD SCHOOL DESIGN IN AFGHANISTAN

ELECTRICAL DESIGN	ENG HERIZ SADIQI	APPROVED BY	ENG AB AIGMEN RAD	TYPE	ELECTRICAL	PROJECT NAME
DRAWN BY	ARCH SAID RASOOL	SCALE	AS SHOWN (A3)	CODE No	SHEET No 5 / 6	DRAWING TITLE: SOLAR WATER PUMP FOR 100 METERS INSTALATION DIAGRAM.
TECH. APPROVED BY	ENG AB MATIN MAJOOL	DATE	2015-05-19			

PRODUCED BY AN AUTODESK EDUCATIONAL PRODUCT

PRODUCED BY AN AUTODESK EDUCATIONAL PRODUCT

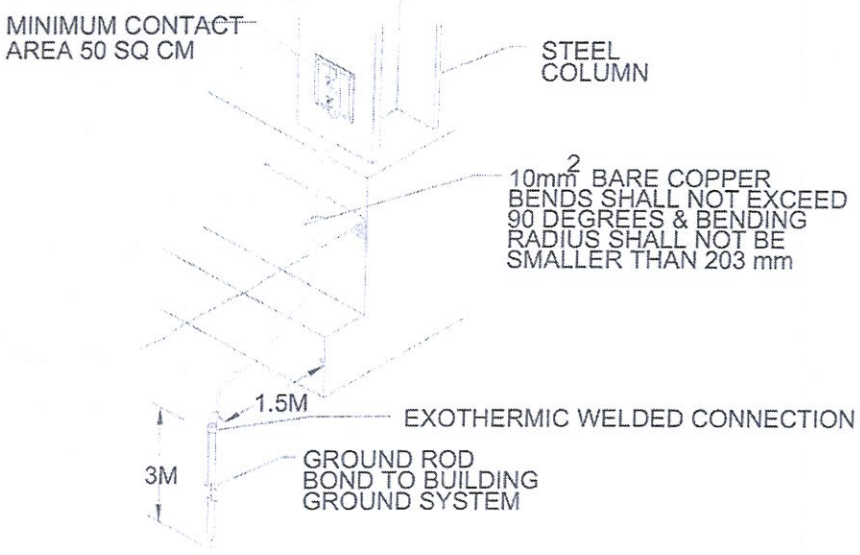

COLUMN GROUNDING DETAIL

NOT TO SCALE

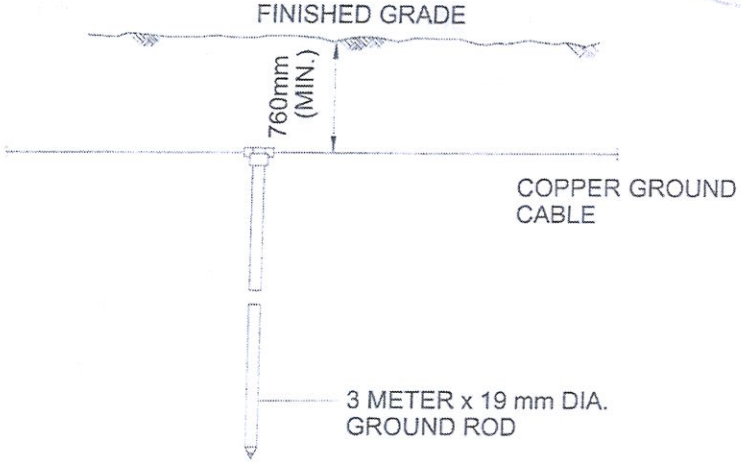

NOTES:

1. CONDUCTOR SIZE SHALL BE AS INDICATED ON PLANS.
2. EXOTHERMIC WELDS SHALL BE AS RECOMMENDED BY MANUFACTURER FOR THE SIZE OF CONNECTION AND MATERIAL INVOLVED.SEE DETAIL 5 ON SHEET SE-7.

BELOW GRADE GROUNDING ROD DETAIL

NOT TO SCALE

MINISTRY OF EDUCATION
DEPARTMENT OF CONTRACTION

STANDARD SCHOOL DESIGN IN AFGHANISTAN

ELECTRICAL DESIGN	ENG FERO(SAAD)	APPROVED Dir/Mn	ENG.AB MOMEN RAD	TYPE		ELECTRICAL	
CHECKED BY	ARCH SAID WASOOL	SCALE	AS SHOWN (A3)	CODE NO	SHEET No		
TECH. APPROVED BY	ENG ABDULATIN MAQOL	DATE	2013-08-28				

PROJECT NAME

DRAWING TITLE SOLAR WATER PUMP FOR 100 METERS GROUNDING.

PRODUCED BY AN AUTODESK EDUCATIONAL PRODUCT

Garbage Collection point

PCC Precast Garbage Ø 90 cm

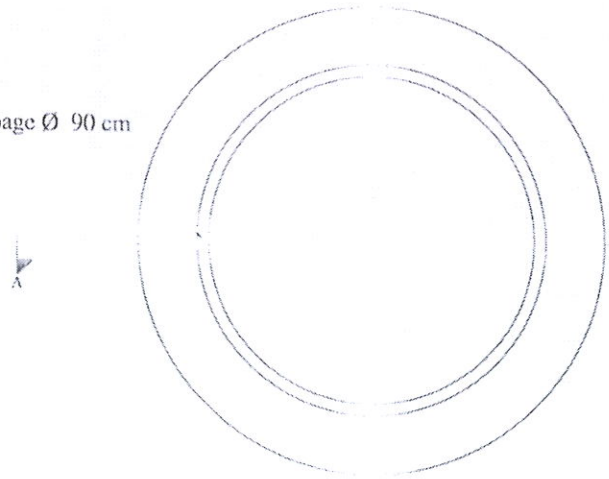

PLAN

PCC Precast Garbage Ø 90 cm

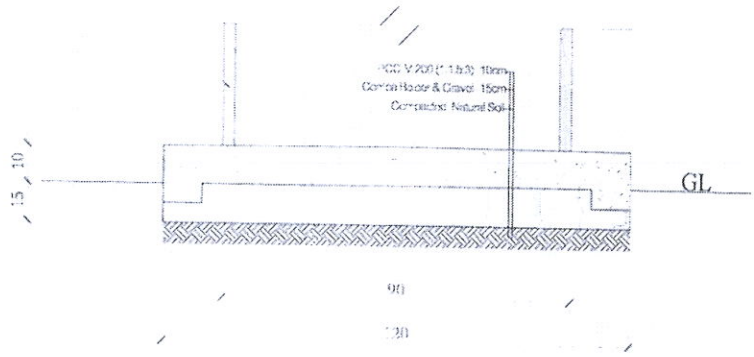

SECTION

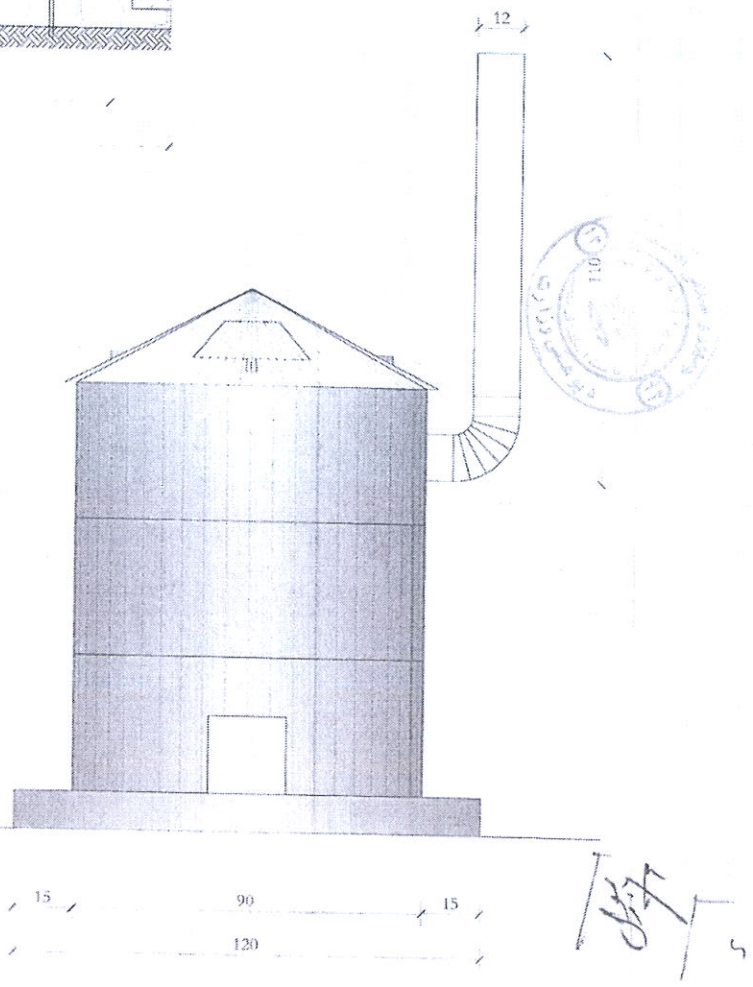

ELEVATION

MINISTRY OF EDUCATION DEPARTMENT OF CONTRACTION	STANDARD SCHOOL DESIGN IN AFGHANISTAN					PROJECT NAME	PCC GARBAGE Ø 90 CM
						DRAWING TITLE	View & detail

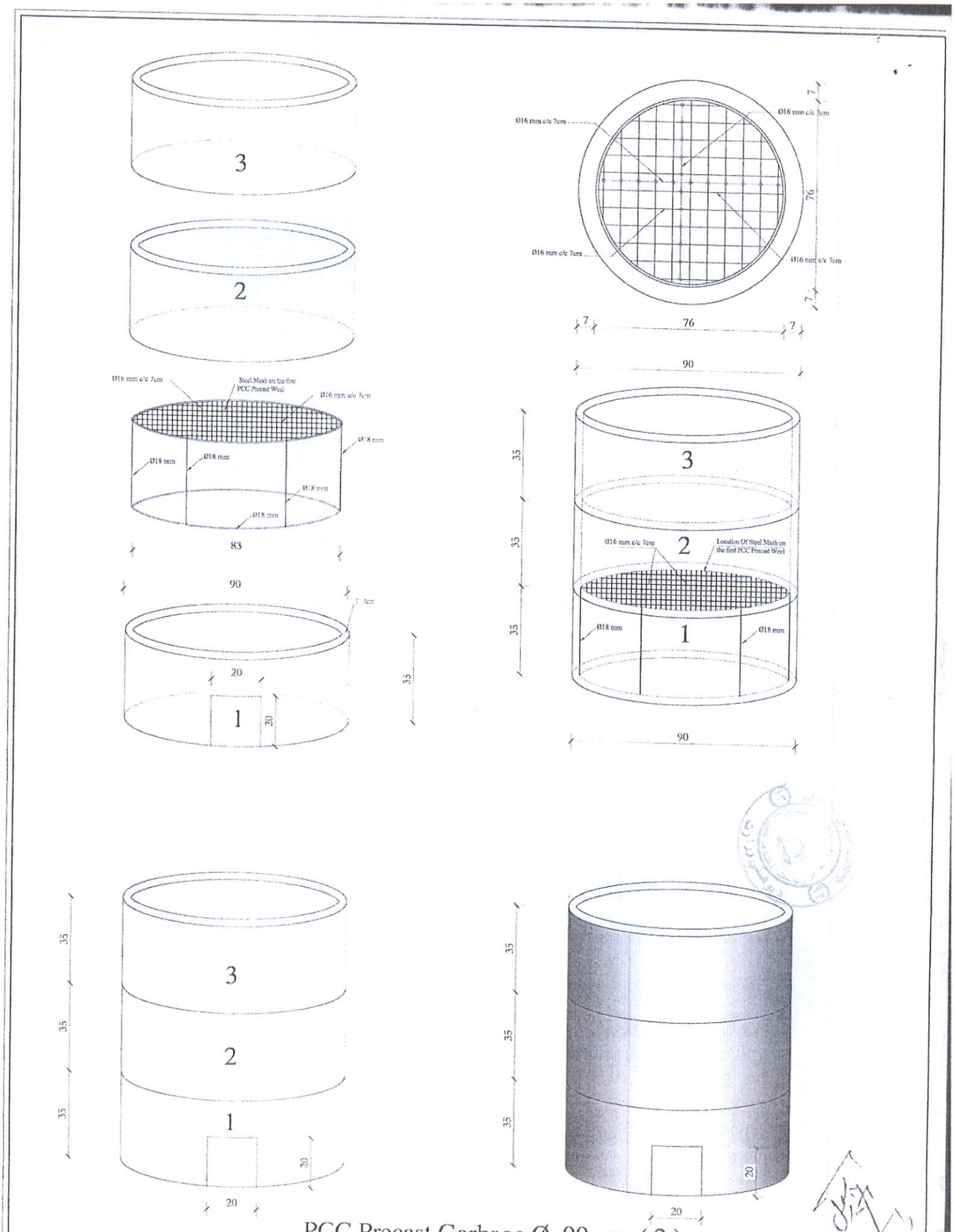
3
2
Ø16 mm c/c 7cm
Steel Mash on the first PCC Precast Weel
Ø18 mm
83
90
7 cm
20
1
35
Location Of Steel Mash on the first PCC Precast Weel
76
7
PCC Precast Garbage Ø 90 cm (2)
MINISTRY OF EDUCATION
DEPARTMENT OF CONTRACTION
STANDARD SCHOOL DESIGN IN AFGHANISTAN
PROJECT NAME
PCC GARBAGE Ø 90 CM
DRAWING TITLE
plan& view & detail

PRODUCED BY AN AUTODESK EDUCATIONAL PRODUCT

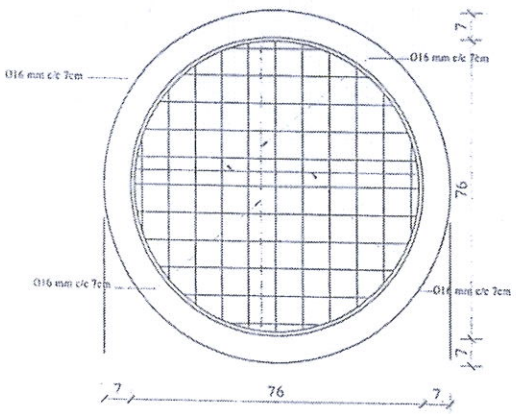

Code 201/240 Lit.

BASKET PRICE 3000 AFGHANIS. (1)

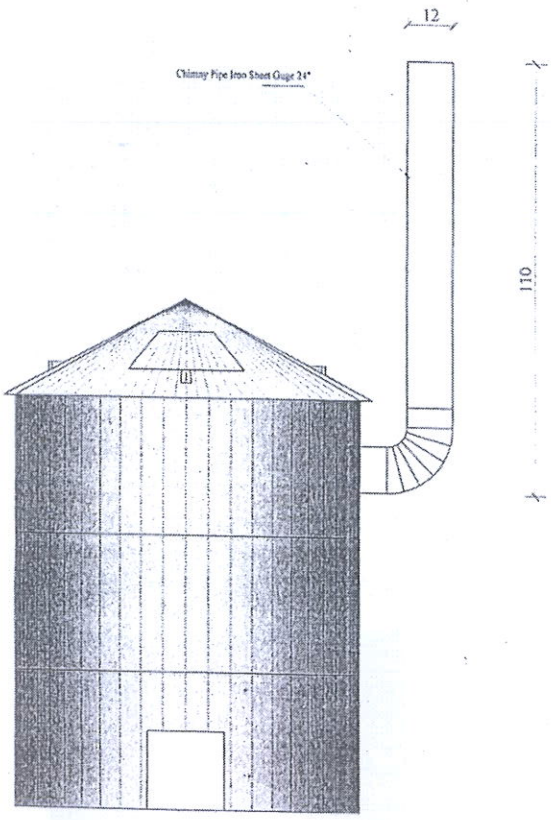

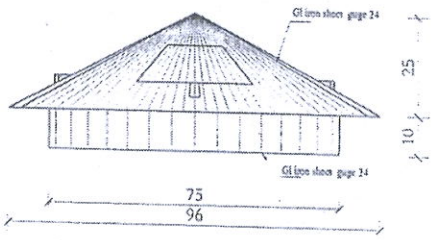

View of Iron Sheet Cover guge 24"

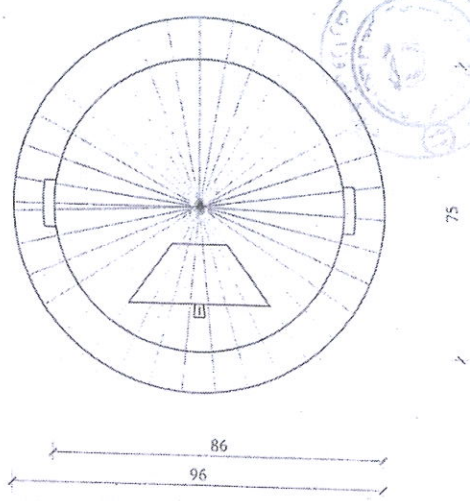

Plan of Iron Sheet Cover guge 24"

MINISTRY OF EDUCATION DEPARTMENT OF CONTRACTION	STANDARD SCHOOL DESIGN IN AFGHANISTAN					PROJECT NAME	PCC GARBAGE Ø 90 CM
						DRAWING TITLE	View & detail

PRODUCED BY AN AUTODESK EDUCATIONAL PRODUCT

PRODUCED BY AN AUTODESK EDUCATIONAL PRODUCT