Water Tank Front Elevation

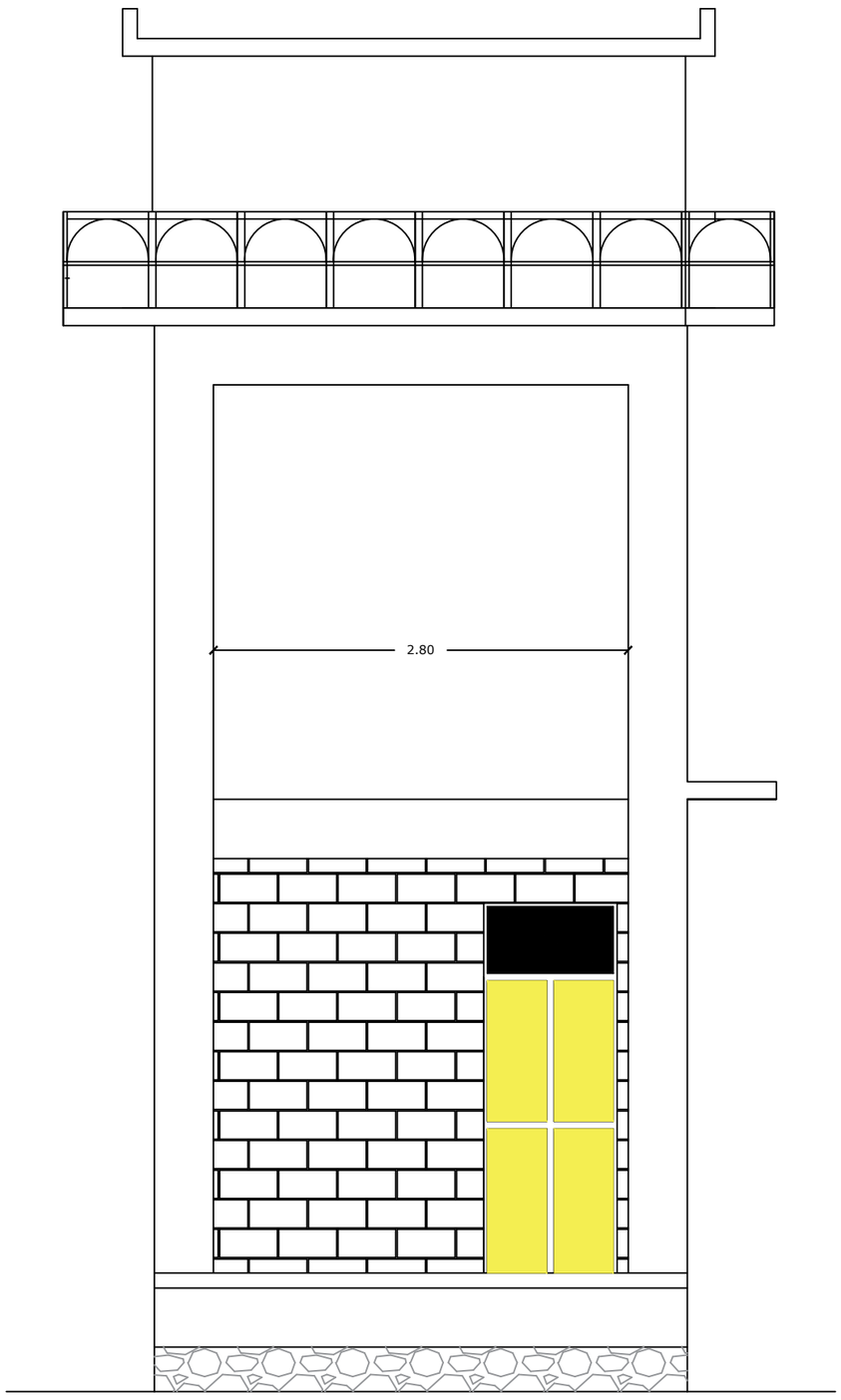

Head Water Tank Plan

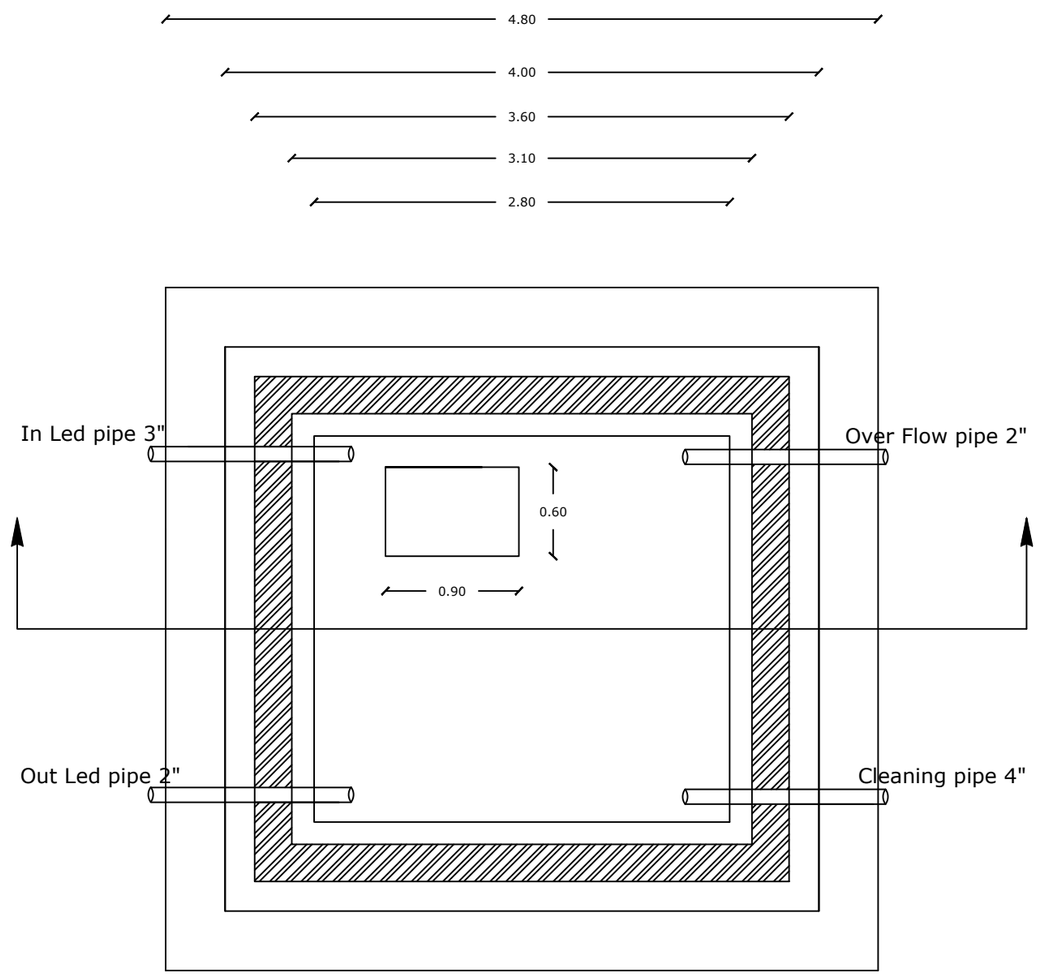

Water Tank Room Plan

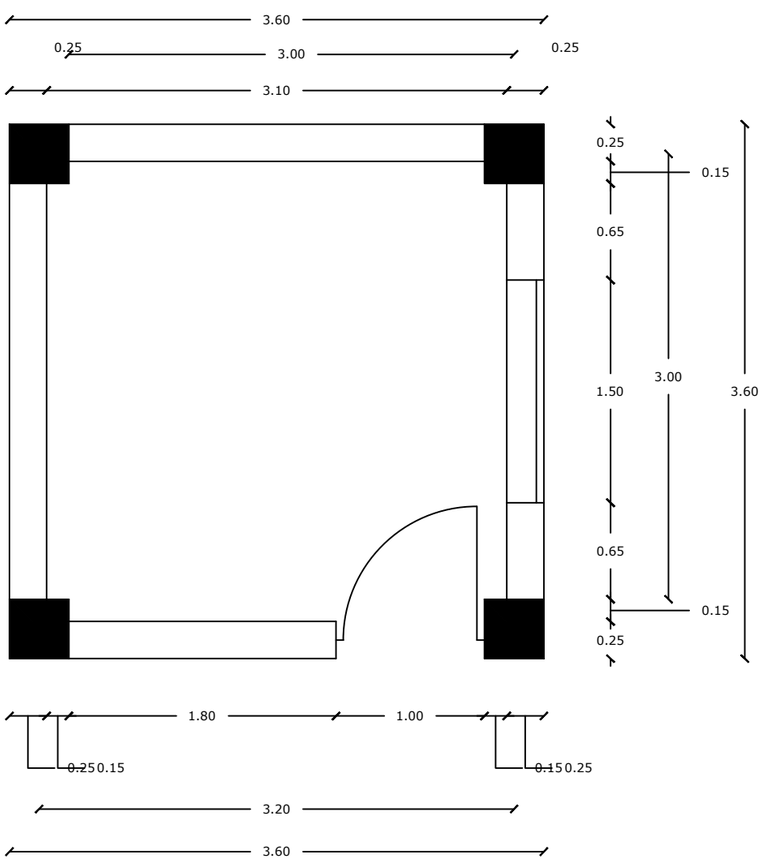

Water Tank Foundation Plan

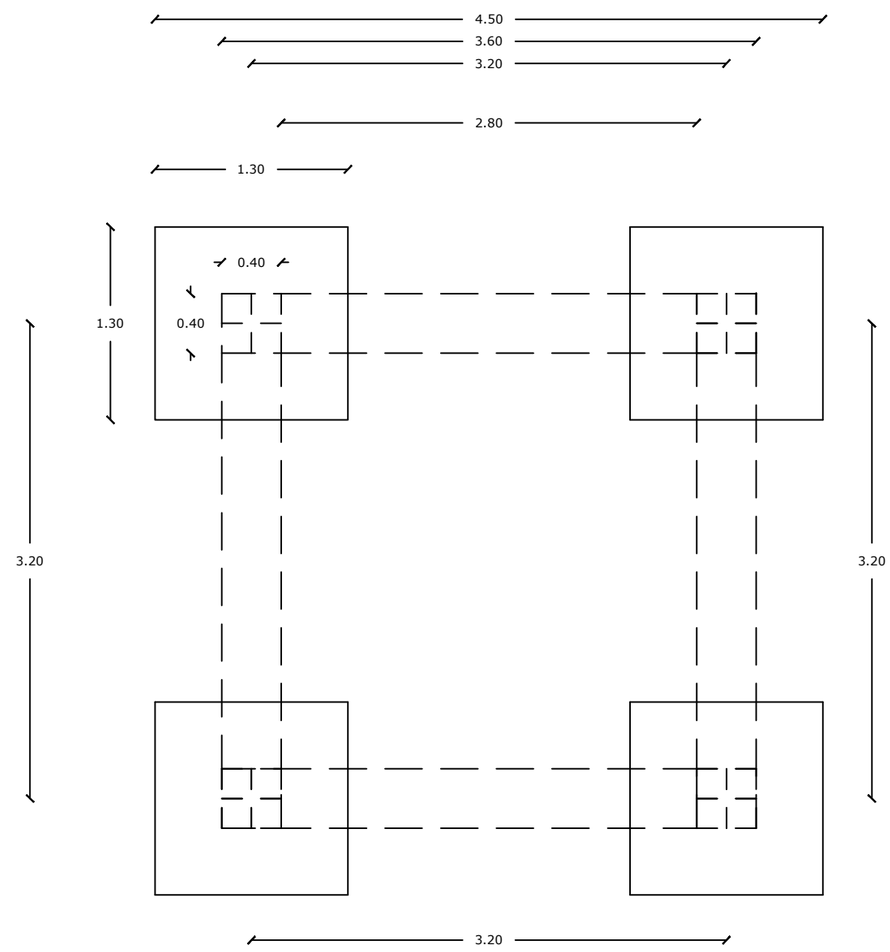

Head Water Footing Plan

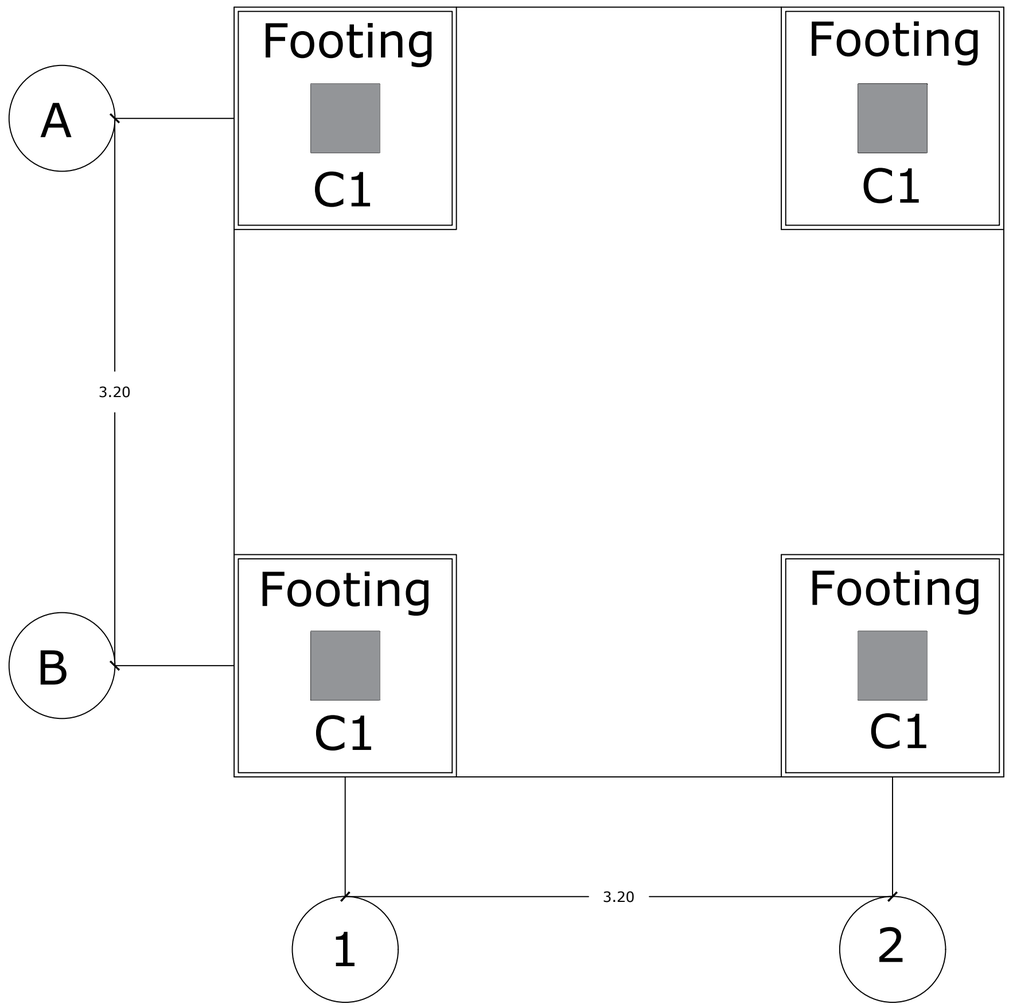

SECTION 1-1

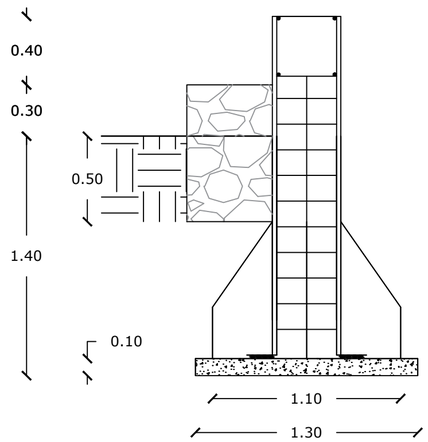

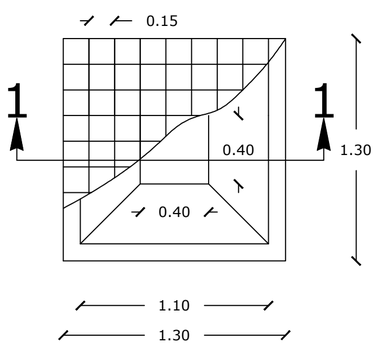

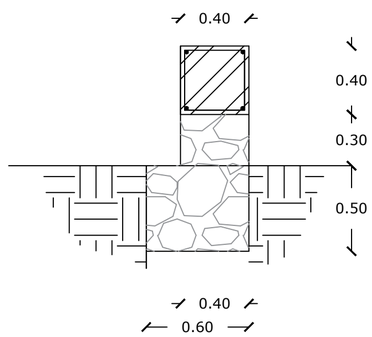

Water Tank Section

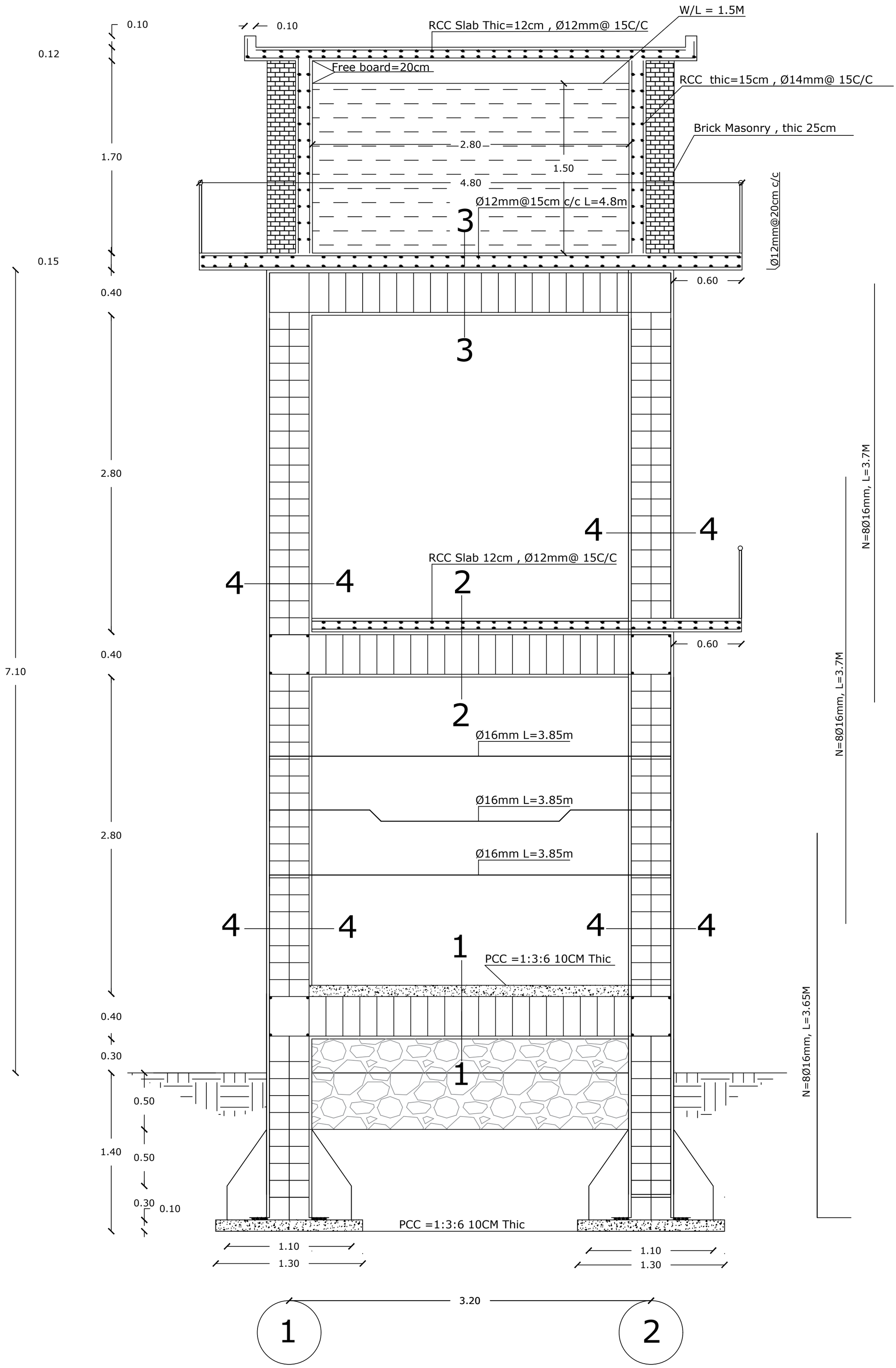

Water Tank Pipe Network

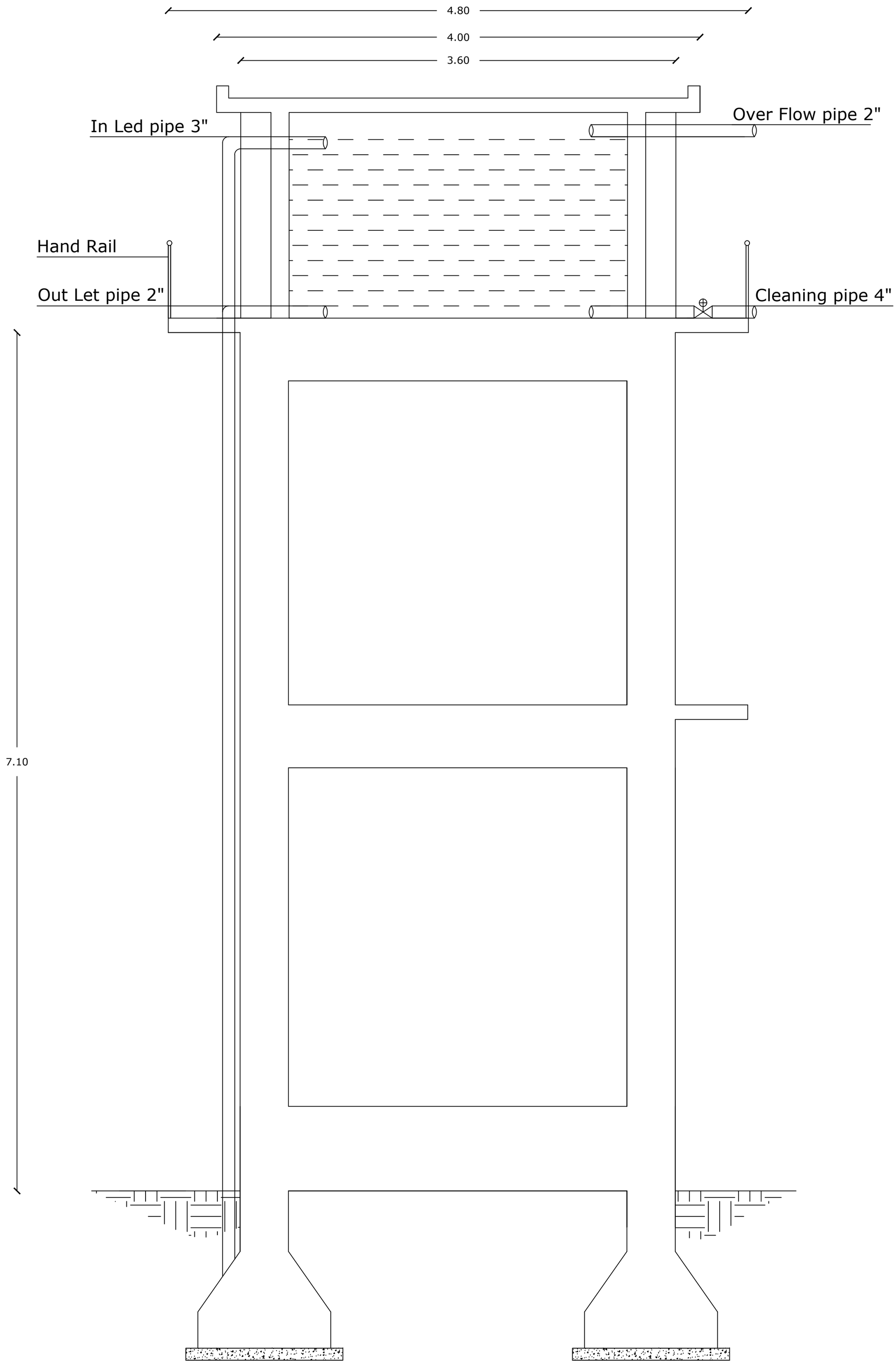

Water Tank Pipe Network

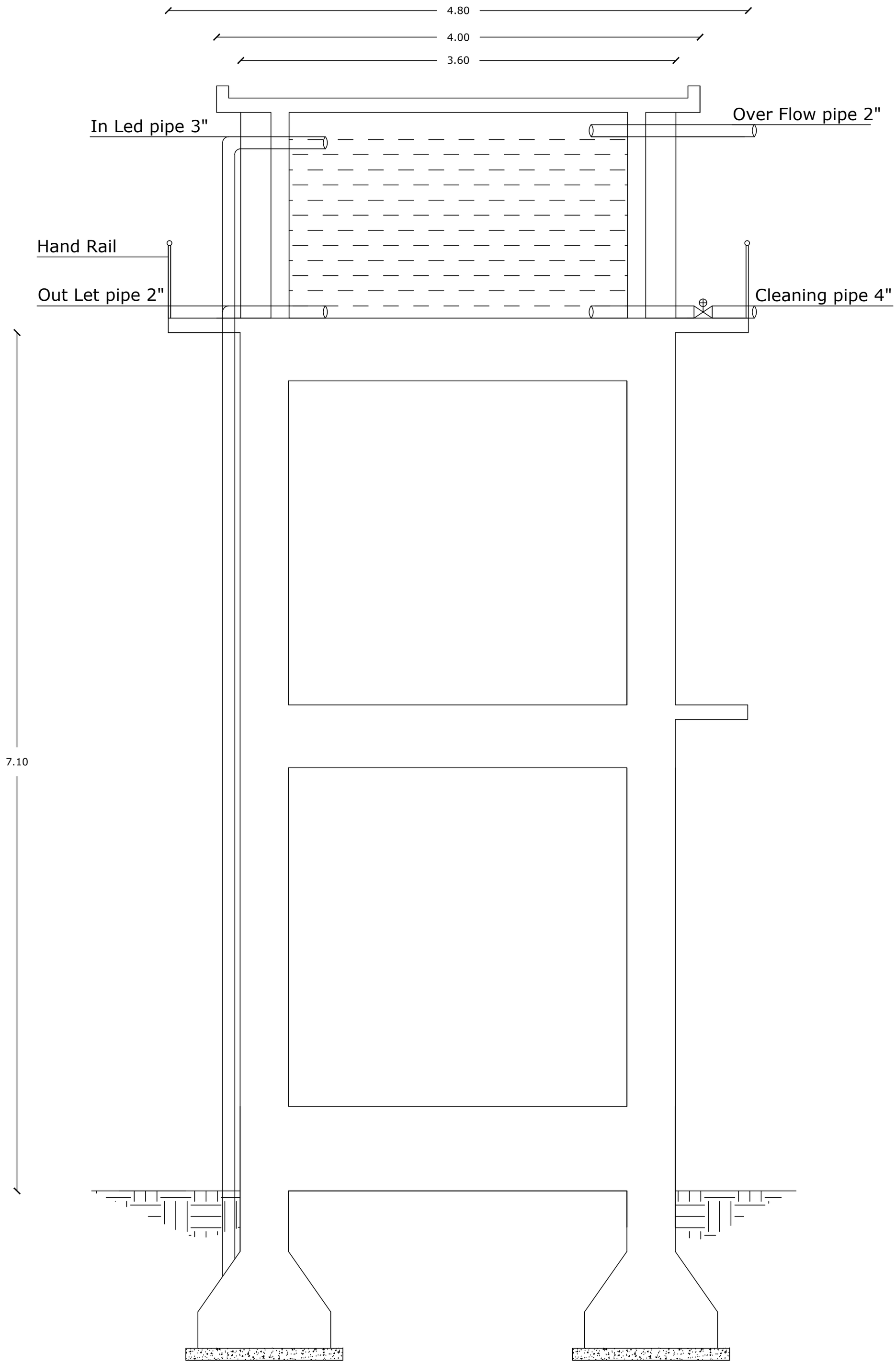

SEC 1-1

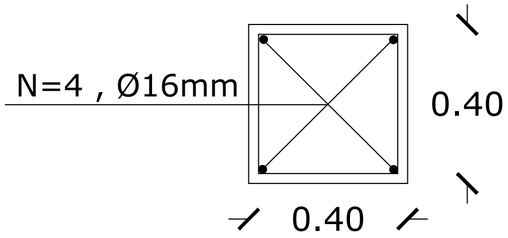

SEC 4-4

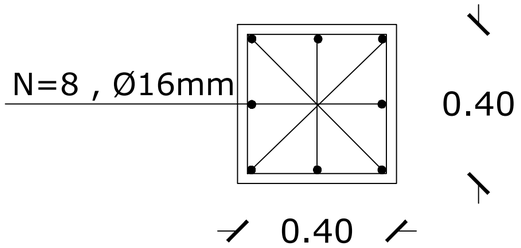

SEC 2-2

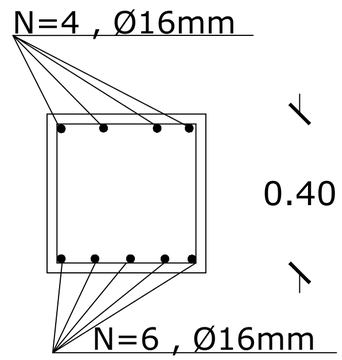

SEC 3-3

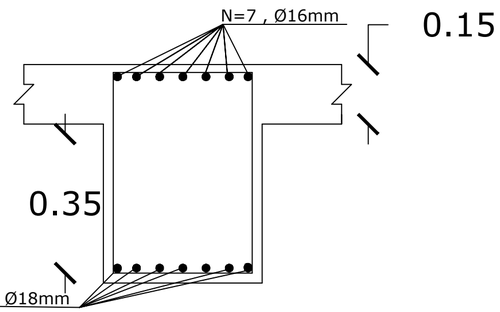

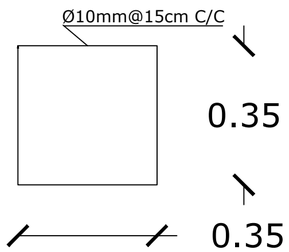

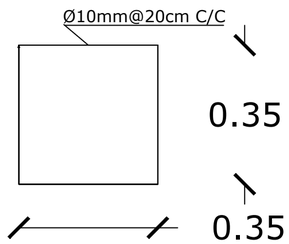

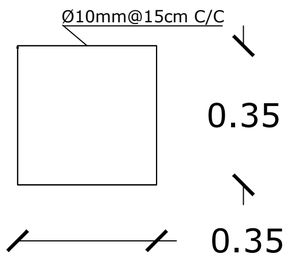

Hand Rail Detail

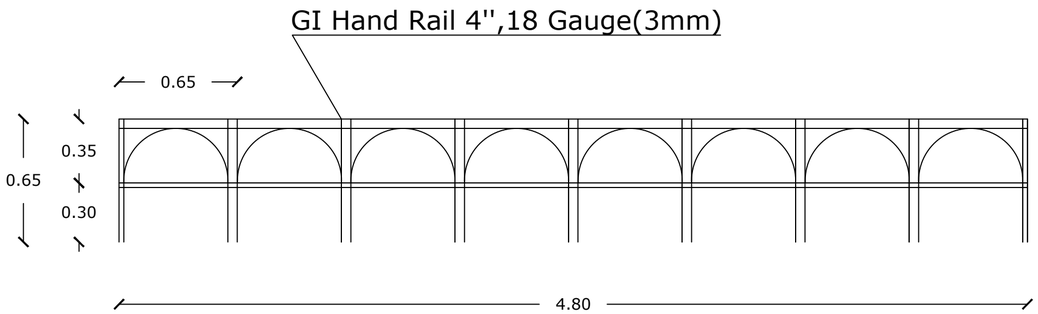

Detail of Distribution Pipe

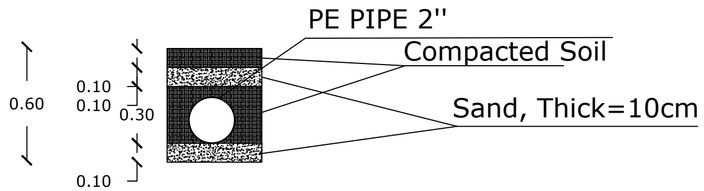

Metallic Stair A-Detail

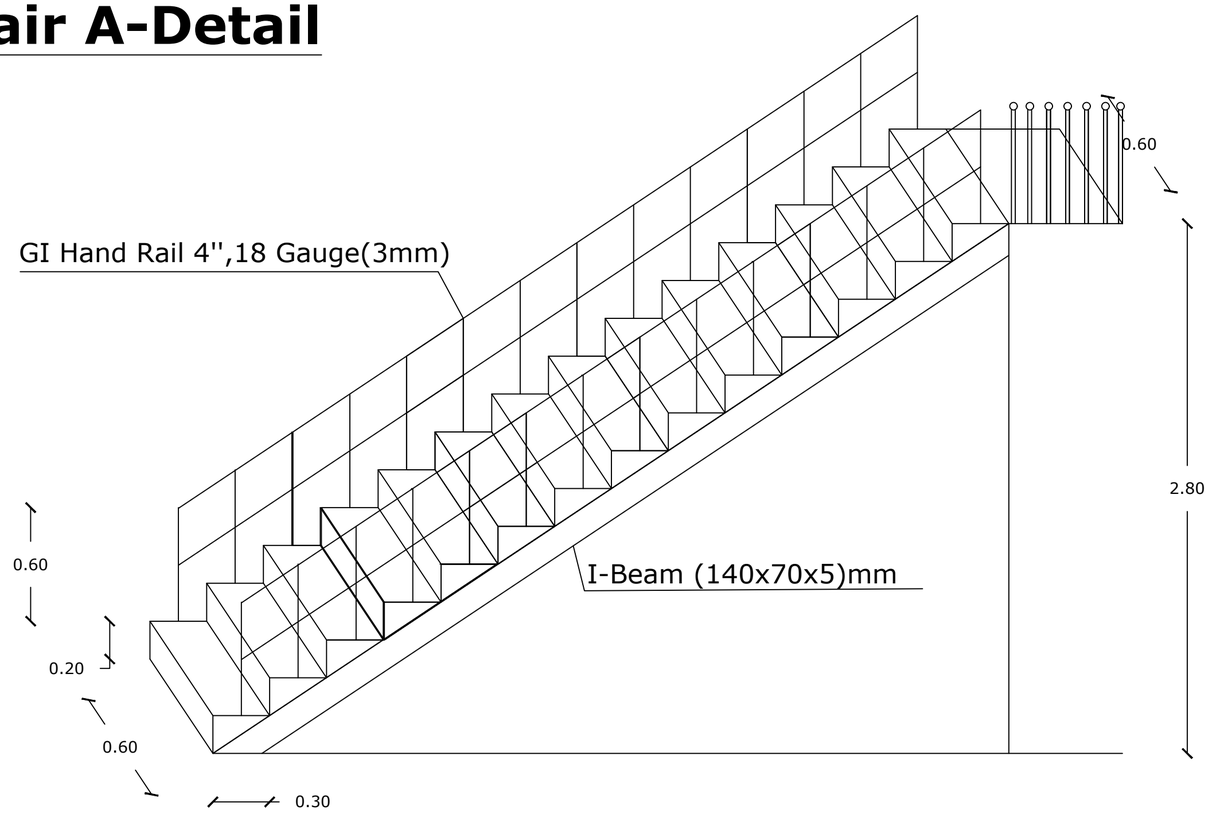
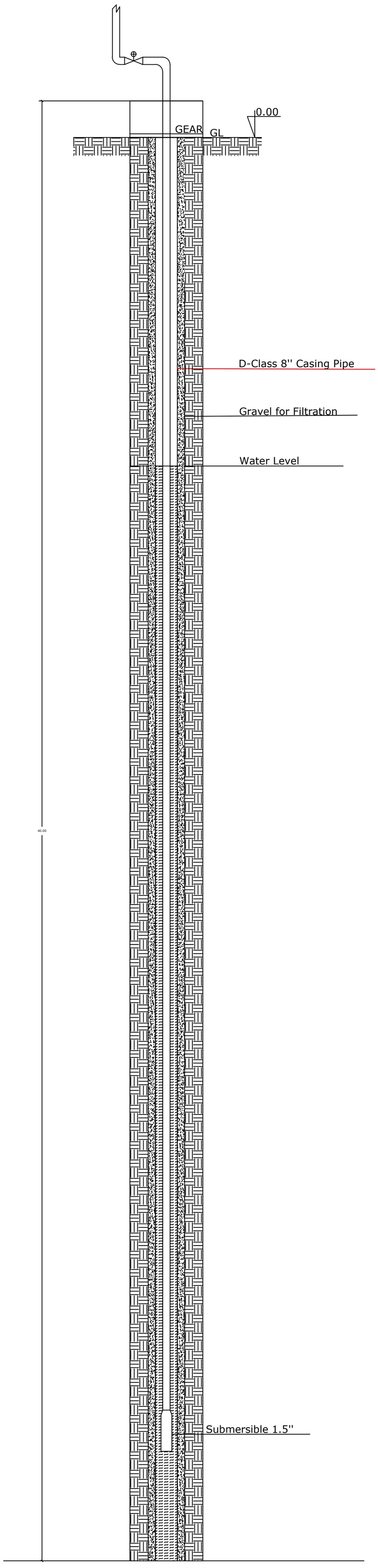
Propose Bore Well Profile