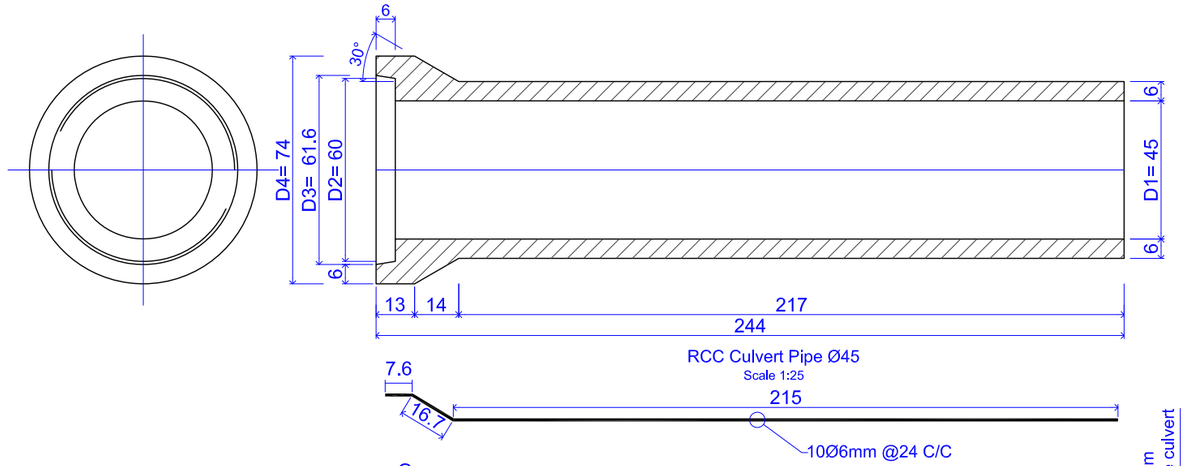

RCC Culvert Pipe Ø45
Scale 1:25

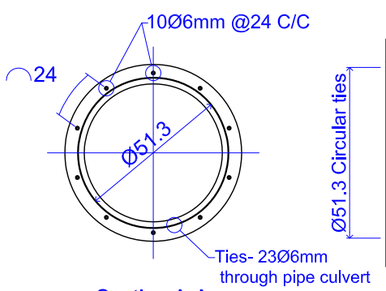

Section A-A

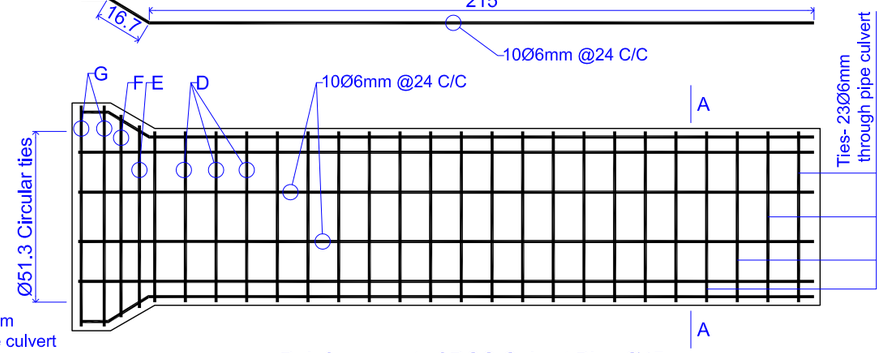

Reinforcement of RCC Culvert Pipe Ø45

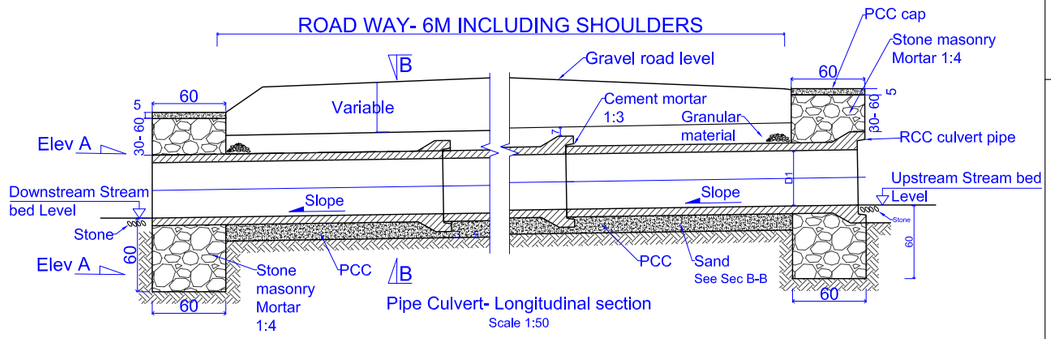

Pipe Culvert- Longitudinal section
Scale 1:50

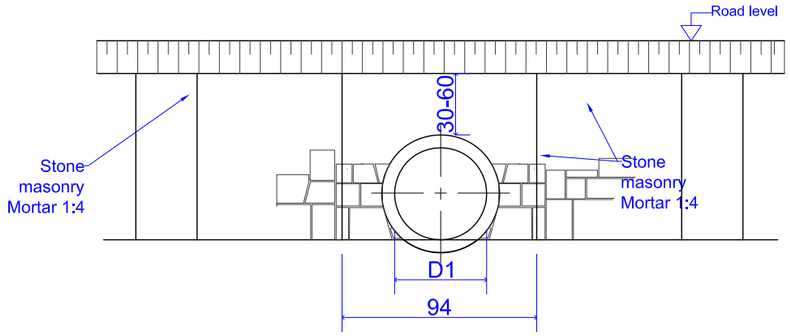

Elevation on A-A for single pipe head wall

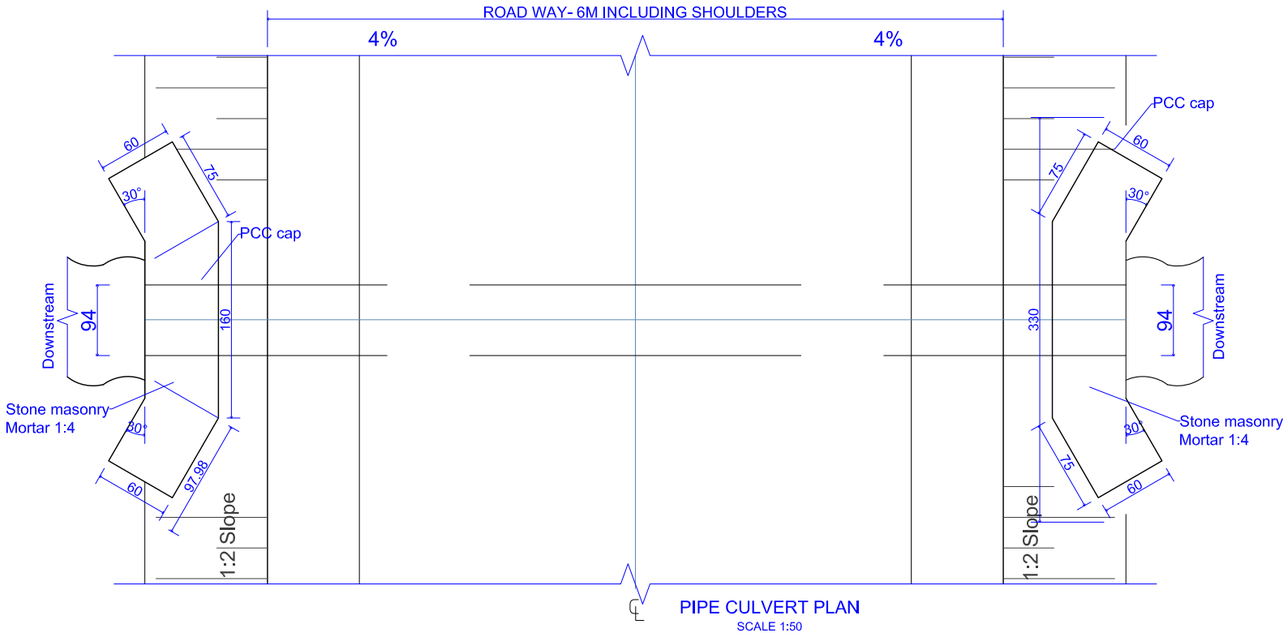

PIPE CULVERT PLAN
SCALE 1:50

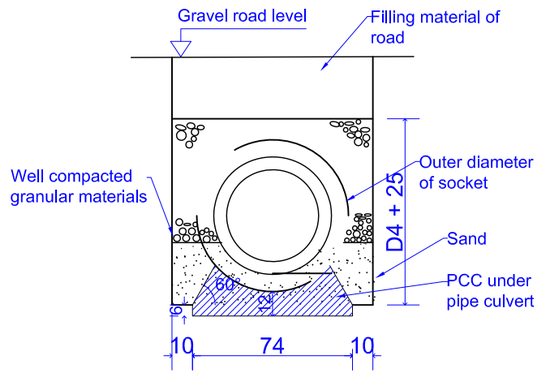

Cross section for single pipe B-B
Scale 1:50

Steel bars schedule

Pipe Ømm	Bar KG			Tension wire
	Ø6	Ø10	Total	
600	7	48	55	0.4
450	18	0	18	0.2
300	13	0	13	0.1

Link Ref.	Internal Ø	No/Pipe
D	51.3cm	23
E	58.8cm	1
F	64cm	1
G	67.9	2

Note:

- All dimensions are in cm
- Mortar for stone masonry 1:4
- Where ever practical the slope of the culvert
- is to match the slope of the existing stream bed.
- For details of dimensions D1, D2..etc. refer to RCC pipes- reinforcement and sections drawing.
- Slope along culvert to be 2% minimum, ideally it should be 5% but this will depend upon natural ground level.
- Granular material and filling to be place and compacted in 15cm layers.

UNLESS NOTED OTHERWISE, LINEAR DIMENSIONS SHOWN ARE IN CENTIMETER.

ACCESS TO SERVICES
UNHCR SUB OFFICE MAZAR-E-SHARIF

PROJECT TITLE	ROAD & CULVERT	PROVINCE	BALKH	GPS N	00' 00' 00"	DESIGNED BY	UNHCR SOM & WAW
DRAWING TITLE	REHNOVA. EXIS. CLVRT	DISTRICT	MAZAR	E		DRAWN BY	UNHCR SOM
SECTION/SHEET#	ARCHITECTURAL / 11	VILLAGE	FIRDAUSI	H		CHECKED BY	UNHCR SOM

LOCATION

PAPER SIZE: A4 (210 X 297)MM; A3 (297 X 420)MM; A2 (594 X 420)MM

SCALE: 1:50-30&20
UNIT: CM
DATE: 03/23/2020

IMPLEMENTER

APPROVER

UNHCR