Daikundi Returnee township Road site plan

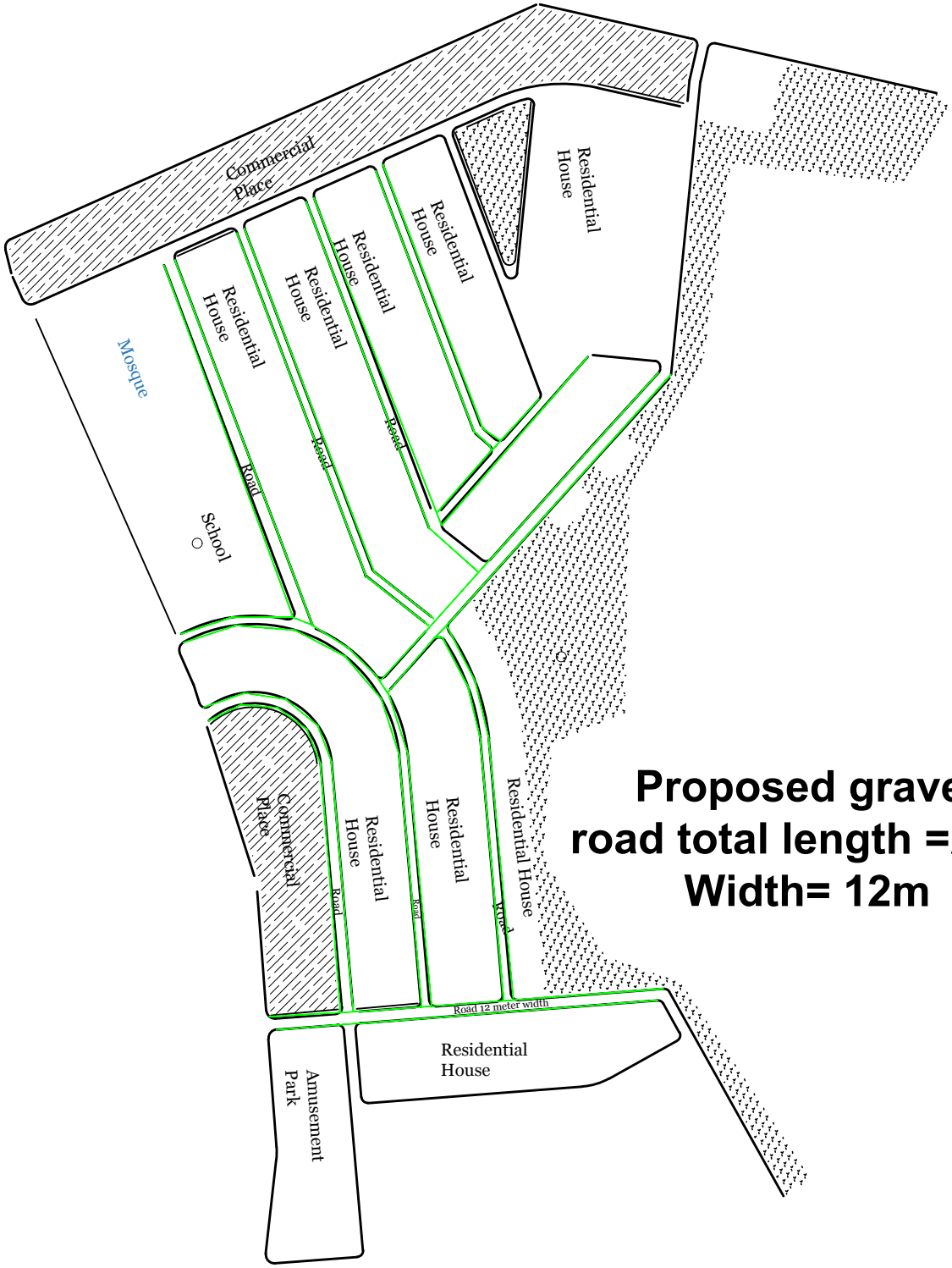

Proposed gravel road total length =2KM
Width= 12m

Funding Agency	Project title	2 Km road	Construction of 12 - 15 meter width road in Daikundi Returnee township	
	location	Daikundi		
	Duration	4 Month		
UNHCR			CAWC Engineering team	

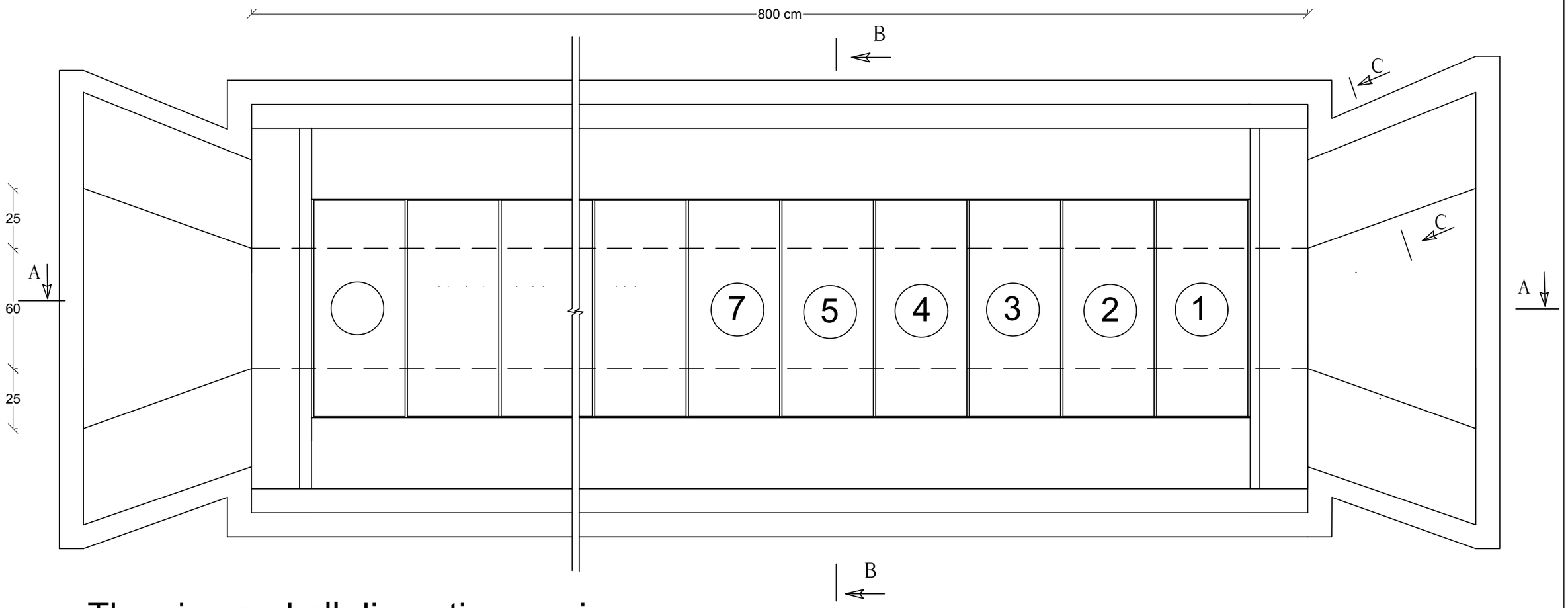

The size and all dimention are in cm

Plan View

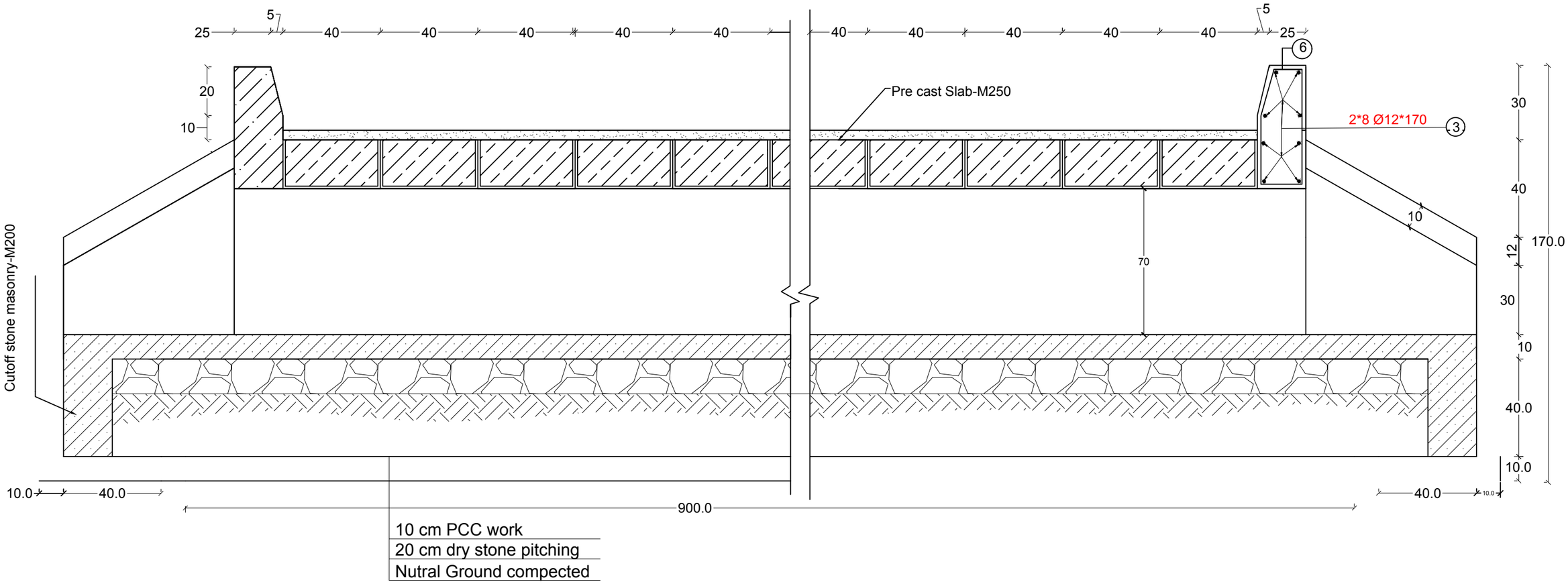

longtitud section A-A

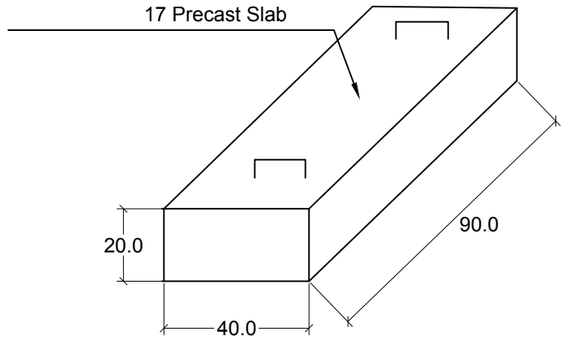

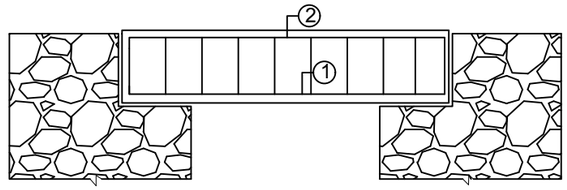

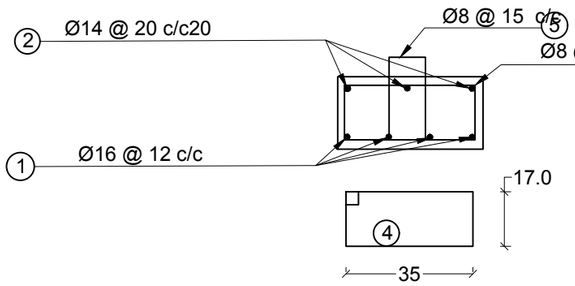

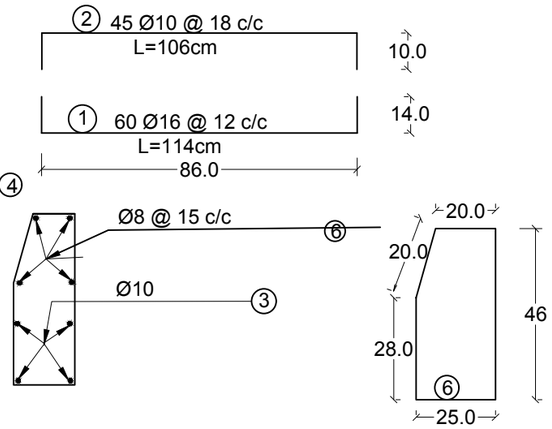

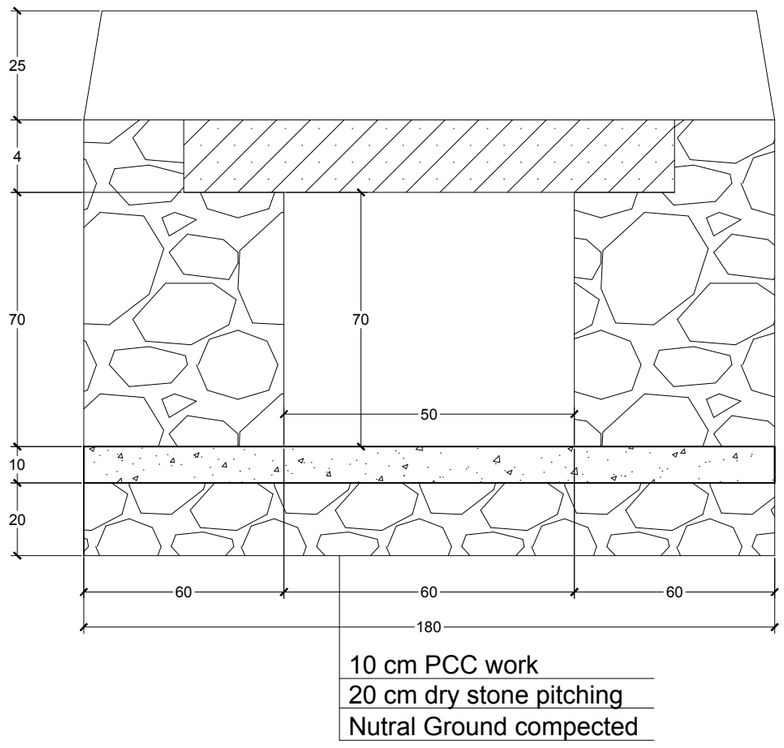

Section B-B

Note:

1. **All dimensions are in centimeters unless otherwise specified.**
2. **If rounded stone from a river or other sources is used shall not comprise of more then 30% of the total volume of stone and shall be evenly distributed throughout the wall.**
3. **All masonry work should be pointed.**
4. **Angle and length of wing wall should be adjusted by the engineer as per site conditions.**
5. **Refer to the bar schedule for the length and shape of reinforcement.**
6. **Concrete mix shall be proportioned by volume with a water / cement ratio of not more than 0.45.**
7. **The culvert should be contracted with a up stream of (2 - 4)%.**
8. **Concrete crashing strength 200kg/cm2. (M 200).**

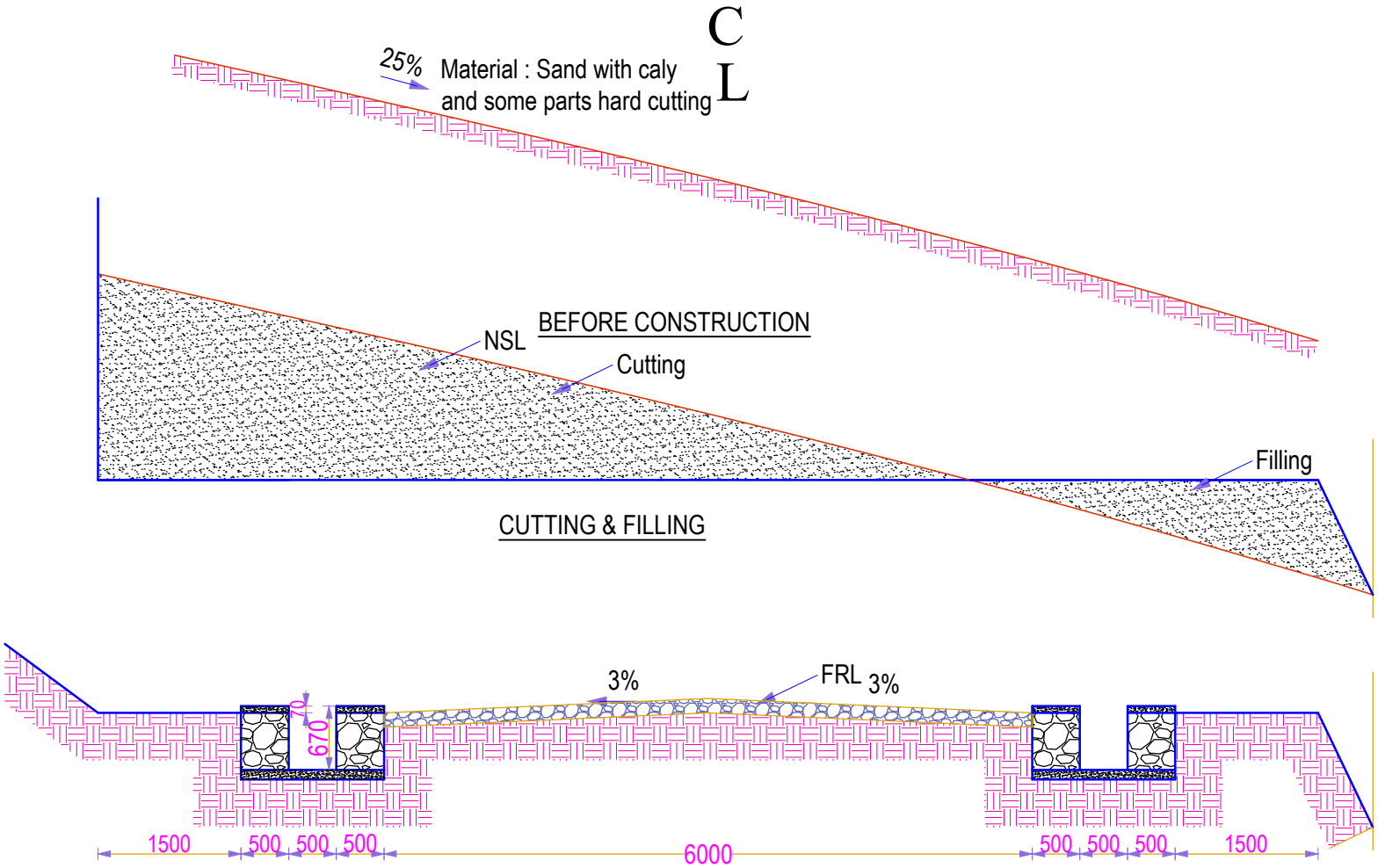

AFTER CONSTRUCTION

Part 1 =T L= 490m

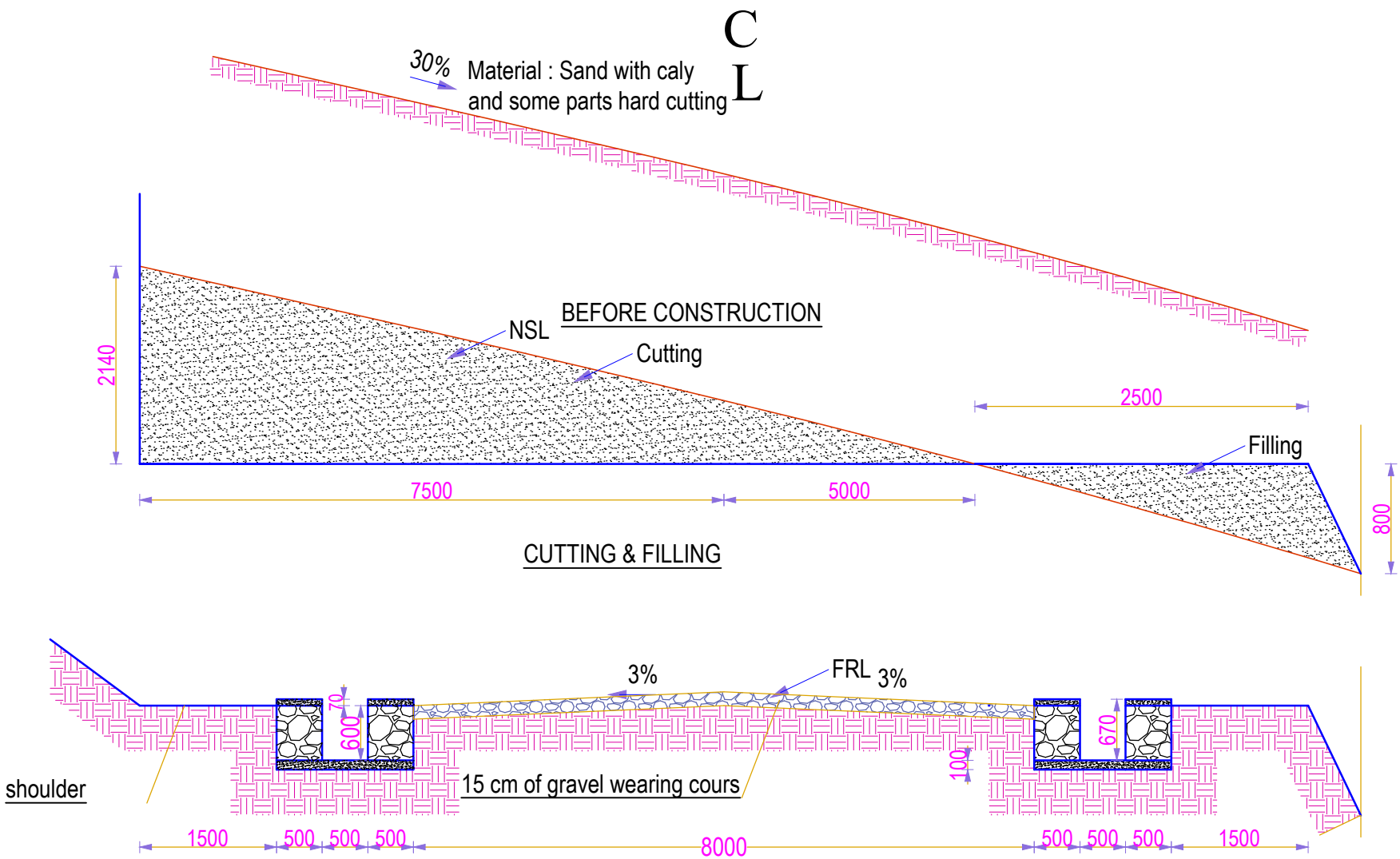
C
L
30%
Material : Sand with caly
and some parts hard cutting
BEFORE CONSTRUCTION
NSL
Cutting
2140
2500
Filling
7500
5000
800
CUTTING & FILLING
3%
FRL
3%
70
600
670
100
shoulder
15 cm of gravel wearing cours
1500
500
500
500
8000
500
500
500
1500
AFTER CONSTRUCTION
Part 2 =T L= 580 m

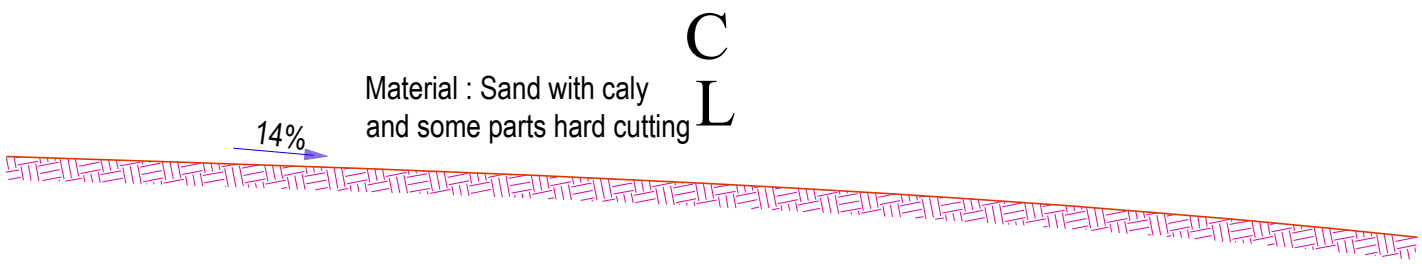

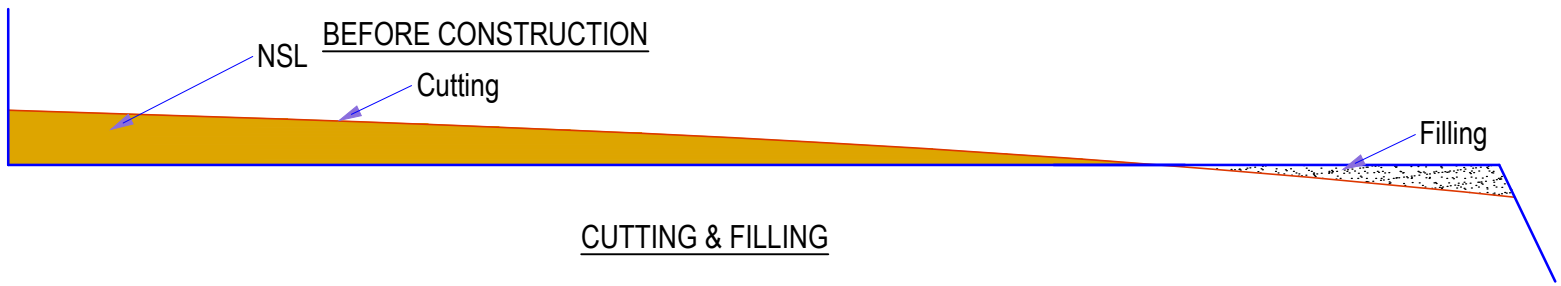

CUTTING & FILLING

CUTTING & FILLING

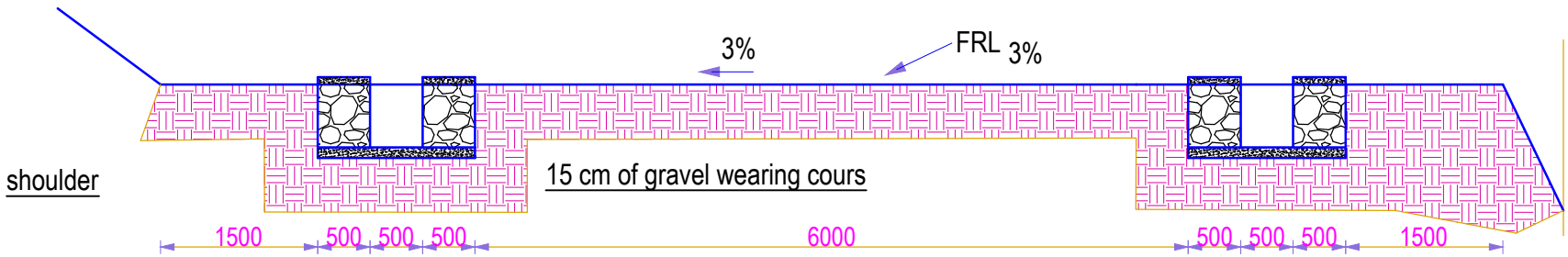

AFTER CONSTRUCTION

Part 3 =T L= 930 m